Altivar 32

Variable speed drives for synchronous and asynchronous motors

Programming Manual

07/2014

CÔNG TY CỔ PHẦN THIẾT BỊ ĐIỆN HOÀNG PHƯƠNG
ĐC: Số 10, ngõ 44, phố Võ Thị Sáu, P.Thanh Nhàn, Q.Hai Bà Trưng, TP. Hà Nội
MST: 0106798886
Tel: 024.3215.1322
Website: Hoangphuong.com.vn
Email:Codienhoangphuong@gmail.com

S1A28692

www.schneider-electric.com

The information provided in this documentation contains general descriptions and/or technical characteristics of the performance of the products contained herein. This documentation is not intended as a substitute for and is not to be used for determining suitability or reliability of these products for specific user applications. It is the duty of any such user or integrator to perform the appropriate and complete risk analysis, evaluation and testing of the products with respect to the relevant specific application or use thereof. Neither Schneider Electric nor any of its affiliates or subsidiaries shall be responsible or liable for misuse of the information contained herein. If you have any suggestions for improvements or amendments or have found errors in this publication, please notify us.

No part of this document may be reproduced in any form or by any means, electronic or mechanical, including photocopying, without express written permission of Schneider Electric.

All pertinent state, regional, and local safety regulations must be observed when installing and using this product. For reasons of safety and to help ensure compliance with documented system data, only the manufacturer should perform repairs to components.

When devices are used for applications with technical safety requirements, the relevant instructions must be followed.

Failure to use Schneider Electric software or approved software with our hardware products may result in injury, harm, or improper operating results.

Failure to observe this information can result in injury or equipment damage.

© 2014 Schneider Electric. All rights reserved.

Table of Contents

Safety Information 7

About the Book 8

General Overview 11

Chapter 1 **Software enhancements** 13
Software enhancements 14

Chapter 2 **Overview** 17
Factory configuration 18
Application functions 19
Basic functions 23
Graphic display terminal option 24
Powering up the drive for the first time 27
Remote display terminal option 30
Structure of the parameter tables 31
Finding a parameter in this document 32
Description of the HMI 33
Structure of the menus 34

Chapter 3 **Setup** 35
Steps for setting-up the drive 36
Preliminary recommendations 37

Programming 39

Chapter 4 **Reference Mode (rEF)** 41
Introduction 42
Organization tree 43
Menu 44

Chapter 5 **Monitoring Mode (MOn)** 45
Introduction 46
Organization tree 47
Menu 48
[MONIT. MOTOR] 48
[I/O MAP] 49
[MONIT. SAFETY] 52
[MONIT. FUN. BLOCKS] 53
[COMMUNICATION MAP] 54
[MONIT. PI] 60
[MONIT. POWER TIME] 60
[ALARMS] 61
[OTHER STATE] 62
[DIAGNOSTICS] 62
[PASSWORD] 73

Chapter 6 **Configuration Mode (ConF)** 75

Introduction 76
Organization tree 77
My Menu 78
Factory Settings 79
Macro Configuration 80
Full 83
[SIMPLY START] 83
[SETTINGS] 87
[MOTOR CONTROL] 102
[INPUTS / OUTPUTS CFG] 122
[COMMAND] 151
[FUNCTION BLOCKS] 155
[APPLICATION FUNCT.] (FUn-) 159
REFERENCE SWITCHING 164
REFERENCE OPERATIONS 165
RAMP 167
STOP CONFIGURATION 170
AUTO DC INJECTION 173
JOG 175
PRESET SPEEDS 177
+/- SPEED 181
+/- SPEED AROUND A REFERENCE 183
REFERENCE MEMORIZING 185
FLUXING BY LOGIC INPUT 186
BRAKE LOGIC CONTROL 188
EXTERNAL WEIGHT MEASUREMENT 196
HIGH SPEED HOISTING 198
PID REGULATOR 203
PID PRESET REFERENCES 211
TORQUE LIMITATION 212
2ND CURRENT LIMITATION 215
DYN CURRENT LIMIT 216
LINE CONTACTOR COMMAND 217
OUTPUT CONTACTOR COMMAND 219
POSITIONING BY SENSORS 221
PARAMETER SET SWITCHING 226
MULTIMOTORS / MULTICONFIGURATIONS 229
AUTO TUNING BY LOGIC INPUT 233
TRAVERSE CONTROL 234
[COMMUNICATION] 272
Access Level 276

Chapter 7 Interface (ItF) 277
Access Level (LAC) 278
Language (LnG) 280
Monitoring Configuration (MCF) 281
Display configuration (dCF) 285

Chapter 8 Open / Save as (trA) 293

Chapter 9 Password (COd) 297

Chapter 10 Multipoint Screen 299

Maintenance and Diagnostics 301

Chapter 11 Maintenance 303

Chapter 12 Diagnostics and Troubleshooting 305
Error code 306
Clearing the detected fault 306

Fault detection codes which require a power reset after the detected fault is cleared **307**
Fault detection codes that can be cleared with the automatic restart function after the cause has disappeared **309**
Fault detection codes that are cleared as soon as their cause disappears **312**
Option card changed or removed **312**
Control block changed **312**
Fault detection codes displayed on the remote display terminal **313**

Annex **315**

Chapter 13 Index of Functions **317**

Chapter 14 Index of Parameter Codes **319**

Safety Information

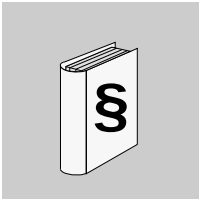

Important Information

NOTICE

Read these instructions carefully, and look at the equipment to become familiar with the device before trying to install, operate, or maintain it. The following special messages may appear throughout this documentation or on the equipment to warn of potential hazards or to call attention to information that clarifies or simplifies a procedure.

The addition of this symbol to a Danger or Warning safety label indicates that an electrical hazard exists, which will result in personal injury if the instructions are not followed.

This is the safety alert symbol. It is used to alert you to potential personal injury hazards. Obey all safety messages that follow this symbol to avoid possible injury or death.

⚠ DANGER

DANGER indicates an imminently hazardous situation, which, if not avoided, **will result** in death or serious injury.

⚠ WARNING

WARNING indicates a potentially hazardous situation, which, if not avoided, **can result** in death, serious injury, or equipment damage.

⚠ CAUTION

CAUTION indicates a potentially hazardous situation, which, if not avoided, **can result** in injury or equipment damage.

NOTICE

NOTICE**,** used without the safety alert symbol, indicates a potentially hazardous situation which, if not avoided, **can result** in equipment damage.

PLEASE NOTE

The word "drive" as used in this manual refers to the controller portion of the adjustable speed drive as defined by NEC.

Electrical equipment should be installed, operated, serviced, and maintained only by qualified personnel. No responsibility is assumed by Schneider Electric for any consequences arising out of the use of this product.

© 2013 Schneider Electric. All Rights Reserved.

About the Book

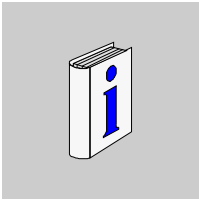

At a Glance

Document scope

The purpose of this document is to:

- help you to set-up the drive,
- show you how to program the drive,
- show you the different menus, modes and parameters,
- help you in maintenance and diagnostics.

Validity note

This documentation is valid for the Altivar 32 drive.

Related documents

Title of Documentation	Reference Number
ATV32 Quick Start	S1A41715
ATV32 Quick Start Annex	S1B39941
ATV32 Installation manual	S1A28686
ATV32 Communication Parameters	S1A44568
ATV32 Modbus manual	S1A28698
ATV32 PROFINET Manual	HRB25668
ATV32 CANopen manual	S1A28699
ATV32 PROFIBUS DP Manual	S1A28700
ATV32 Modbus TCP - EtherNet/IP Manual	S1A28701
ATV32 DeviceNet Manual	S1A28702
ATV32 EtherCAT Manual	S1A28703
ATV32 Atex manual	S1A45605
ATV32 Integrated safety Functions Manual	S1A45606
ATV32 ATV Logic Manual	S1B90747
BMP Synchronous motor manual	0198441113981
ATV32 other option manuals: see www.schneider-electric.com	

You can download the latest versions of these technical publications and other technical information from our website at www.schneider-electric.com.

Product related information

⚠ ⚠ DANGER

HAZARD OF ELECTRIC SHOCK, EXPLOSION OR ARC FLASH

- Only appropriately trained persons who are familiar with and understand the contents of this manual and all other pertinent product documentation and who have received safety training to recognize and avoid hazards involved are authorized to work on and with this drive system. Installation, adjustment, repair, and maintenance must be performed by qualified personnel.
- The system integrator is responsible for compliance with all local and national electrical code requirements as well as all other applicable regulations with respect to grounding of all equipment.
- Many components of the product, including the printed circuit boards, operate with mains voltage. Do not touch. Use only electrically insulated tools.
- Do not touch unshielded components or terminals with voltage present.
- Motors can generate voltage when the shaft is rotated. Before performing any type of work on the drive system, block the motor shaft to prevent rotation.
- AC voltage can couple voltage to unused conductors in the motor cable. Insulate both ends of unused conductors of the motor cable.
- Do not short across the DC bus terminals or the DC bus capacitors or the braking resistor terminals.
- Before performing work on the drive system:
  - Disconnect all power, including external control power that may be present.
  - Place a "Do Not Turn On" label on all power switches.
  - Lock all power switches in the open position.
  - Wait 15minutes to allow the DC bus capacitors to discharge. The DC bus LED is not an indicator of the absence of DC bus voltage that can exceed 800Vdc.
  - Measure the voltage on the DC bus between the DC bus terminals using a properly rated voltmeter to verify that the voltage is < 42Vdc.
  - If the DC bus capacitors do not discharge properly, contact your local Schneider Electric representative.
- Install and close all covers before applying voltage.

Failure to follow these instructions will result in death or serious injury.

⚠ DANGER

UNINTENDED EQUIPMENT OPERATION

- Read and understand this manual before installing or operating the Altivar 32 drive.
- Any changes made to the parameter settings must be performed by qualified personnel.

Failure to follow these instructions will result in death or serious injury.

⚠ WARNING

DAMAGE DRIVE EQUIPMENT

Do not operate or install any drive or drive accessory that appears damaged.

Failure to follow these instructions can result in death, serious injury, or equipment damage.

⚠ WARNING

LOSS OF CONTROL

- The designer of any control scheme must consider the potential failure modes of control paths and, for critical control functions, provide a means to achieve a safe state during and after a path failure. Examples of critical control functions are emergency stop, overtravel stop, power outage, and restart.
- Separate or redundant control paths must be provided for critical control functions.
- System control paths may include communication links. Consideration must be given to the implications of unanticipated transmission delays or failures of the link.
- Observe all accident prevention regulations and local safety guidelines.[1]
- Each implementation of the product must be individually and thoroughly tested for proper operation before being placed into service.

Failure to follow these instructions can result in death, serious injury, or equipment damage.

1. For USA: Additional information, refer to NEMA ICS 1.1 (latest edition), “Safety Guidelines for the Application, Installation, and Maintenance of Solid State Control” and to NEMA ICS 7.1 (latest edition), “Safety Standards for Construction and Guide for Selection, Installation and Operation of Adjustable Speed Drive Systems.”

⚠ CAUTION

INCOMPATIBLE LINE VOLTAGE

Before turning on and configuring the drive, ensure that the line voltage is compatible with the supply voltage range shown on the drive nameplate. The drive may be damaged if the line voltage is not compatible.

Failure to follow these instructions can result in injury or equipment damage.

CAUTION

RISK OF DERATED PERFORMANCE DUE TO CAPACITOR AGING

The product capacitor performances after a long time storage above 2 years can be degraded.
In that case, before using the product, apply the following procedure:

- Use a variable AC supply connected between L1 and L2 (even for ATV32●●●N4 references).
- Increase AC supply voltage to have:
  - 80% of rated voltage during 30 min
  - 100% of rated voltage for another 30 min

Failure to follow these instructions can result in equipment damage.

User comments

The word "drive" as used in this manual refers to the controller portion of the adjustable speed drive as defined by NEC.

Standards and Terminology

The technical terms, terminology, and the corresponding descriptions in this manual normally use the terms or definitions in the relevant standards.

In the area of drive systems this includes, but is not limited to, terms such as error, error message, failure, fault, fault reset, protection, safe state, safety function, warning, warning message, and so on.

Among others, these standards include:

- IEC 61800 series: Adjustable speed electrical power drive systems
- IEC 61508 Ed.2 series: Functional safety of electrical/electronic/programmable electronic safety-related
- EN 954-1 Safety of machinery - Safety related parts of control systems
- EN ISO 13849-1 & 2 Safety of machinery - Safety related parts of control systems.
- IEC 60204-1: Safety of machinery - Electrical equipment of machines – Part 1: General requirements

General Overview

I

What's in this Part?

This part contains the following chapters:

Chapter	Chapter Name	Page
1	Software enhancements	13
2	Setup	35
3	Overview	17

Software enhancements

1

What's in this Chapter?

This chapter contains the following topics:

Topic	Page
Enhancements made to version V1.8 IE 11 in comparison to V1.5 IE 08	14
Enhancements made to version V2.1 IE 15 in comparison to V1.8 IE 11	15
Enhancements made to version V2.3 IE 17 in comparison to V2.1 IE 15	15

Software enhancements

Since it was first marketed, the Altivar ATV 32 has been equipped with additional functions. Software version V2.1 IE 15 has now been updated to V2.3 IE 17. This documentation relates to version V2.3 IE 17.

The software version appears on the rating plate attached to the side of the drive.

Enhancements made to version V1.8 IE 11 in comparison to V1.5 IE 08

Added specification for hoisting application with the speed monitoring module VW3A3620.

New Functions and parameters

(Sdd-) [ENCODER FAULT] function page 260:

- (Sdd) [Load slip detection] page 260

(IEn-) [ENCODER CONFIGURATION] function page 133:

- (EnU) [Encoder usage] see page 132
- (EnS) [Encoder type] see page 132
- (PG1) [Number of pulses] see page 132
- (FAnF) [ANF Frequency Thd.] see page 133
- (LAnF) [ANF Detection level] see page 133
- (dAnF) [ANF Direction check] see page 134
- (tAnF) [ANF Time Thd.] see page 134

(I2t-) [DYN CURRENT LIMIT] function page 216:

- (I2tA) [I²t model activation] see page 216
- (I2t1) [max current of I²tl] see page 216
- (I2tt) [max time of I²tl] see page 216

(MOn-) [1.2 MONITORING] menu:

-

New parameters

(MOn-) [1.2 MONITORING] menu:

- (StFr) [Stator Frequency] see page 48
- (MMF) [Measured output fr.] see page 48
-
- (SPd1), (SPd2), (SPd3) [Cust. output value] see page 61
- (SFFE) [Safety fault reg.] added in the [MORE FAULT INFO] (AF1) function, see page 67
- (SAF1), (SAF2) [Safety fault Reg x] see page 67
- (SF00) to (SF11) [SAFF Subcode X] see page 68 to page 72
- (nt1) [IGBT alarm NB] see page 72
- (I2tM) [I²t overload level] see page 49

(CONF-) [1.3 CONFIGURATION] menu:

- (SdS) [Scale factor display] see page 101
- (rdAE) [% error EMF sync] see page 114
- (MSTP) [Memo Stop] see page 225
- (PrSt) [Priority restart] see page 225

New fault detection codes

- (SPF) [Speed fdback loss] see page 308
- (AnF) [Load slipping] see page 307

Enhancements made to version V2.1 IE 15 in comparison to V1.8 IE 11

New parameters

(CONF-) [1.3 CONFIGURATION] menu:

- (AI2L) [AI2 range] see page 131

Enhancements made to version V2.3 IE 17 in comparison to V2.1 IE 15

New parameters

(CONF-) [1.3 CONFIGURATION] menu:

- (HrFC) [Reset restricted fault configuration] see page 248
- (r1F) [Enable Relay1 fallback] see page 136
- (r2F) [Enable Relay2 fallback] see page 136

Overview

3

What's in this Chapter?

This chapter contains the following topics:

Topic	Page
Factory configuration	18
Application functions	19
Basic functions	23
Graphic display terminal option	24
Graphic display terminal option	24
Powering up the drive for the first time	27
Remote display terminal option	30
Structure of the parameter tables	31
Finding a parameter in this document	32
Description of the HMI	33
Structure of the menus	34

Factory configuration

Factory settings

The Altivar 32 is factory-set for common operating conditions:

- Display: drive ready **[Ready]** (rdY) when motor is ready to run and motor frequency when motor is running.
- The LI3 to LI6 logic inputs, AI2 and AI3 analog inputs, LO1 logic output, AO1 analog output, and R2 relay are unassigned.
- Stop mode when fault detected: freewheel.

Code	Description	Factory settings values	Page
bFr	**[Standard mot. freq]**	**[50Hz IEC]**	84
tCC	**[2/3 wire control]**	**[2 wire]** (2C): 2-wire control	83
Ctt	**[Motor control type]**	**[Standard]** (Std): standard motor law	102
ACC	**[Acceleration]**	3.0 seconds	85
dEC	**[Deceleration]**	3.0 seconds	85
LSP	**[Low speed]**	0 Hz	85
HSP	**[High speed]**	50 Hz	85
ItH	**[Mot. therm. current]**	Nominal motor current (value depending on drive rating)	85
SdC1	**[Auto DC inj. level 1]**	0.7 x nominal drive current, for 0.5 seconds	91
SFr	**[Switching freq.]**	4 kHz	92
Frd	**[Forward]**	**[LI1]** (LI1): Logic input LI1	123
rrS	**[Reverse assign.]**	**[LI2]** (LI2): Logic input LI2	123
Fr1	**[Ref.1 channel]**	**[AI1]** (AI1): Analog input AI1	151
r1	**[R1 Assignment]**	**[No drive flt]** (FLt): The contact opens when a fault is detected or when the drive has been switched off	135
brA	**[Dec ramp adapt.]**	**[Yes]** (YES): Function active (automatic adaptation of deceleration ramp)	169
Atr	**[Automatic restart]**	**[No]** (nO): Function inactive	249
Stt	**[Type of stop]**	**[Ramp stop]** (rMP): On ramp	170
CFG	**[Macro configuration]**	**[Start/Stop]** (StS)	80

Note: If you want to keep the drive presettings to a minimum, select the macro configuration **[Macro configuration]** (CFG) = **[Start/stop]** (StS) followed by **[Restore config.]** (FCS) = **[Config. CFG]** (In1). For more information, see page 80.

Check whether the values above are compatible with the application.

Application functions

The tables on the following pages show the combinations of functions and applications, in order to guide your selection.

The applications in these tables relate to the following machines, in particular:

- **Hoisting**: cranes, overhead cranes, gantries (vertical hoisting, translation, slewing), lifting platforms
- **Handling**: palletizers/depalletizers, conveyors, roller tables
- **Packing**: carton packers, labeling machines
- **Textiles**: weaving looms, carding frames, washing machines, spinners, drawing frames
- **Wood**: automatic lathes, saws, milling
- **Process**

Each machine has its own special features, and the combinations listed here are neither mandatory nor exhaustive.

Some functions are designed specifically for a particular application. In this case, the application is identified by a tab in the margin on the relevant programming pages.

Motor control functions

Functions	Page	Applications					
		Hoisting	Handling	Packing	Textiles	Wood	Process
V/f ratio	102		■			■	
Sensorless flux vector control	102	■	■	■	■	■	■
2-point vector control	102	■			■		
Open-loop synchronous motor	102				■		
Output frequency up to 599 Hz	102				■	■	
Motor overvoltage limiting	117				■	■	
DC bus connection (see Installation manual)	-				■		■
Motor fluxing using a logic input	186	■	■	■			
Switching frequency of up to 16 kHz	92				■	■	
Auto-tuning	85	■	■	■	■	■	■

Functions on speed references

Functions	Page	Applications					
		Hoisting	Handling	Packing	Textiles	Wood	Process
Differential bipolar reference	126	■	■	■			
Reference delinearization (magnifying glass effect)	129	■	■				
Frequency control input	151				■		■
Reference switching	164			■			
Reference summing	165			■			
Reference subtraction	165			■			
Reference multiplication	165			■			
Adjustable profile ramp	167	■	■				
Jog operation	175		■		■		■
Preset speeds	177	■	■	■			
+ speed / - speed using single action pushbuttons (1 step)	181						■
+ speed / - speed using double action pushbuttons (2 steps)	181	■					
+/- speed around a reference	184				■		■
Save reference	185						■

Application-Specific functions

Functions	Page	Applications					
		Hoisting	Handling	Packing	Textiles	Wood	Process
Fast stop	170					■	
Brake control	188	■	■				
Load measurement	196	■					
High-speed hoisting	198	■					
Rope slack	201	■					
PID regulator	203						■
Motor/generator torque limit	212		■		■		■
Load sharing	119	■	■				
Line contactor control	217	■	■			■	
Output contactor control	220	■					
Positioning by limit switches or sensors	221	■	■	■			
Stop at distance calculated after deceleration limit switch	223		■	■			
Parameter switching	226	■	■	■	■	■	■
Motor or configuration switching	229	■	■	■			
Traverse control	234				■		
Stop configuration	170		■		■	■	
Safety Integrated functions (see related documents page 8)		■	■	■	■	■	■

Safety functions/Fault management

Functions	Page	Applications					
		Hoisting	Handling	Packing	Textiles	Wood	Process
Safe Torque Off (STO) (Safety function, see dedicated document)	-	■	■	■	■	■	■
Deferred stop on thermal alarm	255	■					■
Alarm handling	142	■	■	■	■	■	■
Fault management	247	■	■	■	■	■	■
IGBT tests	257	■	■	■	■	■	■
Catch a spinning load	250				■	■	
Motor protection with PTC probes	247	■	■	■	■	■	■
Undervoltage management	256				■	■	
4-20 mA loss	257	■	■		■	■	■
Uncontrolled output cut (output phase loss)	253		■				
Automatic restart	249		■				
Use of the "Pulse input" input to measure the speed of rotation of the motor	262	■	■				
Load variation detection	264	■					
Underload detection	267						■
Overload detection	269						■
Safety Integrated functions (see related documents page 8)			■	■	■	■	■

Basic functions

Drive ventilation

The fan starts automatically when the drive thermal state reaches 70% of the maximum thermal state and if the **[Fan Mode]** (FFM) is set to **[Standard]** (Std).

Graphic display terminal option

Description of the graphic display terminal

With the graphic display terminal, which works with FLASH V1.1IE26 or higher, it is possible to display more detailed information than can be shown on the integrated display terminal.

1 Graphic display

2 Function keys F1, F2, F3, F4, see page 154

3 STOP/RESET key

4 RUN key

7 ESC key: Aborts a value, a parameter or a menu to return to the previous selection

6 Key for reversing the direction of rotation of the motor

5 Jog dial:

- Press (ENT):
  - To save the current value
  - To enter the selected menu or parameter
- Turn +/-:
  - To increment or decrement a value
  - To go to the next or previous line
  - To increase or decrease the reference if control via the graphic display terminal is activated

Note: Keys **3**, **4**, **5** and **6** can be used to control the drive directly, if control via the graphic display terminal is activated.

To activate the keys on the remote display terminal, you first have to configure **[Ref.1 channel]** (Fr1) = **[HMI]** (LCC). For more information, see page 151.

Example configuration windows:

Single selection

When powering up the graphic display terminal for the first time, the user has to select the required language.

When only one selection is possible, the selection made is indicated by ✓ .
Example: Only one language can be chosen.

Multiple selection

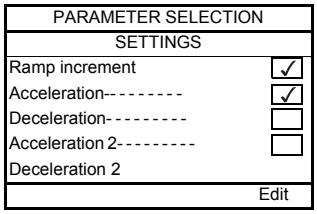

When multiple selection is possible, the selections made are indicated by ✓ .
Example: A number of parameters can be chosen to form the **[USER MENU]**.

Example configuration window for one value:

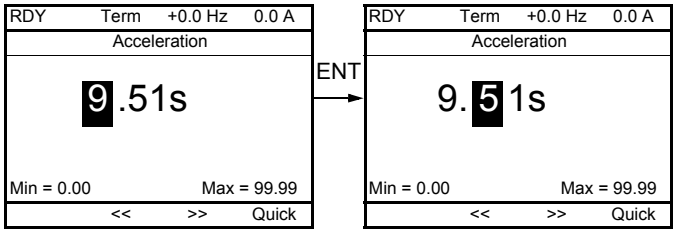

The << and >> arrows (keys F2 and F3) are used to select the digit to be modified, and the jog dial is rotated to increase or decrease this number.

Example visualization of function blocks state:

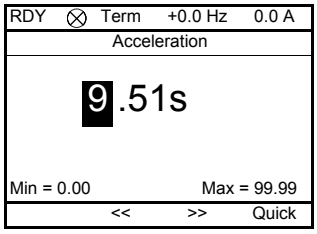

⊗ OFF light: A valid function blocks program is in the ATV32 in stop mode.

⊗ ON light: A valid function blocks program is in the ATV32 in run mode. The drive is considered as being in running state and configuration parameters cannot be modified.

Powering up the drive with Graphic display terminal for the first time

When powering up the graphic display terminal for the first time, the user has to select the required language.

```
LANGUAGE
English
Français                ✓
Deutsch
Italiano
Español

Chinese
Русский
Türkçe
```

Display after the graphic display terminal has been powered up for the first time. Select the language and press ENT.

↓ ENT

```
Schneider Electric
ATV32HU15M2
1.5kW/2HP  220V Single

Config. n°0
```

The drive's rating details will now appear.

↓ 3 seconds

```
RDY     Term    0.0 Hz    0.0 A
ACCESS LEVEL
Basic
Standard                  ✓
Advanced
Expert
```

↓ ENT

```
RDY     Term    0.0 Hz    0.0 A
1 DRIVE MENU
1.1 SPEED REFERENCE
1.2 MONITORING
1.3 CONFIGURATION

Code    <<      >>        Quick
```

Powering up the drive for the first time

With the integrated display terminal, when powering up the drive for the first time, the user immediately accesses to **[Standard mot. freq]** (bFr) (see page 84) in the menu (COnF > FULL > SIM).

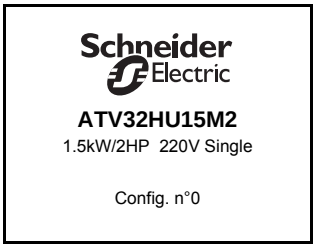

Display after the drive has been powered up for the first time.

↓ 3 seconds

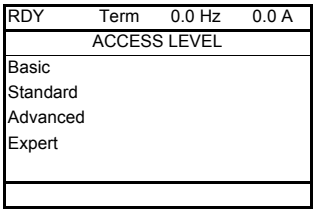

The **[ACCESS LEVEL]** screen follows automatically.

↓ ENT

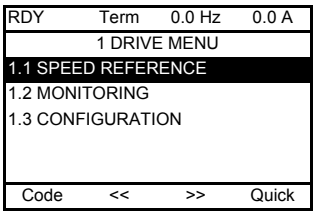

Automatically switches to the **[1 DRIVE MENU]** menu after 3 seconds.
Select the menu and press ENT.

↓ ESC

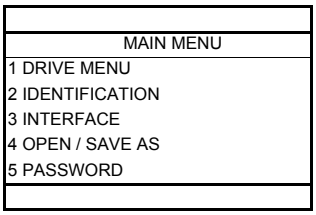

The MAIN MENU appears on the graphic display terminal if you press the ESC key.

Subsequent power-ups

With the integrated display terminal, at subsequent power-ups of the drive for the first time, the user immediately accesses to the drive state (Same liste than **[Drive state]** (HS I) page 63). Example : Ready (rdY).

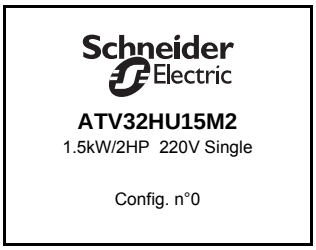

Display after powering up.

3 seconds

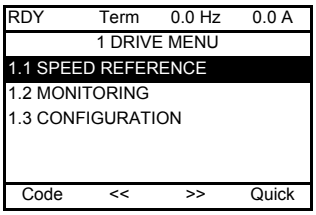

Automatically switches to the **[1 DRIVE MENU]** menu after 3 seconds.
Select the menu and press ENT.

10 seconds

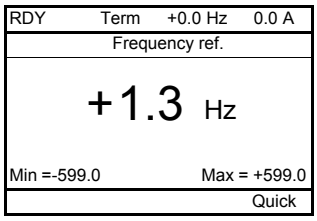

Automatically switches to the monitoring screen after 10 seconds.

Identification menu

The **[IDENTIFICATION]** (0 Id -) menu can only be accessed on the graphic display terminal.

This is a read-only menu that cannot be configured. It enables the following information to be displayed:

- Drive reference, power rating and voltage
- Drive software version
- Drive serial number
- Safety function status and checksum
- Function blocks program and catalogue version
- Type of options present, with their software version
- Graphic display terminal type and version

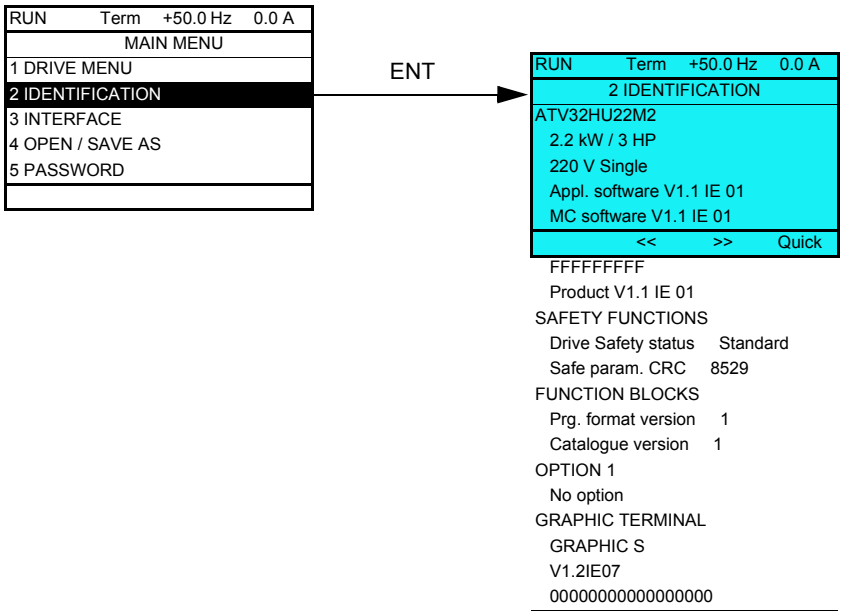

Remote display terminal option

Description of the remote display terminal

This remote display terminal is a local control unit which can be mounted on the door of the wall-mounted or floor-standing enclosure. It has a cable with connectors, which is connected to the drive serial link (see the documentation supplied with the remote display terminal). With this remote display terminal, up and down arrows are used for navigation rather than a jog dial.

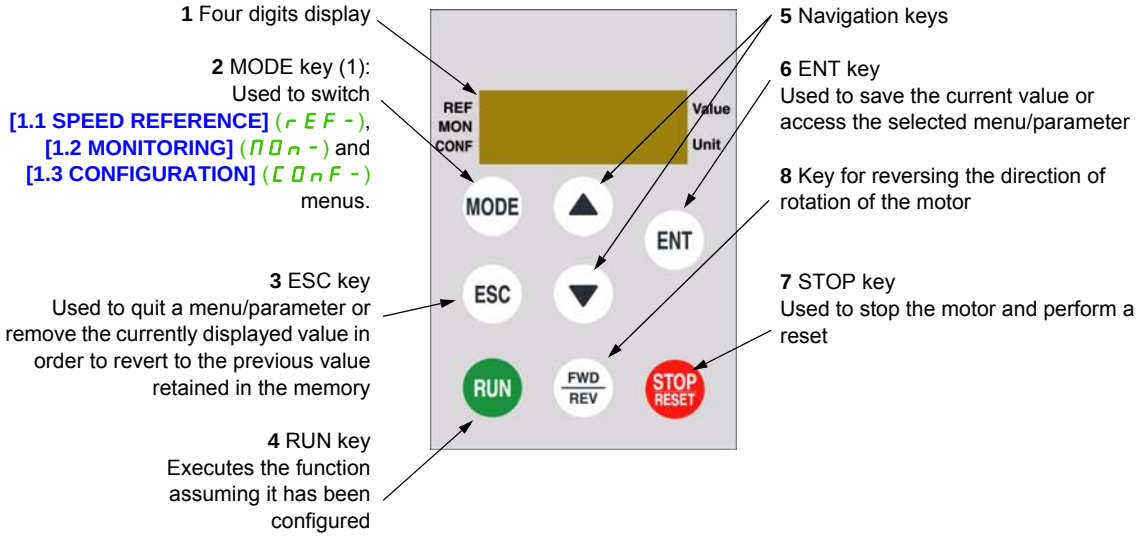

(1) If the drive is locked by a code (**[PIN code 1]** (COd) page 298), pressing the MODE key enables you to switch from the **[1.2 MONITORING]** (MOn-) menu to the **[1.1 SPEED REFERENCE]** (rEF-) menu and vice versa.

To activate the keys on the remote display terminal, you first have to configure **[Ref.1 channel]** (Fr1) = **[HMI]** (LCC). For more information, see page 151.

Structure of the parameter tables

The parameter tables contained in the descriptions of the various menus are organized as follows.

Example:

Parameters described in this page can be accessed by: DRI- > CONF > FULL > FUN-

Code	Name / Description	Adjustment range	Factory setting
PId-	**[PID REGULATOR]** **Note**: This function cannot be used with certain other functions. Follow the instructions on page 159.		
PIF	**[PID feedback ass.]**		**[No]** (nO)
nO	**[No]** (nO): Not assigned		
AI1	**[AI1]** (AI1): Analog input A1		
AI2	**[AI2]** (AI2): Analog input A2		
AI3	**[AI3]** (AI3): Analog input A3		
PI	**[RP]** (PI): Pulse input		
AIU2	**[AI virtual 2]** (AIU2): Virtual analog input 2		
OAO1	**[OA01]** (OAO1): Function blocks: Analog Output 01		
...	**...**		
OA10	**[OA10]** (OA10): Function blocks: Analog Output 10		

1. Way to access the parameters described in this page
2. Submenu code on 4-digit 7-segment display
3. Parameter code on 4-digit 7-segment display
4. Parameter value on 4-digit 7-segment display
5. Name of submenu on graphic display terminal
6. Name of parameter on graphic display terminal
7. Value of parameter on graphic display terminal

Note: The text in square brackets **[ ]** indicates what you will see on the graphic display terminal.

A menu followed by the mention "**(continued)**" appears sometimes to locate you in the structure.

Example:

FUn-	**[APPLICATION FUNCT.] (continued)**
PId-	**[PID REGULATOR]** **Note**: This function cannot be used with certain other functions. Follow the instructions on page 159.

In this case, the mention "**(continued)**" indicates that the **[APPLICATION FUNCT.]** submenu is above the **[PID REGULATOR]** submenu in the structure.

A parameter can contain some pictograms. Each pictogram has its legend at the end of the table.

Main mictograms:

★ These parameters only appear if the corresponding function has been selected in another menu. When the parameters can also be accessed and adjusted from within the configuration menu for the corresponding function, their description is detailed in these menus, on the pages indicated, to aid programming.

Parameter that can be modified during operation or when stopped.

2 s To change the assignment of this parameter, press the ENT key for 2 s.

Finding a parameter in this document

The following assistance with finding explanations on a parameter is provided:

- With the integrated display terminal and the remote display terminal: Direct use of the parameter code index, page 319, to find the page giving details of the displayed parameter.
- With the graphic display terminal: Select the required parameter and press F1 (F1) : **[Code]**. The parameter code is displayed instead of its name while the key is held down.

Example: ACC

RDY	Term	+0.0 Hz	0.0 A
SETTINGS			
Ramp increment	:		0.1
Acceleration	:		9.51 s
Deceleration	:		9.67 s
Low speed	:		0.0 Hz
High speed	:		50.0 Hz
Code	<<	>>	Quick

Code →

RDY	Term	+0.0 Hz	0.0 A
SETTINGS			
Ramp increment	:		0.1
ACC	:		9.51 s
Deceleration	:		9.67 s
Low speed	:		0.0 Hz
High speed	:		50.0 Hz
Code	<<	>>	Quick

- Then use the parameter code index, page 319, to find the page giving details of the displayed parameter.

Description of the HMI

Functions of the Display and the Keys

1 The **ESC** key is used for menu navigation (backward) and parameters adjustment (cancel)

2 The **Jog dial** is used for menu navigation (up or down) and parameters adjustment (increase/decrease value or element choice). It can be used as Virtual analogic input 1 for drive frequency reference.

3 The **ENT** key (push on the Jog dial) is used for menu navigation (forward) and parameters adjustment (validate)

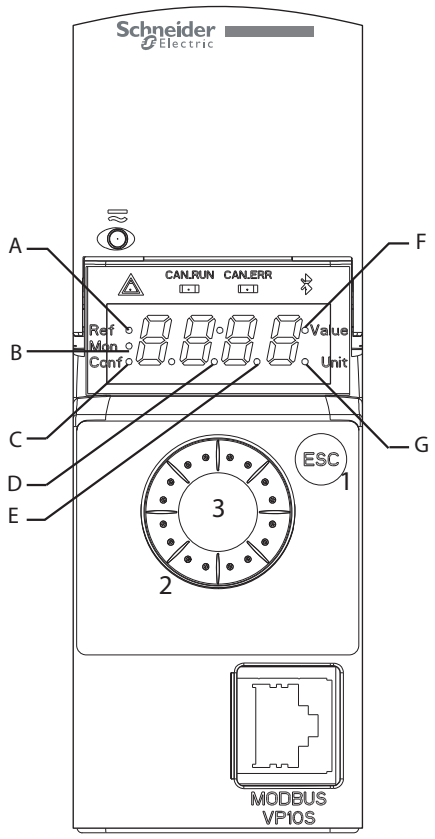

A	REF mode selected (rEF-)	E	Dot used to display parameter value (1/10 unit)
B	MON mode selected (MOn-)	F	Current display is parameter value
C	CONF mode selected (COnF)	G	Current display is parameter unit
D	Dot used to display parameter value (1/100 unit)		

Normal display, with no fault code displayed and no startup:
Displays the parameter selected in the **[1.2 MONITORING]** (MOn-) menu (default: **[Frequency ref.]** (FrH)).

- In It: Initialization sequence (only on remote display terminal)
- tUN: AutoTuning
- dCb: Injection braking
- rdY: Drive ready
- nSt: Freewheel stop control
- CL1: Current limit
- FSt: Fast stop
- FLU: Fluxing function is activated
- nLP: Control is powered on but the DC bus is not loaded
- CtL: Controlled stop
- Obr: Adapted deceleration
- SOC: Stand by output cut
- USA: Undervoltage alarm
- SS1: Safety SS1 level
- SLS: Safety SLS level
- StO: Safety STO level

In the event of a detected fault, the display will flash to notify the user accordingly. If a graphic display terminal is connected, the name of the detected fault will be displayed.

Structure of the menus

Powering up		Parameter selection
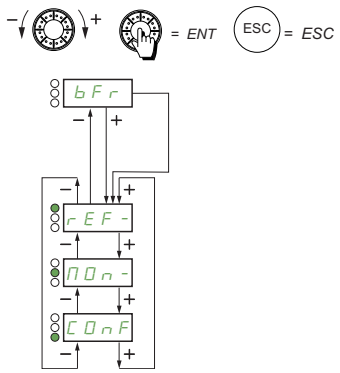	This parameter is only visible when the drive is powered up for the first time. The setting can be amended subsequently in the menu **[MOTOR CONTROL]** (drC-) for **[Standard mot. freq]** (bFr) **[1.1 SPEED REFERENCE]** (rEF-) **[1.2 MONITORING]** (MON-) **[1.3 CONFIGURATION]** (CONF)	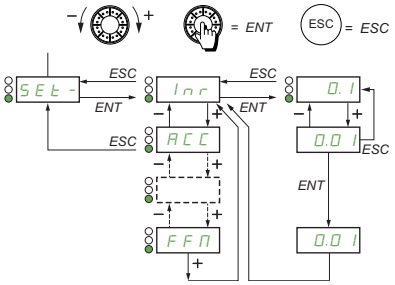

On the 7-segment display, a dash after menu and submenu codes is used to differentiate them from parameter codes.

Example: **[APPLICATION FUNCT.]** (FUn-) menu, **[Acceleration]** (ACC) parameter

Selection of multiple assignments for one parameter

Example: List of group 1 alarms in **[INPUTS / OUTPUTS CFG]** (I_O-) menu

A number of alarms can be selected by "checking" them as follows.

The digit on the right indicates:

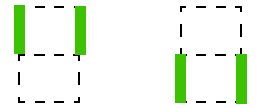

The same principle is used for all multiple selections.

Setup

2

What's in this Chapter?

This chapter contains the following topics:

Topic	Page
Steps for setting-up the drive	36
Preliminary recommendations	37

Steps for setting-up the drive

INSTALLATION

1. Please refer to the installation manual.

PROGRAMMING

2. Apply input power to the drive, but do not give a run command.

3. Configure:

- The nominal frequency of the motor **[Standard mot. freq]** (bFr) page 84 if this is not 50 Hz.
- The motor parameters in the **[MOTOR CONTROL]** (drC-) menu, page 102, only if the factory configuration of the drive is not suitable.
- The application functions in the **[INPUTS / OUTPUTS CFG]** (I_O-) menu, page 122, the **[COMMAND]** (CtL-) menu, page 151, and the **[APPLICATION FUNCT.]** (FUn-) menu, page 164, only if the factory configuration of the drive is not suitable.

4. In the [SETTINGS] (SEt-) menu, adjust the following parameters:

- **[Acceleration]** (ACC), page 85 and **[Deceleration]** (dEC), page 85.
- **[Low speed]** (LSP), page 85 and **[High speed]** (HSP), page 87.
- **[Mot. therm. current]** (ItH), page 85.

5. Start the drive.

Tips:

- Before beginning programming, complete the customer setting tables, page 319.
- Use the **[Restore config.]** (FCS) parameter, page 79, to return to the factory settings at any time.
- To locate the description of a function quickly, use the index of functions page 317.
- Before configuring a function, read carefully the "Function compatibility" section page 162.

Note: The following operations must be performed for optimum drive performance in terms of accuracy and response time:

- Enter the values indicated on the motor rating plate in the **[MOTOR CONTROL]** (drC-) menu, page 102.
- Perform auto-tuning with the motor cold and connected using the **[Auto-tuning]** (tUn) parameter, page 85.

Preliminary recommendations

Before powering up the drive

⚠ DANGER

UNINTENDED EQUIPMENT OPERATION

Read and understand this manual before installing or operating the ATV32 drive.
Any changes made to the parameter settings must be performed by qualified personnel.
Check that all logic inputs are inactive to avoid any unintended operation.

Failure to follow these instructions will result in death or serious injury.

Start-up

Note: When factory settings apply and during power-up/manual reset or after a stop command, the motor can only be powered once the "forward", "reverse" and "DC injection stop" commands have been reset. If they have not been reset, the drive will display **[Freewheel stop]** (nSt) but will not start. If the automatic restart function has been configured (**[Automatic restart]** (Atr) parameter in the **[FAULT MANAGEMENT]** (FLt-) menu, page 247), these commands are taken into account without a reset (to zero) being necessary.

Line contactor

CAUTION

RISK OF DAMAGE TO DRIVE

Frequent use of the contactor will cause premature aging to the charge circuit of the filter capacitors.
Do not power-up the drive less than every 60 seconds.

Failure to follow these instructions can result in equipment damage.

Using a motor with a lower rating or dispensing with a motor altogether

With the factory settings, motor output phase loss detection is active (**[Output Phase Loss]** (OPL) = **[Yes]** (YES), page 253). To avoid having to use a motor with the same rating as the drive when testing the drive or during a maintenance phase, deactivate the motor output phase loss detection (**[Output Phase Loss]** (OPL) = **[No]** (nO)). This can prove particularly useful if very large drives are being tested with a small motor.

Set **[Motor control type]** (Ctt), page 102, to **[Standard]** (Std) in **[Motor control menu]** (drC-).

CAUTION

RISK OF DAMAGE TO THE MOTOR

Motor thermal protection will not be provided by the drive if the motor 's nominal current is 20% lower than that of the drive.
In this case, find an alternative source of thermal protection.

Failure to follow these instructions can result in equipment damage.

⚠ ⚠ DANGER

HAZARD OF ELECTRIC SHOCK, EXPLOSION OR ARC FLASH

If **[Output Phase Loss]** (OPL) is set to **[No]** (nO), Loss of cable is not detected.
Check that this action will not endanger personnel or equipment in any way.

Failure to follow these instructions will result in death or serious injury.

Programming

II

What's in this Part?

This part contains the following chapters:

Chapter	Chapter Name	Page
4	Reference Mode (rEF)	41
5	Monitoring Mode (MOn)	45
6	Configuration Mode (ConF)	75
7	Interface (ItF)	277
8	Open / Save as (trA)	293
9	Password (COd)	297
10	Multipoint Screen	299

Reference Mode (rEF)

4

What's in this Chapter?

This chapter contains the following topics:

Topic	Page
Introduction	42
Organization tree	43
Menu	44

Introduction

Use the reference mode to monitor and, if the reference channel is the analog input 1 (**[Ref.1 channel]** (Fr1) page 151 set to **[AI virtual 1]** (AIU1)), adjust the actual reference value by modifying the analog input voltage value.

If local control is enabled (**[Ref.1 channel]** (Fr1) page 151 set to **[HMI]** (LCC)), the jog dial on the remote display terminal or the Up/Down Navigation keys on the remote display terminal acts as a potentiometer to change the reference value up and down within the limits preset by other parameters (**[Low speed]** (LSP) or **[High speed]** (HSP)).

There is no need to press the ENT key to confirm the change of the reference.

Organization tree

(1) Depending on the active reference channel

Possible values:
(AIU1)
(LFr)
(MFr)
(rPI)
(FrH)
(rPC)

(2) 2 s or ESC

Displayed parameter value and unit of the diagram are given as examples.

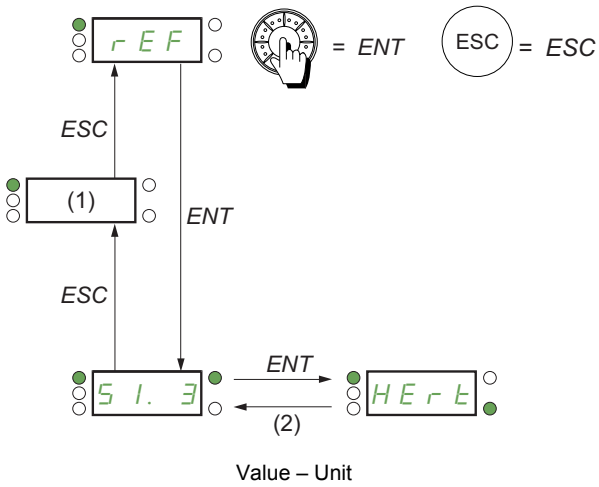

Parameters described in this page can be accessed by: DRI- > REF-

Menu

Code	Name / Description	Adjustment range	Factory setting
dr I-	**[1 DRIVE MENU]**		
rEF-	**[1.1 SPEED REFERENCE]** Displayed parameters depend on drive settings.		
AIU1 ★ (1)	**[Image input AIV1]** First virtual AI value. This parameter allows to modify the frequency reference with the embedded jog dial.	0 to 100% of HSP-LSP	0%
LFr ★ (1)	**[HMI Frequency ref.]** HMI frequency reference (signed value). This parameter allows to modify the frequency reference with the remote HMI.	-599 to +599 Hz	0 Hz
MFr ★	**[Multiplying coeff.]** Multiply frequency variable. Multiplying coefficient, can be accessed if **[Multiplier ref.-]** (MA2,MA3) page 166 has been assigned to the graphic terminal.	0 to 100%	100%
rPI ★ (1)	**[Internal PID ref.]** PID: Internal reference PI. This parameter allows to modify the PID internal reference with the jog dial. Internal PID reference is visible if **[PID feedback]** (PIF) is not set to **[No]** (nO).	0 to 32,767	150
FrH ★	**[Frequency ref.]** Frequency reference before ramp (signed value). Actual frequency reference applied to the motor regardless of which reference channel has been selected. This parameter is in read-only mode. Frequency reference is visible if the command channel is not HMI or virtual AI.	-599 to +599 Hz	-
rPC ★	**[PID reference]** PID: Setpoint value. PID reference is visible if **[PID feedback]** (PIF) is not set to **[No]** (nO).	0 to 65,535	-

(1) It is not necessary to press the ENT key to confirm the modification of the reference.

★ These parameters only appear if the corresponding function has been selected in another menu. When the parameters can also be accessed and adjusted from within the configuration menu for the corresponding function, their description is detailed in these menus, on the pages indicated, to aid programming.

Parameter that can be modified during operation or when stopped.

Monitoring Mode (MOn)

5

What's in this Chapter?

This chapter contains the following topics:

Topic	Page
Introduction	46
Organization tree	47
Menu	48

Introduction

The parameters can be accessed when the drive is running or stopped.

Some functions have numerous parameters. In order to clarify programming and avoid having to scroll through endless parameters, these functions have been grouped in submenus. Like menus, submenus are identified by a dash after their code.

When the drive is running, the value displayed is one of the monitoring parameters. By default, the value displayed is the input frequency reference (**[Frequency ref.]** (FrH) parameter page 48).

While the value of the new monitoring parameter required is being displayed, press a second time on the jog dial key to display the units or press and hold down the jog dial (ENT) again (for 2 seconds) to confirm the change of monitoring parameter and store it. From then on, it is the value of this parameter that will be displayed during operation (even after powering down).

Unless the new choice is confirmed by pressing and holding down ENT again, the display will revert to the previous parameter after powering down.

Note: After the drive has been turned off or following a loss of line supply, the parameter displayed is the drive status (example: **[Ready]** (rdY)). The selected parameter is displayed following a run command.

Organization tree

Displayed parameters of the diagram are given as examples.

(1) Visible only with graphic display terminal

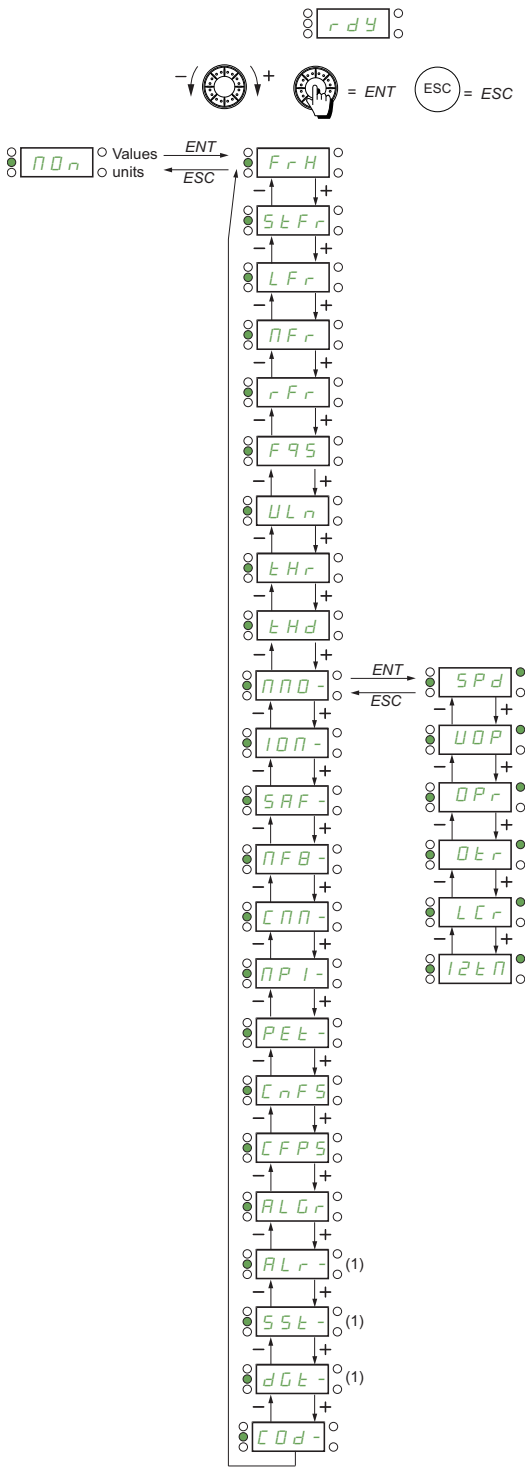

Parameters described in this page can be accessed by: DRI- > MON-

Menu

Code	Name / Description	Unit
MOn-	**[1.2 MONITORING]**	
AIU1	**[Image input AIV1]** First virtual AI value. This parameter is read-only. It enables you to display the speed reference applied to the motor.	%
FrH	**[Frequency ref.]** Frequency reference before ramp (signed value). This parameter is read-only. It enables you to display the speed reference applied to the motor, regardless of which reference channel has been selected.	Hz
StFr	**[Stator Frequency]** Displays the estimated stator frequency in Hz (signed value)	Hz
LFr	**[HMI Frequency ref.]** HMI frequency reference (signed value). This parameter only appears if the function has been enabled. It is used to change the speed reference from the remote control. ENT does not have to be pressed to enable a change of reference.	Hz
MFr ★	**[Multiplying coeff.]** Multiply frequency variable. Multiplying coefficient, can be accessed if **[Multiplier ref. -]** (MA2, MA3) page 166 has been assigned.	%
MMF	**[Measured output fr.]** Measured motor frequency (signed value) The measured motor speed is displayed if the speed monitoring card has been inserted. (VW3A3620)	Hz
rFr	**[Output frequency]** Estimated motor frequency (signed value).	Hz
F95 ★	**[Pulse in. work. freq.]** Measured frequency of the "Pulse input" input (see page 262).	Hz
ULn	**[Mains voltage]** Main voltage (from DC bus). Line voltage based on DC bus measurement, motor running or stopped.	V
tHr	**[Motor thermal state]** Motor thermal state. 100% = Nominal thermal state, 118% = "OLF" threshold (motor overload).	%
tHd	**[Drv.thermal state]** Drive thermal state. 100% = Nominal thermal state, 118% = "OHF" threshold (drive overload).	%
MMO-	**[MONIT. MOTOR]**	
SPd	**[Motor speed]** Motor speed in rpm. (Estimated value)	rpm
UOP	**[Motor voltage]** Motor voltage. (Estimated value)	V
OPr	**[Motor power]** Output power monitoring (100% = nominal motor power, estimated value based on current measure).	%
Otr	**[Motor torque]** Output torque value (100% = nominal motor torque, estimated value based on current measure).	%
LCr	**[Motor current]** Estimated motor current. (Value measured)	A

Parameters described in this page can be accessed by: DRI- > MON- > IOM- > LIA-

Code	Name / Description	Unit
MOn-	**[1.2 MONITORING] (continued)**	
MMO-	**[MONIT. MOTOR]**	
I2tM	**[I²t overload level]** Monitoring of I²t overload level This parameter can be accessed if **[I²t model activation]** (I2tA) is set to **[Yes]** (YES) see page 216	%
IOM-	**[I/O MAP]**	
LIA-	**[LOGIC INPUT CONF.]** Logic input functions.	
LIA	**[LI1 assignment]** Read-only parameters, cannot be configured. It displays all the functions that are assigned to the logic input in order to check for multiple assignments. If no functions have been assigned, **[No]** (nO) is displayed. Use the jog dial to scroll through the functions. The use of graphic display terminal allows to see the delay **[LI1 On Delay]** (LId). Possible values are the same than in configuration menu page 124.	
L2A to L6A LA1A LA2A	**[L-- assignment]** All the logic inputs available on the drive are processed as in the example for LI1 above.	
LIS1	**[State of logic inputs LI1 to LI6]** Can be used to visualize the state of logic inputs LI1 to LI6 (display segment assignment: high = 1, low = 0). 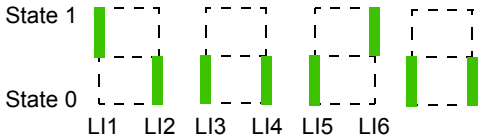 Example above: LI1 and LI6 are at 1; LI2 to LI5 are at 0.	
LIS2	**[State of Safe Torque Off]** Can be used to visualize the state of LA1, LA2 and STO (Safe Torque Off) (display segment assignment: high = 1, low = 0). 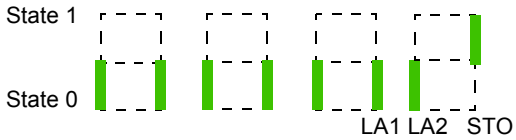 Example above: LA1 and LA2 are at 0; STO (Safe Torque Off) is at 1.	

Parameters described in this page can be accessed by: DRI- > MON- > IOM- > AIA-

Code	Name / Description	Unit
AIA-	**[ANALOG INPUTS IMAGE]** Analog input functions.	
AI1C	**[AI1]** AI1 customer image: Value of analog input 1.	V
AI1A	**[AI1 assignment]** AI1 functions assignment. If no functions have been assigned, **[No]** (nO) is displayed. Following parameters are visible on the graphic display terminal by pressing the ENT key on the parameter. nO **[No]** (nO): Not assigned Fr1 **[Ref.1 channel]** (Fr1): Reference source 1 Fr2 **[Ref.2 channel]** (Fr2): Reference source 2 SA2 **[Summing ref. 2]** (SA2): Summing reference 2 PIF **[PID feedback]** (PIF): PI feedback (PI control) tAA **[Torque limitation]** (tAA): Torque limitation: Activation by an analog value dA2 **[Subtract. ref. 2]** (dA2): Subtracting reference 2 PIM **[Manual PID ref.]** (PIM): Manual speed reference of the PI(D) regulator (auto-man) FPI **[PID speed ref.]** (FPI): Speed reference of the PI(D) regulator (predictive reference) SA3 **[Summing ref. 3]** (SA3): Summing reference 3 Fr1b **[Ref.1B channel]** (Fr1b): Reference source 1B dA3 **[Subtract. ref. 3]** (dA3): Subtracting reference 3 FLOC **[Forced local]** (FLOC): Forced local reference source MA2 **[Ref. 2 multiplier]** (MA2): Multiplying reference 2 MA3 **[Ref. 3 multiplier]** (MA3): Multiplying reference 3 PES **[Weight input]** (PES): External weight measurement function IA01 **[IA01]** (IA01): Functions blocks: Analog Input 01 ... **...** IA10 **[IA10]** (IA10): Functions blocks: Analog Input 10	
UIL1	**[AI1 min value]** Voltage scaling parameter of 0%.	V
UIH1	**[AI1 max value]** Voltage scaling parameter of 100%.	V
AI1F	**[AI1 filter]** Interference filtering cut-off time of the low-filter.	s
AIA-	**[ANALOG INPUTS IMAGE] (continued)** Analog input functions.	
AI2C	**[AI2]** AI2 customer image: Value of analog input 2.	V
AI2A	**[AI2 assignment]** AI2 functions assignment. If no functions have been assigned, **[No]** (nO) is displayed. Following parameters are visible on the graphic display terminal by pressing the ENT key on the parameter. Identical to **[AI1 assignment]** (AI1A) page 50.	
UIL2	**[AI2 min value]** Voltage scaling parameter of 0%.	V
UIH2	**[AI2 max value]** Voltage scaling parameter of 100%.	V
AI2F	**[AI2 filter]** Interference filtering cutoff time of the low-filter.	s

Parameters described in this page can be accessed by: DRI- > MON- > IOM- > AIA- > AI3C

Code	Name / Description	Unit
AIA-	**[ANALOG INPUTS IMAGE] (continued)** Analog input functions.	
AI3C	**[AI3]** AI3 customer image: Value of analog input 3.	V
AI3A	**[AI3 assignment]** AI3 functions assignment. If no functions have been assigned, **[No]** (nO) is displayed. Following parameters are visible on the graphic display terminal by pressing the ENT key on the parameter. Identical to **[AI1 assignment]** (AI1A) page 50.	
CrL3	**[AI3 min value]** Current scaling parameter of 0%.	mA
CrH3	**[AI3 max value]** Current scaling parameter of 100%.	mA
AI3F	**[AI3 filter]** Interference filtering cutoff time of the low-filter.	s
IOM-	**[I/O MAP] (continued)**	
AOA-	**[ANALOG OUTPUTS IMAGE]** Analog output functions. Following parameters are visible on the graphic display terminal by pressing the ENT key on the parameter.	
AO1C ()	**[AO1C]** AO1 customer image: Value of analog output 1.	
AO1	**[AO1 assignment]** AO1 functions assignment. If no functions have been assigned, **[No]** (nO) is displayed. Identical to **[AO1 assignment]** (AO1) page 141.	
UOL1 ★	**[AO1 min Output]** Voltage scaling parameter of 0%. Can be accessed if **[AO1 Type]** (AO1t) is set to **[Voltage]** (IOU).	V
UOH1 ★	**[AO1 max Output]** Voltage scaling parameter of 100%. Can be accessed if **[AO1 Type]** (AO1t) is set to **[Voltage]** (IOU).	V
AOL1 ★	**[AO1 min output]** Current scaling parameter of 0%. Can be accessed if **[AO1 Type]** (AO1t) is set to **[Current]** (OA).	mA
AOH1 ★	**[AO1 max output]** Current scaling parameter of 100%. Can be accessed if **[AO1 Type]** (AO1t) is set to **[Current]** (OA).	mA
ASL1	**[Scaling AO1 max]** Minimum scaling value for AO1.	%
ASH1	**[Scaling AO1 min]** Maximum scaling value for AO1.	%
AO1F	**[AO1 filter]** Cutoff time of the low-filter.	s

Parameters described in this page can be accessed by: DRI- > MON- > IOM- > FSI-

Code	Name / Description	Unit
IOM-	**[I/O MAP] (continued)**	
FSI-	**[FREQ. SIGNAL IMAGE]** Frequency signal image. This menu is visible only on graphic display terminal.	
PFrC	**[RP input]** Filtered customer pulse input frequency reference. Following parameters are visible on the graphic display terminal by pressing the ENT key on the parameter.	Hz
PIA	**[RP assignment]** Pulse input assignment. If no functions have been assigned, **[No]** (nO) is displayed. Identical to **[AI1 assignment]** (AI1A) page 50.	
PIL	**[RP min value]** RP minimum value. Pulse input scaling parameter of 0%.	kHz
PFr	**[RP max value]** RP maximum value Pulse input scaling parameter of 100%.	kHz
PFI	**[RP filter]** Interference filtering pulse input cutoff time of the low-filter.	ms
MOn-	**[1.2 MONITORING] (continued)**	
SAF-	**[MONIT. SAFETY]** For more details on Integrated Safety Functions, please refer to dedicated Safety manual.	
StOS	**[STO status]** Status of the Safe Torque Off safety function. IdLE **[Idle]** (IdLE): STO not in progress StO **[Safe stop]** (StO): STO in progress FLt **[Fault]** (FLt): STO fault detected	
SLSS	**[SLS status]** Status of the Safely-limited speed safety function. nO **[Not config.]** (nO): SLS not configured IdLE **[Idle]** (IdLE): SLS not in progress ?AIt **[SLS wait time]** (?AIt): SLS waiting for activation Strt **[SLS start]** (Strt): SLS in transient state SSI **[Safe ramp]** (SSI): SLS ramp in progress SLS **[Spd limited]** (SLS): SLS speed limitation in progress StO **[Safe stop]** (StO): SLS safe torque off request in progress FLt **[Fault]** (FLt): SLS fault detected	
SSIS	**[SS1 status]** Status of the Safe Stop 1 safety function. nO **[Not config.]** (nO): SS1 not configured IdLE **[Idle]** (IdLE): SS1 not in progress SSI **[Safe ramp]** (SSI): SS1 ramp in progress StO **[Safe stop]** (StO): SS1 safe torque off request in progress FLt **[Fault]** (FLt): SS1 fault detected	

Parameters described in this page can be accessed by: DRI- > MON- > SAF-

Code	Name / Description	Unit
SFFE	**[Safety fault reg.]** Safety function fault error register. Bit0 = 1: Logic inputs debounce time-out (verify value of debounce time LIDT according to the application) Bit1 Reserved Bit2 = 1: Motor speed sign has changed during SS1 ramp Bit3 = 1: Motor speed has reached the frequency limit threshold during SS1 ramp. Bit4: Reserved Bit5: Reserved Bit6 = 1: Motor speed sign has changed during SLS limitation Bit7 = 1: Motor speed has reached the frequency limit threshold during SS1 ramp. Bit8: Reserved Bit9: Reserved Bit10: Reserved Bit11: Reserved Bit12: Reserved Bit13 = 1: Not possible to measure the motor speed (verify the motor wiring connection) Bit14 = 1: Motor ground short-circuit detected (verify the motor wiring connection) Bit15 = 1: Motor phase to phase short-circuit detected (verify the motor wiring connection)	
MOn-	**[1.2 MONITORING] (continued)**	
MFb-	**[MONIT. FUN. BLOCKS]** For more details on Function Blocks, please refer to dedicated Function Blocks manual.	
FbSt	**[FB status]** Function Block Status. IdLE **[Idle]** (IdLE): Idle state CHEC **[Check prog.]** (CHEC): Check program state StOP **[Stop]** (StOP): STOP state InIt **[Init]** (InIt): Initialization state rUn **[Run]** (rUn): RUN state Err **[Error]** (Err): Error state	
FbFt	**[FB fault]** Status of the function blocks execution. nO **[No]** (nO): No fault detected Int **[Internal]** (Int): Internal fault detected bIn **[Binary file]** (bIn): Binary fault detected InP **[Intern para.]** (InP): Internal parameter fault detected PAr **[Para. RW]** (PAr): Parameter access fault detected CAL **[Calculation]** (CAL): Calculation fault detected tOAU **[TO AUX]** (tOAU): TimeOut AUX task tOPP **[TO synch]** (tOPP): TimeOut in PRE/POST task AdL **[Bad ADLC]** (AdL): ADLC with bad parameter In **[Input assign.]** (In): Input not configured	
Fb I-	**[FB IDENTIFICATION]**	
bUEr ★	**[Program version]** Program user version. Can be accessed if **[FB status]** (FbSt) is not set to **[Idle]** (IdLE).	
bnS ★	**[Program size]** Program file size. Can be accessed if **[FB status]** (FbSt) is not set to **[Idle]** (IdLE).	
bnU	**[Prg. format version]** Binary format version of the drive. Can be accessed if **[FB status]** (FbSt) is not set to **[Idle]** (IdLE).	
CtU	**[Catalogue version]** Catalog version of the drive.	

Parameters described in this page can be accessed by: DRI- > MON- > CMM-

Code	Name / Description	Unit
MOn-	**[1.2 MONITORING] (continued)**	
CMM-	**[COMMUNICATION MAP]** This menu is visible only on graphic display terminal, except for **[COM. SCANNER INPUT MAP]**.(ISA-) and **[COM SCAN MAP]**.(OSA-) menus.	
CMdC tErM HMI Mdb CAn tUd nEt PS	**[Command channel]** Active command channel. **[Terminals]** (tErM): Terminals **[HMI]** (HMI): Graphic display terminal or remote display terminal **[Modbus]** (Mdb): Integrated Modbus **[CANopen]** (CAn): Integrated CANopen® **[+/- speed]** (tUd): +/- speed command **[Com. card]** (nEt): Communication card (if inserted) **[PC tool]** (PS): PC software	
CMd	**[Cmd value]** DRIVECOM command register value. **[Profile]** (CHCF) is not set to **[I/O profile]** (IO), see page 151. Possible values in CiA402 profile, separate or not separate mode. Bit 0: "Switch on"/Contactor command Bit 1: "Disable voltage"/Authorization to supply AC power Bit 2: "Quick stop"/Emergency stop Bit 3: "Enable operation"/Run command Bit 4 to Bit 6: Reserved (set to 0) Bit 7: "Fault reset"/Fault acknowledgment active on 0 to 1 rising edge Bit 8: Halt Stop according to the **[Type of stop]** (Stt) parameter without leaving the Operation enabled state Bit 9: Reserved (set to 0) Bit 10: Reserved (set to 0) Bit 11 to Bit 15: Can be assigned to a command Possible values in the I/O profile. On state command **[2 wire]** (2C). Bit 0: Forward (on state) command = 0: No forward command = 1: Forward command The assignment of bit 0 cannot be modified. It corresponds to the assignment of the terminals. It can be switched. Bit 0 (CdO0) is only active if the channel of this control word is active. Bit 1 to Bit 15: Can be assigned to commands. On edge command **[3 wire]** (3C). Bit 0: Stop (run authorization). = 0: Stop = 1: Run is authorized on a forward or reverse command Bit 1: Forward (on 0 to 1 rising edge) command The assignment of bits 0 and 1 cannot be modified. It corresponds to the assignment of the terminals. It can be switched. Bits 0 (CdO0) and 1 (CdO1) are only active if the channel of this control word is active. Bit 2 to Bit 15: Can be assigned to commands	
rFCC tErM LOC HMI Mdb CAn tUd nEt PS	**[Active ref. channel]** HMI reference channel. **[Terminals]** (tErM): Terminals **[Local]** (LOC): Jog dial **[HMI]** (HMI): Graphic display terminal or remote display terminal **[Modbus]** (Mdb): Integrated Modbus **[CANopen]** (CAn): Integrated CANopen® **[tUd]** (tUd): +/- speed command **[Com. card]** (nEt): Communication card (if inserted) **[PC tool]** (PS): PC software	
FrH	**[Frequency ref.]** Frequency reference before ramp.	Hz

Parameters described in this page can be accessed by: DRI- > MON- > CMM-

Code	Name / Description	Unit
ETA	**[ETA state word]** DRIVECOM status word. Possible values in CiA402 profile, separate or not separate mode. Bit 0: "Ready to switch on", awaiting power section line supply Bit 1: "Switched on", ready Bit 2: "Operation enabled", running Bit 3: "Fault" = 0: No fault = 1: Fault Bit 4: "Voltage enabled", power section line supply present = 0: Power section line supply absent = 1: Power section line supply present When the drive is powered by the power section only, this bit is always at 1. Bit 5: Quick stop/Emergency stop Bit 6: "Switched on disabled", power section line supply locked Bit 7: Alarm = 0: No alarm = 1: Alarm Bit 8: Reserved (= 0) Bit 9: Remote: command or reference via the network = 0: Command or reference via the graphic display terminal or the remote display terminal = 1: Command or reference via the network Bit 10: Target reference reached = 0: The reference is not reached = 1: The reference has been reached When the drive is in speed mode, this is the speed reference. Bit 11: "Internal limit active", reference outside limits = 0: The reference is within the limits = 1: The reference is not within the limits When the drive is in speed mode, the limits are defined by the **[Low speed]** (LSP) and **[High speed]** (HSP) parameters. Bit 12 and Bit 13: Reserved (= 0) Bit 14: "Stop key", STOP via stop key = 0: STOP key not pressed = 1: Stop triggered by the STOP key on the graphic display terminal or the remote display terminal Bit 15: "Direction", direction of rotation = 0: Forward rotation at output = 1: Reverse rotation at output The combination of bits 0, 1, 2, 4, 5 and 6 defines the state in the DSP 402 state chart (see the Communication manuals). Possible values in the I/O profile. **Note:** The value is identical in the CiA402 profile and the I/O profile. In the I/O profile, the description of the values is simplified and does not refer to the CiA402 (Drivecom) state chart. Bit 0: Reserved (= 0 or 1) Bit 1: Ready = 0: Not ready = 1: Ready Bit 2: Running = 0: The drive will not start if a reference other than zero is applied. = 1: Running, if a reference other than zero is applied, the drive can start. Bit 3: Fault = 0: No fault = 1: Fault Bit 4: Power section line supply present = 0: Power section line supply absent = 1: Power section line supply present Bit 5: Reserved (= 1) Bit 6: Reserved (= 0 or 1) Bit 7: Alarm = 0: No alarm = 1: Alarm Bit 8: Reserved (= 0) Bit 9: Command via a network = 0: Command via the terminals or the graphic display terminal = 1: Command via a network	

Parameters described in this page can be accessed by: DRI- > MON- > CMM-

Code	Name / Description	Unit
	Bit 10: Reference reached = 0: The reference is not reached = 1: The reference has been reached Bit 11: Reference outside limits = 0: The reference is within the limits = 1: The reference is not within the limits When the drive is in speed mode, the limits are defined by LSP and HSP parameters. Bit 12 and Bit 13: Reserved (= 0) Bit 14: Stop via STOP key = 0: STOP key not pressed = 1: Stop triggered by the STOP key on the graphic display terminal or the remote display terminal Bit 15: Direction of rotation = 0: Forward rotation at output = 1: Reverse rotation at output	
Mnd-	**[MODBUS NETWORK DIAG]** Modbus network diagnostic.	
Mdb1	**[COM LED]** View of the Modbus Communication.	
MICt	**[Mb NET frames nb.]** Modbus network frame counter: Number of processed frames.	
MIEC	**[Mb NET CRC errors]** Modbus network CRC error counter: Number of CRC errors.	
CMM-	**[COMMUNICATION MAP] (continued)**	
dbt-	**[DIAG BLUETOOTH]** Bluetooth network diagnostic.	
Mdb2	**[COM LED]** View of the Bluetooth Communication Led on integrated display. Led Off: The Bluetooth channel is deactivated. Led fixed On: The bluetooth channel is activated with active connection. Led blinking: The bluetooth channel is activated without active connection.	
M3Ct	**[Frame Nb]** Bluetooth frame counter: Number of processed frames.	
M3EC	**[CRC error Nb]** Bluetooth CRC error counter: Number of CRC errors.	
CMM-	**[COMMUNICATION MAP] (continued)**	
ISA-	**[COM. SCANNER INPUT MAP]** Used for CANopen® and Modbus Network.	
nM1	**[Com Scan In1 val.]** Value of the 1st input word.	
nM2	**[Com Scan In2 val.]** Value of the 2nd input word.	
nM3	**[Com Scan In3 val.]** Value of the 3rd input word.	
nM4	**[Com Scan In4 val.]** Value of the 4th input word.	
nM5	**[Com Scan In5 val.]** Value of the 5th input word.	
nM6	**[Com Scan In6 val.]** Value of the 6th input word.	
nM7	**[Com Scan In7 val.]** Value of the 7th input word.	
nM8	**[Com Scan In8 val.]** Value of the 8th input word.	

Parameters described in this page can be accessed by: DRI- > MON- > CMM- > OSA-

Code	Name / Description	Unit
CMM-	**[COMMUNICATION MAP] (continued)**	
OSA-	**[COM SCAN MAP]**	
nC1	**[Com Scan Out1 val.]** Value of the 1st output word.	
nC2	**[Com Scan Out2 val.]** Value of the 2nd output word.	
nC3	**[Com Scan Out3 val.]** Value of the 3rd output word.	
nC4	**[Com Scan Out4 val.]** Value of the 4th output word.	
nC5	**[Com Scan Out5 val.]** Value of the 5th output word.	
nC6	**[Com Scan Out6 val.]** Value of the 6th output word.	
nC7	**[Com Scan Out7 val.]** Value of the 7th output word.	
nC8	**[Com Scan Out8 val.]** Value of the 8th output word.	
CMM-	**[COMMUNICATION MAP] (continued)**	
C1-	**[CMD. WORD IMAGE]** Command word image: Only accessible via graphic display terminal.	
CMd1	**[Modbus cmd.]** Modbus command word image.	
CMd2	**[CANopen cmd.]** CANopen® command word image.	
CMd3	**[COM. card cmd.]** Communication card command word image.	
CMM-	**[COMMUNICATION MAP] (continued)**	
r1-	**[FREQ. REF. WORD MAP]** Frequency reference image: Only accessible via graphic display terminal.	
LFr1	**[Modbus ref.]** Modbus frequency reference image.	Hz
LFr2	**[CANopen ref.]** CANopen® frequency reference image.	Hz
LFr3	**[Com. card ref.]** Communication card frequency reference image.	Hz
CMM-	**[COMMUNICATION MAP] (continued)**	
CnM-	**[CANopen MAP]** CANopen® image: Only accessible via graphic display terminal.	
COn	**[RUN LED]** View of the CANopen® RUN Led Status.	
CAnE	**[ERR LED]** View of the CANopen® Error Led Status.	
PD1-	**[PDO1 IMAGE]** View of the RPDO1 and TPDO1.	
rP11 ★	**[Received PDO1-1]** First frame of the received PDO1.	

Parameters described in this page can be accessed by: DRI- > MON- > CMM- > CNM- > P01-

Code	Name / Description	Unit
rP12 ★	**[Received PDO1-2]** Second frame of the received PDO1.	
rP13 ★	**[Received PDO1-3]** Third frame of the received PDO1.	
rP14 ★	**[Received PDO1-4]** Fourth frame of the received PDO1.	
tP11 ★	**[Transmit PDO1-1]** First frame of the transmit PDO1.	
tP12 ★	**[Transmit PDO1-2]** Second frame of the transmit PDO1.	
tP13 ★	**[Transmit PDO1-3]** Third frame of the transmit PDO1.	
tP14 ★	**[Transmit PDO1-4]** Fourth frame of the transmit PDO1.	
CnM-	**[CANopen MAP] (continued)** CANopen® image: Only accessible via graphic display terminal.	
P02-	**[PDO2 IMAGE]** View of the RPDO2 and TPDO2: Same structure as **[PDO1 IMAGE]** (P01-).	
rP21 ★	**[Received PDO2-1]** First frame of the received PDO2.	
rP22 ★	**[Received PDO2-2]** Second frame of the received PDO2.	
rP23 ★	**[Received PDO2-3]** Third frame of the received PDO2.	
rP24 ★	**[Received PDO2-4]** Fourth frame of the received PDO2.	
tP21 ★	**[Transmit PDO2-1]** First frame of the transmit PDO2.	
tP22 ★	**[Transmit PDO2-2]** Second frame of the transmit PDO2.	
tP23 ★	**[Transmit PDO2-3]** Third frame of the transmit PDO2.	
tP24 ★	**[Transmit PDO2-4]** Fourth frame of the transmit PDO2.	

Parameters described in this page can be accessed by: DRI- > MON- > CMM- > CNM- > P03-

Code	Name / Description	Unit
CnM-	**[CANopen MAP] (continued)** CANopen® image: Only accessible via graphic display terminal.	
P03-	**[PDO3 IMAGE]** View of the RPDO3 and TPDO3: Same structure as **[PDO1 IMAGE]** (P01-).	
rP31 ★	**[Received PDO3-1]** First frame of the received PDO3.	
rP32 ★	**[Received PDO3-2]** Second frame of the received PDO3.	
rP33 ★	**[Received PDO3-3]** Third frame of the received PDO3.	
rP34 ★	**[Received PDO3-4]** Fourth frame of the received PDO3.	
tP31 ★	**[Transmit PDO3-1]** First frame of the transmit PDO3.	
tP32 ★	**[Transmit PDO3-2]** Second frame of the transmit PDO3.	
tP33 ★	**[Transmit PDO3-3]** Third frame of the transmit PDO3.	
tP34 ★	**[Transmit PDO3-4]** Fourth frame of the transmit PDO3.	
CnM-	**[CANopen MAP] (continued)** CANopen® image: Only accessible via graphic display terminal.	
nMtS	**[Canopen NMT state]** Drive NMT State of the CANopen® slave. bOOt **[Boot]** (bOOt): Bootup StOP **[Stopped]** (StOP): Stopped OPE **[Operation]** (OPE): Operational POPE **[Pre-op]** (POPE): Pre-Operational	
nbtP	**[Number of TX PDO]** Number of transmit PDO.	
nbrP	**[Number of RX PDO]** Number of receive PDO.	
ErC0	**[Error code]** CANopen® error register (from 1 to 5).	
rEC1	**[RX Error Counter]** Controller Rx error counter (not memorized at power off).	
tEC1	**[TX error counter]** Controller Tx error counter (not memorized at power off).	

Parameters described in this page can be accessed by: DRI- > MON- > MPI-

Code	Name / Description	Unit
MOn -	**[1.2 MONITORING] (continued)**	
MPI - ★	**[MONIT. PI]** PID management. Visible if **[PID feedback ass.]** (PIF) is not set to **[No]** (nO).	
rPI ( ) ★	**[Internal PID ref.]** Internal PID reference: As a process value.	
rPE ★	**[PID error]** PID error value.	
rPF ★	**[PID feedback]** PID feedback value.	
rPC ★	**[PID reference]** PID setpoint value via graphic display terminal.	
rPO	**[PID Output]** PID output value with limitation.	Hz
MOn -	**[1.2 MONITORING] (continued)**	
PEt -	**[MONIT. POWER TIME]**	
APH	**[Consumption]** Energy consumption in Wh, kWh or MWh (accumulated consumption).	Wh, kWh, MWh
rtH	**[Run time]** Run elapsed time display (resetable) in seconds, minutes or hours (length of time the motor has been switched on).	s, min, h
PtH	**[Power on time]** Power elapsed time display in seconds, minutes or hours (length of time the drive has been switched on).	s, min, h
rPr ( )	**[Operating t. reset]** Reset of run elapsed time. nO **[No]** (nO): Reset operation not in progress APH **[Reset kWh]** (APH): Clear **[Reset kWh]** (APH) rtH **[rst. runtime]** (rtH): Clear **[rst. runtime]** (rtH) PtH **[rst. P On t.]** (PtH): Clear **[rst. P On t.]** (PtH)	
MOn -	**[1.2 MONITORING] (continued)**	
CnFS	**[Config. active]** View of the active configuration. nO **[In progress]** (nO): Transitory state (configuration changing) CnF0 **[Config. n°0]** (CnF0): Configuration 0 active CnF1 **[Config. n°1]** (CnF1): Configuration 1 active CnF2 **[Config. n°2]** (CnF2): Configuration 2 active	
CFPS ★	**[Utilised param. set]** Configuration parameter status (can be accessed if parameter switching has been enabled, see page 226). nO **[None]** (nO): Not assigned CFP1 **[Set N°1]** (CFP1): Parameter set 1 active CFP2 **[Set N°2]** (CFP2): Parameter set 2 active CFP3 **[Set N°3]** (CFP3): Parameter set 3 active	

Parameters described in this page can be accessed by: DRI- > MON-

Code	Name / Description	Unit
ALGr	**[Alarm groups]** Current impacted alarm group numbers. Group of alarms could be user defined in **[INPUTS / OUTPUTS CFG]** (I_O-) page 122.	
---	**[---]** (---): No alarm group impacted	
1--	**[1--]** (1--): Alarm group 1	
-2-	**[-2-]** (-2-): Alarm group 2	
12-	**[12-]** (12-): Alarm group 1 and 2	
--3	**[--3]** (--3): Alarm group 3	
1-3	**[1-3]** (1-3): Alarm group 1 and 3	
-23	**[-23]** (-23): Alarm group 2 and 3	
123	**[123]** (123): Alarm group 1, 2 and 3	
SPd1 or SPd2 or ?SPd3	**[Cust. output value]** [Cust. output value] (SPd1), [Cust. output value] (SPd2) or [Cust. output value] (SPd3) depending on the [Scale factor display] (Sd5) parameter, page 101 ([Cust. output value] (SPd3) in the factory setting)	
ALr-	**[ALARMS]** List of current alarms. If an alarm is present, a ✓ appears on the graphic display terminal.	
nOAL	**[No alarm]** (nOAL)	
PtCL	**[PTC alarm]** (PtCL)	
EtF	**[External fault]** (EtF)	
USA	**[UnderV. al.]** (USA)	
CtA	**[I attained]** (CtA)	
FtA	**[Freq. Th. attain.]** (FtA)	
F2A	**[Freq. Th. 2 attained]** (F2A)	
SrA	**[Freq.ref.att]** (SrA)	
tSA	**[Th.mot. att.]** (tSA)	
tS2	**[Th.mot2 att.]** (tS2)	
tS3	**[Th.mot3 att.]** (tS3)	
UPA	**[Underv. prev.]** (UPA)	
FLA	**[HSP attain.]** (FLA)	
tHA	**[Al. °C drv]** (tHA)	
AG1	**[Alarm group 1]** (AG1)	
AG2	**[Alarm group 2]** (AG2)	
AG3	**[Alarm group 3]** (AG3)	
PEE	**[PID error al]** (PEE)	
PFA	**[PID fdbk al.]** (PFA)	
AP3	**[AI3 Al. 4-20mA]** (AP3)	
SSA	**[Lim T/I att.]** (SSA)	
tAd	**[Th.drv.att.]** (tAd)	
tJA	**[IGBT alarm]** (tJA)	
bOA	**[Brake R. al.]** (bOA)	
ULA	**[Underload. Proc. Al.]** (ULA)	
OLA	**[Overload. Proc. Al.]** (OLA)	
rSdA	**[Rope slack alarm]** (rSdA)	
ttHA	**[High torque alarm]** (ttHA)	
ttLA	**[Low torque alarm]** (ttLA)	
dLdA	**[Dynamic load alarm]** (dLdA)	
FqLA	**[Freq. meter Alarm]** (FqLA)	

Parameters described in this page can be accessed by: DRI- > MON- > SST-

Code	Name / Description	Unit
SSt -	**[OTHER STATE]** List of secondary states. This menu is visible only on graphic display terminal.	
FL	**[In motor fluxing]** (FL)	
PtCL	**[PTC Alarm]** (PtCL)	
FSt	**[Fast stop in prog.]** (FSt)	
CtA	**[Current Th. attained]** (CtA)	
FtA	**[Freq. Th. attained]** (FtA)	
F2A	**[Freq. Th. 2 attained]** (F2A)	
SrA	**[Frequency ref. att.]** (SrA)	
tSA	**[Motor th. state att.]** (tSA)	
EtF	**[External fault alarm]** (EtF)	
AUtO	**[Auto restart]** (AUtO)	
FtL	**[Remote]** (FtL)	
tUn	**[Auto-tuning]** (tUn)	
USA	**[Undervoltage]** (USA)	
CnF 1	**[Config. 1 act.]** (CnF 1)	
CnF2	**[Config. 2 act.]** (CnF2)	
FLA	**[HSP attained]** (FLA)	
CFP 1	**[Set 1 active]** (CFP 1)	
CFP2	**[Set 2 active]** (CFP2)	
CFP3	**[Set 3 active]** (CFP3)	
brS	**[In braking]** (brS)	
dbL	**[DC bus loading]** (dbL)	
ttHA	**[High torque alarm]** (ttHA)	
ttLA	**[Low torque alarm]** (ttLA)	
MFrd	**[Forward]** (MFrd)	
Mrrs	**[Reverse]** (Mrrs)	
F9LA	**[Freq. metre Alarm]** (F9LA)	
dGt -	**[DIAGNOSTICS]** This menu is visible only on graphic display terminal.	
PFH -	**[FAULT HISTORY]** Shows the 8 last detected faults.	
dP 1	**[Past fault 1]** Fault record 1 (1 is last).	
nOF	**[No fault]** (nOF): No detected fault memorized	
ASF	**[Angle error]** (ASF): Angle setting detected fault	
bLF	**[Brake control]** (bLF): Brake's motor 3-phases loss	
brF	**[Brake feedback]** (brF): Brake contactor detected error	
CFF	**[Incorrect config.]** (CFF): Invalid configuration at power on	
CF 12	**[Bad conf]** (CF 12): Configuration transfer detected error	
CnF	**[Com. network]** (CnF): NET option communication interruption	
COF	**[CAN com.]** (COF): CANopen® communication interruption	
CrF	**[Capa.charg]** (CrF): Load relay detected fault	
CSF	**[Ch.sw. fault]** (CSF): Channel switching detected error	
dLF	**[Load fault]** (dLF): Dynamic load detected error	
EEF 1	**[Control EEprom]** (EEF 1): Control EEprom detected error	
EEF2	**[Power Eeprom]** (EEF2): Power EEprom detected error	
EPF 1	**[External fault LI/Bit]** (EPF 1): External detected fault from LI or local link	
EPF2	**[External fault com.]** (EPF2): External interruption from communication board	
FbE	**[FB fault]** (FbE): Function block detected error	
FbES	**[FB stop fly.]** (FbES): Function block stop detected error	
FCF 1	**[Out. contact. stuck]** (FCF 1): Output contactor: closed contactor	
FCF2	**[Out. contact. open.]** (FCF2): Output contactor: opened contactor	
HCF	**[Cards pairing]** (HCF): Hardware configuration detected error	
HdF	**[IGBT desaturation]** (HdF): Hardware detected error	
ILF	**[Option int link]** (ILF): Option internal link interruption	
InF 1	**[Rating error]** (InF 1): Unknown drive rating	
InF2	**[PWR Calib.]** (InF2): Unknown or incompatible power board	
InF3	**[Int.serial link]** (InF3): Internal serial link communication interruption	
InF4	**[Int.Mfg area]** (InF4): Invalid industrialization zone	
InF6	**[Internal-option]** (InF6): Unknown or incompatible option board	
InF9	**[Internal- I measure]** (InF9): Current measurement circuit detected error	

Parameters described in this page can be accessed by: DRI- > MON- > DGT- > PFH-

Code	Name / Description	Unit
InFA	**[Internal-mains circuit]** (InFA): Input phase loss circuit detected error	
InFb	**[Internal- th. sensor]** (InFb): Thermal sensor detected error (OC or SC)	
InFE	**[Internal-CPU]** (InFE): CPU detected fault (ram, flash, task ...)	
LCF	**[Input contactor]** (LCF): Line contactor detected error	
LFF3	**[AI3 4-20mA loss]** (LFF3): AI3 4-20 mA loss	
ObF	**[Overbraking]** (ObF): Overbraking	
OCF	**[Overcurrent]** (OCF): Overcurrent	
OHF	**[Drive overheat]** (OHF): Drive overheating	
OLC	**[Proc.Overload Flt]** (OLC): Torque overload	
OLF	**[Motor overload]** (OLF): Motor overload	
OPF1	**[1 output phase loss]** (OPF1): Motor 1-phase loss	
OPF2	**[3out ph loss]** (OPF2): Motor 3-phases loss	
OSF	**[Mains overvoltage]** (OSF): Oversupply detected fault	
OtFL	**[PTC fault]** (OtFL): Motor overheating detected error from PTCL: standard product	
PHF	**[Input phase loss]** (PHF): Main input 1-phase loss	
PtFL	**[LI6=PTC probe]** (PtFL): PTCL detected error (OC or SC)	
SAFF	**[Safety]** (SAFF): Safety function trip	
SCF1	**[Motor short circuit]** (SCF1): Motor short circuit (hard detection)	
SCF3	**[Ground short circuit]** (SCF3): Direct ground short-circuit trip (hard detection)	
SCF4	**[IGBT short circuit]** (SCF4): IGBT short-circuit (hard detection)	
SCF5	**[Motor short circuit]** (SCF5): Load short-circuit during Igon load sequence (hard detection)	
SLF1	**[Modbus com.]** (SLF1): Modbus local serial communication interruption	
SLF2	**[PC com.]** (SLF2): PC Software communication interruption	
SLF3	**[HMI com.]** (SLF3): Remote terminal communication interruption	
SOF	**[Overspeed]** (SOF): Overspeed	
SPF	**[Speed fdback loss]** (SPF): Speed feedback loss	
SSF	**[Torque/current lim]** (SSF): Torque current limitation detected fault	
tJF	**[IGBT overheat]** (tJF): IGBT overheating	
tnF	**[Auto-tuning]** (tnF): Tune detected fault	
ULF	**[Pr.Underload Flt]** (ULF): Torque underload	
USF	**[Undervoltage]** (USF): Undervoltage	
HS1	**[Drive state]** HMI Status of the detected fault record 1.	
tUn	**[Auto-tuning]** (tUn): Auto-tuning	
dCb	**[In DC inject.]** (dCb): Injection braking	
rdY	**[Ready]** (rdY): Drive ready	
nSt	**[Freewheel]** (nSt): Freewheel stop control	
rUn	**[Drv running]** (rUn): Motor in steady state or run command present and zero reference	
ACC	**[In accel.]** (ACC): Acceleration	
dEC	**[In decel.]** (dEC): Deceleration	
CL1	**[Current lim.]** (CL1): Current limit (in case of using a synchronous motor, if the motor does not start, follow the procedure page 109)	
FSt	**[Fast stop]** (FSt): Fast stop	
FLU	**[Mot. fluxing]** (FLU): Fluxing function is activated	
nLP	**[no mains V.]** (nLP): Control is powered on but the DC bus is not loaded	
CtL	**[control.stop]** (CtL): Controlled stop	
Obr	**[Dec. adapt.]** (Obr): Adapted deceleration	
SOC	**[Output cut]** (SOC): Stand by output cut	
USA	**[UnderV. al.]** (USA): Undervoltage alarm	
tC	**[In mfg. test]** (tC): TC indus mode activated	
St	**[in autotest]** (St): Self test in progress	
FA	**[autotest err]** (FA): Self test detected error	
YES	**[Autotest OK]** (YES): Self test OK	
EP	**[eeprom test]** (EP): Self test Eeprom detected error	
FLt	**[In fault]** (FLt): Product has detected a fault	
SS1	**[SS1 active]** (SS1): Safety SS1 level	
SLS	**[SLS active]** (SLS): Safety SLS level	
StO	**[STO active]** (StO): Safety STO level	
EP1	**[ETA state word]** DRIVECOM status register of detected fault record 1 (same as **[ETA state word]** (EtA) page 55).	
IP1	**[ETI state word]** Extended status register of detected fault record 1 (see the communication parameters file).	
CMP1	**[Cmd word]** Command register of detected fault record 1 (same as **[Cmd word]** (CMd) page 54).	

Parameters described in this page can be accessed by: DRI- > MON- > DGT- > PFH-

Code	Name / Description	Unit
LCP1	**[Motor current]** Estimated motor current of detected fault record 1 (same as **[Motor current]** (LCr) page 48).	A
rFP1	**[Output frequency]** Estimated motor frequency of detected fault record 1 (same as **[Output frequency]** (rFr) page 48).	Hz
rtP1	**[Elapsed time]** Elapsed run time of detected fault record 1 (same as **[Elapsed time]** (rtH) page 60).	h
ULP1	**[Mains voltage]** Main voltage of detected fault record 1 (same as **[Mains voltage]** (ULn) page 48).	V
tHP1	**[Motor thermal state]** Motor thermal state of detected fault record 1 (same as **[Motor thermal state]** (tHr) page 48).	%
dCC1	**[Command Channel]** Command channel of detected fault record 1 (same as **[Command channel]** (CMdC) page 54).	
drC1	**[Channel ref. active]** Reference channel of detected fault record 1 (same as **[Channel ref. active]** (rFCC) page 54).	
Sr11	**[Saf01 Reg n-1]** SAF1 Register x (1 is last)	
Sr21	**[Saf02 Reg n-1]** SAF2 Register x (1 is last)	
SrA1	**[SF00 Reg n-1]** SF00 Register x (1 is last)	
Srb1	**[SF01 Reg n-1]** SF01 Register x (1 is last)	
SrC1	**[SF02 Reg n-1]** SF02 Register x (1 is last)	
Srd1	**[SF03 Reg n-1]** SF03 Register x (1 is last)	
SrE1	**[SF04 Reg n-1]** SF04 Register x (1 is last)	
SrF1	**[SF05 Reg n-1]** SF05 Register x (1 is last)	
SrG1	**[SF06 Reg n-1]** SF06 Register x (1 is last)	
SrH1	**[SF07 Reg n-1]** SF07 Register x (1 is last)	
Sr11	**[SF08 Reg n-1]** SF08 Register x (1 is last)	
SrJ1	**[SF09 Reg n-1]** SF09 Register x (1 is last)	
Sr?1	**[SF10 Reg n-1]** SF10 Register x (1 is last)	
SrL1	**[SF11 Reg n-1]** SF11 Register x (1 is last)	

Parameters described in this page can be accessed by: DRI- > MON- > DGT- > PFH-

Code	Name / Description	Unit
PFH-	**[FAULT HISTORY] (continued)** Shows the 8 last detected faults.	
dP2	**[Past fault 2]** [Saf1 Reg n-2] (Sr12), [Saf2 Reg n-2] (Sr22), [SF00 Reg n-2] (SrA2), [SF01 Reg n-2] (Srb2), and [SF02 Reg n-2] (SrC2) to [SF11 Reg n-2] (SrL2) may be visible with this parameter. Identical to **[Past fault 1]** (dP1) page 62.	
dP3	**[Past fault 3]** [Saf1 Reg n-3] (Sr13), [Saf2 Reg n-3] (Sr23), [SF00 Reg n-3] (SrA3), [SF01 Reg n-3] (Srb3), and [SF02 Reg n-3] (SrC3) to [SF11 Reg n-3] (SrL3) may be visible with this parameter. Identical to **[Past fault 1]** (dP1) page 62.	
dP4	**[Past fault 4]** [Saf1 Reg n-4] (Sr14), [Saf2 Reg n-4] (Sr24), [SF00 Reg n-4] (SrA4), [SF01 Reg n-4] (Srb4), and [SF02 Reg n-4] (SrC4) to [SF11 Reg n-4] (SrL4) may be visible with this parameter. Identical to **[Past fault 1]** (dP1) page 62.	
dP5	**[Past fault 5]** [Saf1 Reg n-5] (Sr15), [Saf2 Reg n-5] (Sr25), [SF00 Reg n-5] (SrA5), [SF01 Reg n-5] (Srb5), and [SF02 Reg n-5] (SrC5) to [SF11 Reg n-5] (SrL5) may be visible with this parameter. Identical to **[Past fault 1]** (dP1) page 62.	
dP6	**[Past fault 6]** [Saf1 Reg n-6] (Sr16), [Saf2 Reg n-6] (Sr26), [SF00 Reg n-6] (SrA6), [SF01 Reg n-6] (Srb6), and [SF02 Reg n-6] (SrC6) to [SF11 Reg n-6] (SrL6) may be visible with this parameter. Identical to **[Past fault 1]** (dP1) page 62.	
dP7	**[Past fault 7]** [Saf1 Reg n-7] (Sr17), [Saf2 Reg n-7] (Sr27), [SF00 Reg n-7] (SrA7), [SF01 Reg n-7] (Srb7), and [SF02 Reg n-7] (SrC7) to [SF11 Reg n-7] (SrL7) may be visible with this parameter. Identical to **[Past fault 1]** (dP1) page 62.	
dP8	**[Past fault 8]** [Saf1 Reg n-8] (Sr18), [Saf2 Reg n-8] (Sr28), [SF00 Reg n-8] (SrA8), [SF01 Reg n-8] (Srb8), and [SF02 Reg n-8] (SrC8) to [SF11 Reg n-8] (SrL8) may be visible with this parameter. Identical to **[Past fault 1]** (dP1) page 62.	

Parameters described in this page can be accessed by: DRI- > MON- > PFL-

Code	Name / Description	Unit
dGt -	**[DIAGNOSTICS] (continued)**	
PFL -	**[CURRENT FAULT LIST]**	
nOF	**[No fault]** (nOF): No detected fault memorized	
ASF	**[Angle error]** (ASF): Angle setting detected fault	
bLF	**[Brake control]** (bLF): Brake's motor 3-phases loss	
brF	**[Brake feedback]** (brF): Brake contactor detected error	
CFF	**[Incorrect config.]** (CFF): Invalid configuration at power on	
CF12	**[Bad conf]** (CF12): Configuration transfer detected error	
CnF	**[Com. network]** (CnF): NET option communication interruption	
COF	**[CAN com.]** (COF): CANopen® communication interruption	
CrF	**[Capa.charg]** (CrF): Load relay detected fault	
CSF	**[Ch.sw. fault]** (CSF): Channel switching detected error	
dLF	**[Load fault]** (dLF): Dynamic load detected error	
EEF1	**[Control EEprom]** (EEF1): Control EEprom detected error	
EEF2	**[Power Eeprom]** (EEF2): Power EEprom detected error	
EPF1	**[External fault LI/Bit]** (EPF1): External detected fault from LI or local link	
EPF2	**[External fault com.]** (EPF2): External interruption from communication board	
FbE	**[FB fault]** (FbE): Function block detected error	
FbES	**[FB stop fly.]** (FbES): Function block stop detected error	
FCF1	**[Out. contact. stuck]** (FCF1): Output contactor: closed contactor	
FCF2	**[Out. contact. open.]** (FCF2): Output contactor: opened contactor	
HCF	**[Cards pairing]** (HCF): Hardware configuration detected error	
HdF	**[IGBT desaturation]** (HdF): Hardware detected error	
ILF	**[Option int link]** (ILF): Option internal link interruption	
InF1	**[Rating error]** (InF1): Unknown drive rating	
InF2	**[PWR Calib.]** (InF2): Unknown or incompatible power board	
InF3	**[Int.serial link]** (InF3): Internal serial link communication interruption	
InF4	**[Int.Mfg area]** (InF4): Invalid industrialization zone	
InF6	**[Internal-option]** (InF6): Unknown or incompatible option board	
InF9	**[Internal- I measure]** (InF9): Current measurement circuit detected error	
InFA	**[Internal-mains circuit]** (InFA): Input phase loss circuit detected error	
InFb	**[Internal- th. sensor]** (InFb): Thermal sensor detected error (OC or SC)	
InFE	**[Internal-CPU]** (InFE): CPU detected fault (ram, flash, task ...)	
LCF	**[Input contactor]** (LCF): Line contactor detected error	
LFF3	**[AI3 4-20mA loss]** (LFF3): AI3 4-20 mA loss	
ObF	**[Overbraking]** (ObF): Overbraking	
OCF	**[Overcurrent]** (OCF): Overcurrent	
OHF	**[Drive overheat]** (OHF): Drive overheating	
OLC	**[Proc.Overload Flt]** (OLC): Torque overload	
OLF	**[Motor overload]** (OLF): Motor overload	
OPF1	**[1 output phase loss]** (OPF1): Motor 1-phase loss	
OPF2	**[3out ph loss]** (OPF2): Motor 3-phases loss	
OSF	**[Mains overvoltage]** (OSF): Oversupply detected fault	
OtFL	**[PTC fault]** (OtFL): Motor overheating detected error from PTCL: standard product	
PHF	**[Input phase loss]** (PHF): Main input 1-phase loss	
PtFL	**[LI6=PTC probe]** (PtFL): PTCL detected error (OC or SC)	
SAFF	**[Safety]** (SAFF): Safety function trip	
SCF1	**[Motor short circuit]** (SCF1): Motor short circuit (hard detection)	
SCF3	**[Ground short circuit]** (SCF3): Direct ground short-circuit trip (hard detection)	
SCF4	**[IGBT short circuit]** (SCF4): IGBT short-circuit (hard detection)	
SCF5	**[Motor short circuit]** (SCF5): Load short-circuit during Igon load sequence (hard detection)	
SLF1	**[Modbus com.]** (SLF1): Modbus local serial communication interruption	
SLF2	**[PC com.]** (SLF2): PC Software communication interruption	
SLF3	**[HMI com.]** (SLF3): Remote terminal communication interruption	
SOF	**[Overspeed]** (SOF): Overspeed	
SPF	**[Speed fdback loss]** (SPF): Speed feedback loss	
SSF	**[Torque/current lim]** (SSF): Torque current limitation detected fault	
tJF	**[IGBT overheat]** (tJF): IGBT overheating	
tnF	**[Auto-tuning]** (tnF): Tune detected fault	
ULF	**[Pr.Underload Flt]** (ULF): Torque underload	
USF	**[Undervoltage]** (USF): Undervoltage	

Parameters described in this page can be accessed by: DRI- > MON- > AFI-

Code	Name / Description	Unit
AF I-	**[MORE FAULT INFO]** Additional detected fault information.	
CnF	**[Network fault]** Communication option card fault code. This parameter is read-only. The fault code remains saved in the parameter, even if the cause disappears. The parameter is reset after the drive is disconnected and then reconnected. The values of this parameter depend on the network card. Consult the manual for the corresponding card.	
ILF I	**[Internal link fault 1]** Communication interruption between option card 1 and drive. This parameter is read-only. The fault code remains saved in the parameter, even if the cause disappears. The parameter is reset after the drive is disconnected and then reconnected.	
SFFE	**[Safety fault reg.] (1)** Safety function fault error register. Bit0 = 1: Logic inputs debounce time-out (verify value of debounce time LIDT according to the application) Bit1 Reserved Bit2 = 1: Motor speed sign has changed during SS1 ramp Bit3 = 1: Motor speed has reached the frequency limit threshold during SS1 ramp. Bit4: Reserved Bit5: Reserved Bit6 = 1: Motor speed sign has changed during SLS limitation Bit7 = 1: Motor speed has reached the frequency limit threshold during SS1 ramp. Bit8: Reserved Bit9: Reserved Bit10: Reserved Bit11: Reserved Bit12: Reserved Bit13 = 1: Not possible to measure the motor speed (verify the motor wiring connection) Bit14 = 1: Motor ground short-circuit detected (verify the motor wiring connection) Bit15 = 1: Motor phase to phase short-circuit detected (verify the motor wiring connection)	
SAF I	**[Safety fault Reg1] (1)** Safety fault register 1. Application control error register. Bit0 = 1: PWRM consistency detected error Bit1 = 1: Safety functions parameters detected error Bit2 = 1: Application auto test has detected an error Bit3 = 1: Diagnostic verification of safety function has detected an error Bit4 = 1: Logical input diagnostic has detected an error Bit5 = 1: Application hardware watchdog active Bit6 = 1: Application watchdog management active Bit7 = 1: Motor control detected error Bit8 = 1: Internal serial link core detected error Bit9 = 1: Logical input activation detected error Bit10 = 1: Safe Torque Off function has triggered an error Bit11 = 1: Application interface has detected an error of the safety functions Bit12 = 1: Safe Stop 1 function has detected an error of the safety functions Bit13 = 1: Safely Limited Speed function has triggered an error Bit14 = 1: Motor data is corrupted Bit15 = 1: Internal serial link data flow detected error	

(1) Hexadecimal values are displayed on the Graphic display terminal
Example:
SFFE = **0x0008** in Hexadecimal
SFFE = Bit **3**

Code	Name / Description	Unit
SAF2	**[Safety fault Reg2] (1)** Safety fault register 2 Motor Control error register Bit0 = 1 : Consistency stator frequency verification has detected an error Bit1 = 1 : Stator frequency estimation detected error Bit2 = 1 : Motor control watchdog management is active Bit3 = 1 : Motor control hardware watchdog is active Bit4 = 1 : Motor control auto test has detected an error Bit5 = 1 : Chain testing detected error Bit6 = 1 : Internal serial link core detected error Bit7 = 1 : Direct short-circuit detected error Bit8 = 1 : PWM driver detected error Bit9 : Reserved Bit10 : Reserved Bit11 = 1 : Application interface has detected an error of the safety functions Bit12 = 1 : Reserved Bit13: Reserved Bit14 = 1 : Motor data is corrupted Bit15 = 1 : Internal serial link data flow detected error	
SF00	**[SAFF Subcode 0] (1)** Safety fault subregister 00 Appplication auto test error register Bit0 : Reserved Bit1 = 1 : Ram stack overflow Bit2 = 1 : Ram address integrity error Bit3 = 1 : Ram data access error Bit4 = 1 : Flash Checksum Error Bit5 : Reserved Bit6 : Reserved Bit7 : Reserved Bit8 : Reserved Bit9 = 1 : Fast task overflow Bit10 = 1 : Slow task overflow Bit11 = 1 : Application task overflow Bit12 : Reserved Bit13 : Reserved Bit14 = 1 : PWRM line is not activated during initialization phase Bit15 = 1 : Application hardware Watch Dog is not running after initialization	
SF01	**[SAFF Subcode 1] (1)** Safety fault subregister 01 Logical input diagnostics error register Bit0 = 1 : Management - state machine error Bit1 = 1 : Data required for test management are corrupted Bit2 = 1 : Channel selection detected error Bit3 = 1 : Testing - state machine detected error Bit4 = 1 : Test request is corrupted Bit5 = 1 : Pointer to test method is corrupted Bit6 = 1 : Incorrect test action provided Bit7 = 1 : Detected Error in results collecting Bit8 = 1 : LI3 detected error. Cannot activate safe function Bit9 = 1 : LI4 detected error. Cannot activate safe function Bit10 = 1 : LI5 detected error. Cannot activate safe function Bit11 = 1 : LI6 detected error. Cannot activate safe function Bit12 = 1 : Test sequence updated while a diagnostic is in progress Bit13 = 1 : Detected error in test pattern management Bit14 : Reserved Bit15 : Reserved	

(1) Hexadecimal values are displayed on the Graphic display terminal
Example:
SFFE = **0x0008** in Hexadecimal
SFFE = Bit **3**

Code	Name / Description	Unit
SF02	**[SAFF Subcode 2] (1)** Safety fault subregister 02 Application Watchdog Management detected error register Bit0 = 1 : Fast task detected error Bit1 = 1 : Slow task detected error Bit2 = 1 : Application task detected error Bit3 = 1 : Background task detected error Bit4 = 1 : Safety fast task/input detected error Bit5 = 1 : Safety slow task/input detected error Bit6 = 1 : Safety app task/input detected error Bit7 = 1 : Safety app task/treatment detected error Bit8 = 1 : Safety background task detected error Bit9 : Reserved Bit10 : Reserved Bit11 : Reserved Bit12 : Reserved Bit13 : Reserved Bit14 : Reserved Bit15 : Reserved	
SF03	**[SAFF Subcode 3] (1)** Safety fault subregister 03 Bit0 = 1 : Debounce time out Bit1 = 1 : Input not consistent Bit2 = 1 : Consistency check - state machine detected error Bit3 = 1 : Consistency check - debounce timeout corrupted Bit4 = 1 : Response time data detected error Bit5 = 1 : Response time corrupted Bit6 = 1 : Undefined consumer queried Bit7 = 1 : Configuration detected error Bit8 = 1 : Inputs are not in nominal mode Bit9 : Reserved Bit10 : Reserved Bit11 : Reserved Bit12 : Reserved Bit13 : Reserved Bit14 : Reserved Bit15 : Reserved	
SF04	**[SAFF Subcode 4] (1)** Safety fault subregister 04 [Safe Torque Off] St0 detected error register Bit0 = 1 : No signal configured Bit1 = 1 : State machine detected error Bit2 = 1 : Internal data detected error Bit3 : Reserved Bit4 : Reserved Bit5 : Reserved Bit6 : Reserved Bit7 : Reserved Bit8 : Reserved Bit9 : Reserved Bit10 : Reserved Bit11 : Reserved Bit12 : Reserved Bit13 : Reserved Bit14 : Reserved Bit15 : Reserved	

(1) Hexadecimal values are displayed on the Graphic display terminal
Example:
SFFE = **0x0008** in Hexadecimal
SFFE = Bit **3**

Code	Name / Description	Unit
SF05	**[SAFF Subcode 5] (1)** Safety fault subregister 05 [Safe Stop 1] SS1 detected error register Bit0 = 1 : State machine detected error Bit1 = 1 : Motor speed sign changed during stop Bit2 = 1 : Motor speed reached trip area Bit3 = 1 : Theoretical motor speed corrupted Bit4 = 1 : Unauthorized configuration Bit5 = 1 : Theoretical motor speed computation detected error Bit6 : Reserved Bit7 = 1 : Speed sign check: consistency detected error Bit8 = 1 : Internal SS1 request corrupted Bit9 : Reserved Bit10 : Reserved Bit11 : Reserved Bit12 : Reserved Bit13 : Reserved Bit14 : Reserved Bit15 : Reserved	
SF06	**[SAFF Subcode 6] (1)** Safety fault subregister 06 [Safely Limited Speed] SLS detected error register Bit0 = 1 : State machine error register Bit1 = 1 : Motor speed sign changed during limitation Bit2 = 1 : Motor speed has reached the frequency limit threshold Bit3 = 1 : Data corruption Bit4 : Reserved Bit5 : Reserved Bit6 : Reserved Bit7 : Reserved Bit8 : Reserved Bit9 : Reserved Bit10 : Reserved Bit11 : Reserved Bit12 : Reserved Bit13 : Reserved Bit14 : Reserved Bit15 : Reserved	
SF07	**[SAFF Subcode 7] (1)** Safety fault subregister 07 Application Watchdog Management detected error register Bit0 : Reserved Bit1 : Reserved Bit2 : Reserved Bit3 : Reserved Bit4 : Reserved Bit5 : Reserved Bit6 : Reserved Bit7 : Reserved Bit8 : Reserved Bit9 : Reserved Bit10 : Reserved Bit11 : Reserved Bit12 : Reserved Bit13 : Reserved Bit14 : Reserved Bit15 : Reserved	

(1) Hexadecimal values are displayed on the Graphic display terminal
Example:
SFFE = **0x0008** in Hexadecimal
SFFE = Bit **3**

Code	Name / Description	Unit
SF08	**[SAFF Subcode 8] (1)** Safety fault subregister 08 Application Watchdog Management detected error register Bit0 = 1 : PWM task detected error Bit1 = 1 : Fixed task detected error Bit2 = 1 : ATMC watchdog detected error Bit3 = 1 : DYNFCT watchdog detected error Bit4 : Reserved Bit5 : Reserved Bit6 : Reserved Bit7 : Reserved Bit8 : Reserved Bit9 : Reserved Bit10 : Reserved Bit11 : Reserved Bit12 : Reserved Bit13 : Reserved Bit14 : Reserved Bit15 : Reserved	
SF09	**[SAFF Subcode 9] (1)** Safety fault subregister 09 Motor control Auto Test detected error register Bit0 : Reserved Bit1 = 1 : Ram stack overflow Bit2 = 1 : Ram address integrity detected error Bit3 = 1 : Ram data access detected error Bit4 = 1 : Flash Checksum detected error Bit5 : Reserved Bit6 : Reserved Bit7 : Reserved Bit8 : Reserved Bit9 = 1 : 1ms task overflow Bit10 = 1 : PWM task overflow Bit11 = 1 : Fixed task overflow Bit12 : Reserved Bit13 : Reserved Bit14 = 1 : Unwanted interruption Bit15 = 1 : Hardware WD is not running after initialization	
SF10	**[SAFF Subcode 10] (1)** Safety fault subregister 10 Motor control direct short-circuit detected error register Bit0 = 1 : Ground short circuit - Configuration detected error Bit1 = 1 : Phase to phase short circuit - Configuration detected error Bit2 = 1 : Ground short circuit Bit3 = 1 : Phase to phase short circuit Bit4 : Reserved Bit5 : Reserved Bit6 : Reserved Bit7 : Reserved Bit8 : Reserved Bit9 : Reserved Bit10 : Reserved Bit11 : Reserved Bit12 : Reserved Bit13 : Reserved Bit14 : Reserved Bit15 : Reserved	

(1) Hexadecimal values are displayed on the Graphic display terminal
Example:
SFFE = **0x0008** in Hexadecimal
SFFE = Bit **3**

Code	Name / Description	Unit
SF11	**[SAFF Subcode 11] (1)** Safety fault subregister 11 Motor Control dynamic check of activity detected error register Bit0 = 1 : Application requested a diagnostic of direct short circuit Bit1 = 1 : Application requested consistency verification of stator frequency estimation (voltage and current) Bit2 = 1 : Application requested diagnostic of SpdStat provided by Motor Control Bit3 : Reserved Bit4 : Reserved Bit5 : Reserved Bit6 : Reserved Bit7 : Reserved Bit8 = 1 : Motor Control safe diagnostic of direct short circuit is enabled Bit9 = 1 : Motor Control consistency check of stator frequency estimation is enabled Bit10 = 1 : Motor Control diagnostic of SpdStat provided by Motor Control is enabled Bit11 : Reserved Bit12 : Reserved Bit13 : Reserved Bit14 : Reserved Bit15 : Reserved	
dGt-	**[DIAGNOSTICS] (continued)**	
tAC	**[IGBT alarm counter]** Transistor alarm time counter (length of time the "IGBT temperature" alarm has been active).	
tAC2	**[Min. freq time]** Transistor alarm time counter at minimum switching frequency (length of time the "IGBT temperature" alarm has been active after the drive has automatically reduced the switching frequency to the minimum value).	
ntJ ★	**[IGBT alarm Nb]** Transistor alarm counter: number detected during lifecycle. Visible if [3.1 ACCESS LEVEL] (LAC) is set to [Expert] (EPr).	
SEr-	**[SERVICE MESSAGE]** See page 287.	
rFLt nO YES	**[Reset past faults]** Reset all resetable previous detected faults. **[No]** (nO): Reset not active **[YES]** (YES): Reset in progress	

★ These parameters only appear if the corresponding function has been selected in another menu. When the parameters can also be accessed and adjusted from within the configuration menu for the corresponding function, their description is detailed in these menus, on the pages indicated, to aid programming.

(1) Hexadecimal values are displayed on the Graphic display terminal
Example:
SFFE = **0x0008** in Hexadecimal
SFFE = Bit **3**

Code	Name / Description	Unit
MOn-	**[1.2 MONITORING] (continued)**	
COd-	**[PASSWORD]** HMI Password. If you have lost your code, please contact Schneider Electric.	
CSt	**[State]** Status of the drive (lock/unlock). Information parameter, cannot be modified. LC **[Locked]** (LC): The drive is locked by a password ULC **[Unlocked]** (ULC): The drive is not locked by a password	
COd	**[PIN code 1]** Confidential code. Enables the drive configuration to be protected using an access code. When access is locked by means of a code, only the parameters in the **[1.2 MONITORING]** (MOn-) and **[1.1 SPEED REFERENCE]** (rEF-) menus can be accessed. The MODE key can be used to switch between menus. **Note:** Before entering a code, do not forget to make a careful note of it. OFF **[OFF]** (OFF): No access locking codes. - To lock access, enter a code (2 to 9,999). The display can be incremented using the jog dial. Then press ENT. **[ON]** (On) appears on the screen to indicate that access has been locked. On **[ON]** (On): A code is locking access (2 to 9,999). - To unlock access, enter the code (incrementing the display using the jog dial) and press ENT. The code remains on the display and access is unlocked until the next time the drive is turned off. Access will be locked again the next time the drive is turned on. - If an incorrect code is entered, the display changes to **[ON]** (On), and access remains locked. Access is unlocked (the code remains on the screen). - To reactivate locking with the same code when access has been unlocked, return to **[ON]** (On) using the jog dial and then press ENT. **[ON]** (On) remains on the screen to indicate that access has been locked. - To lock access with a new code when access has been unlocked, enter the new code (increment the display using the jog dial) and then press ENT. **[ON]** (On) appears on the screen to indicate that access has been locked. - To clear locking when access has been unlocked, return to **[OFF]** (OFF) using the jog dial and then press ENT. **[OFF]** (OFF) remains on the display. Access is unlocked and will remain so until the next restart.	
COd2 ★	**[PIN code 2]** Confidential code 2. Visible if **[3.1 ACCESS LEVEL]** (LAC) is set to **[Expert]** (EPr). OFF The value **[OFF]** (OFF) indicates that no password has been set **[Unlocked]** (ULC). On The value **[ON]** (On) indicates that the drive configuration is protected and an access code must be entered in order to unlock it. Once the correct code has been entered, it remains on the display and the drive is unlocked until the next time the power supply is disconnected. 8888 PIN code 2 is an unlock code known only to Schneider Electric Product Support.	
ULr	**[Upload rights]** ULr0 **[Permitted]** (ULr0): Means that SoMove or the graphic display terminal can save the whole configuration (password, protections, configuration). When the configuration is edited, only the non protected parameters will be accessible. ULr1 **[Not allowed]** (ULr1): Means that SoMove or the graphic display terminal cannot save the configuration	
dLr	**[Download rights]** dLr0 **[Locked drv]** (dLr0): Locked drive: means that the configuration can be downloaded only in a locked drive which configuration has the same password. If the passwords are different, download is not permitted. dLr1 **[Unlock. drv]** (dLr1): Unlocked drive: means that the configuration can be downloaded only in a drive without active password dLr2 **[Not allowed]** (dLr2): Not allowed: the configuration cannot be downloaded dLr3 **[Lock/unlock]** (dLr3): Lock. + Not: download is permitted following case 0 or case 1	

★ These parameters only appear if the corresponding function has been selected in another menu. When the parameters can also be accessed and adjusted from within the configuration menu for the corresponding function, their description is detailed in these menus, on the pages indicated, to aid programming.

Parameter that can be modified during operation or when stopped.

Configuration Mode (ConF)

6

What's in this Chapter?

This chapter contains the following topics:

Topic	Page
Introduction	76
Organization tree	77
My Menu	78
Factory Settings	79
Macro Configuration	80
Full	83

Introduction

Configuration mode includes 4 parts:

1. "My Menu" menu includes up to 25 parameters available for user customization using the graphic display terminal or SoMove software.

2. Store/recall parameter set: These 2 functions are used to store and recall customer settings.

3. **[Macro configuration]** (CFG) parameter which allows to load predefined values for applications (see page 80).

4. FULL: This menu provides access to all other parameters. It includes 10 sub-menus:

- **[SIMPLY START]** (SIM-) page 83
- **[SETTINGS]** (SEt-) page 87
- **[MOTOR CONTROL]** (drC-) page 102
- **[INPUTS / OUTPUTS CFG]** (I_O-) page 122
- **[COMMAND]** (CtL-) page 151
- **[FUNCTION BLOCK]** (FbM-) page 155
- **[APPLICATION FUNCT.]** (FUn-) page 164
- **[FAULT MANAGEMENT]** (FLt-) page 247
- **[COMMUNICATION]** (COM-) page 272
- **[ACCESS LEVEL]** (LAC) page 278

Organization tree

Displayed parameter values are given as examples only.

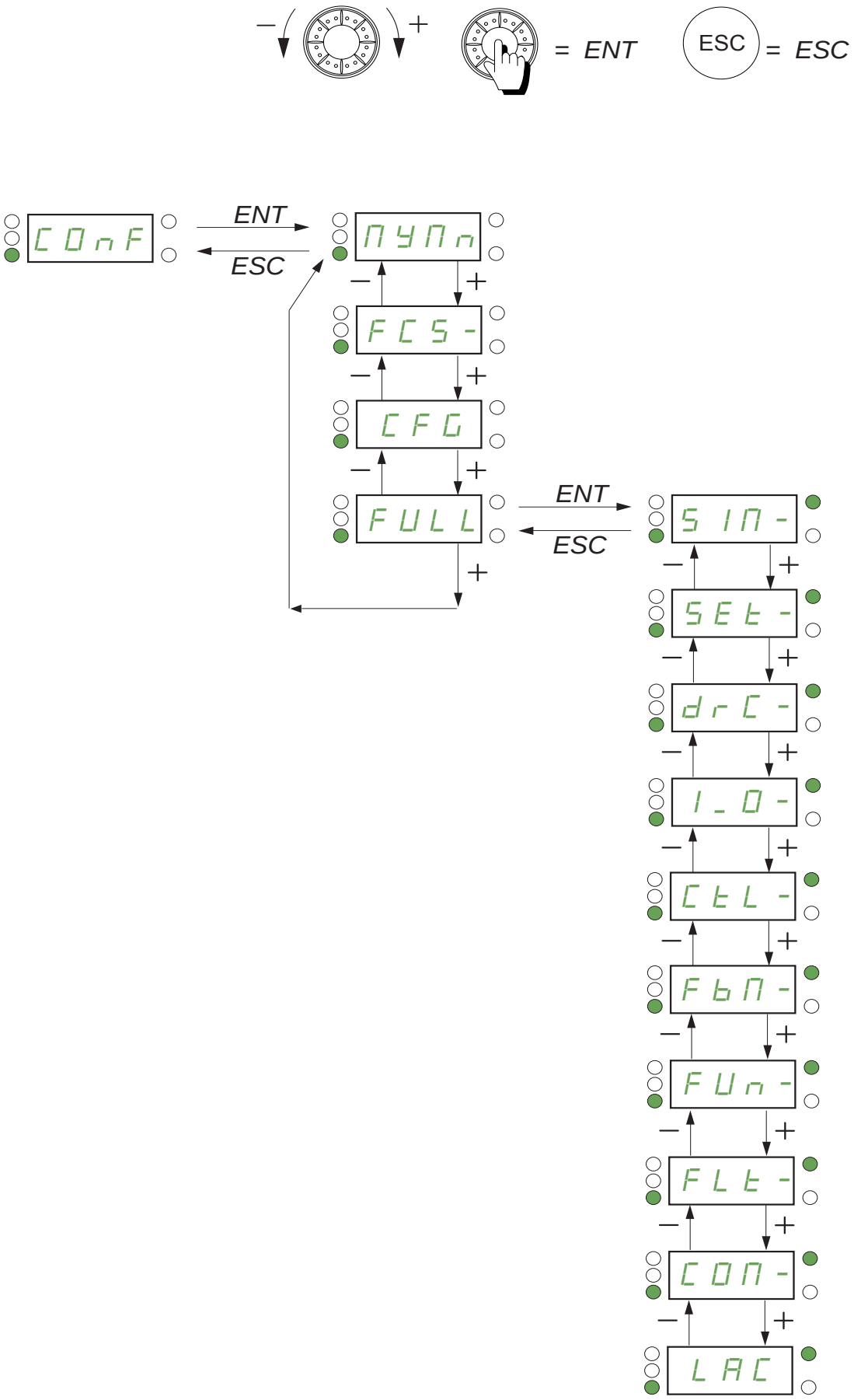

Parameters described in this page can be accessed by: DRI- > CONF > MYMN-

My Menu

Code	Name / Description
CONF	**[1.3 CONFIGURATION]**
MYMN	**[MY MENU]**
	This menu contains the parameters selected in the **[3.4 DISPLAY CONFIG.]** (dCF-) menu on page 285.

Parameters described in this page can be accessed by: DRI- > CONF > FCS-

Factory Settings

Code	Name / Description	Factory setting
CONF	**[1.3 CONFIGURATION]**	
FCS-	**[FACTORY SETTINGS]**	
FCS1	**[Config. Source]**	**[Macro-Conf]** (In1)
★	Choice of source configuration. If the configuration switching function is configured, it will not be possible to access **[Config 1]** (CFG1) and **[Config 2]** (CFG2). **Note:** To load the drive's presettings previously memorized (**[Config 1]** (Str1) or **[Config 2]** (Str2)), select the source configuration **[Config. Source]** (FCS1) = **[Config 1]** (CFG1) or **[Config 2]** (CFG2) followed by a factory setting **[Goto FACTORY SETTINGS]** (GFS) = **[YES]** (YES).	
In1	**[Macro-Conf]** (In1): Factory configuration, return to selected macro configuration	
CFG1	**[Config 1]** (CFG1): Configuration 1	
CFG2	**[Config 2]** (CFG2): Configuration 2	
Fry-	**[PARAMETER GROUP LIST]**	
	Selection of menus to be loaded. See the multiple selection procedure on page 33 for the integrated display terminal and page 24 for the graphic display terminal. **Note:** In factory configuration and after a return to "factory settings", **[PARAMETER GROUP LIST]** will be empty.	
ALL	**[All]** (ALL): All parameters (the function blocks program will also be erased)	
drM	**[Drive configuration]** (drM): The **[1 DRIVE MENU]** (dr1-) menu without **[COMMUNICATION]** (COM-). In the **[2.4 DISPLAY CONFIG.]** menu, **[Return std name]** (GSP) page 287 returns to **[No]** (nO).	
MOt	**[Motor param]** (MOt): Motor parameters, see page 295.	
	The following selections can only be accessed if **[Config. Source]** (FCS1) is set to **[Macro-Conf.]** (In1).	
COM	**[Comm. menu]** (COM): The **[COMMUNICATION]** (COM-) menu without either **[Scan. In1 address]** (nMA1) to **[Scan. In8 address]** (nMA8) or **[Scan.Out1 address]** (nCA1) to **[Scan.Out8 address]** (nCA8).	
dIS	**[Display config.]** (dIS): The **[3.3 MONITORING CONFIG.]** (MCF-) menu	
GFS	**[Goto FACTORY SETTINGS]**	
★ ⌛ 2 s	**⚠ DANGER** **UNINTENDED EQUIPMENT OPERATION** Check that the modification of the current configuration is compatible with the wiring diagram used. **Failure to follow these instructions will result in death or serious injury.**	
	It is only possible to revert to the factory settings if at least one group of parameters has previously been selected.	
nO	**[No]** (nO): No	
YES	**[Yes]** (YES): The parameter changes back to **[No]** (nO) automatically as soon as the operation is complete	
SCS1	**[Save config]**	**[No]** (nO)
★	The active configuration to be saved does not appear for selection. For example, if it is **[Config 0]** (Str0), only **[Config 1]** (Str1) and **[Config 2]** (Str2) appear. The parameter changes back to **[No]** (nO) as soon as the operation is complete.	
nO	**[No]** (nO): No	
Str0	**[Config 0]** (Str0): Press and hold down the ENT key for 2 s	
Str1	**[Config 1]** (Str1): Press and hold down the ENT key for 2 s	
Str2	**[Config 2]** (Str2): Press and hold down the ENT key for 2 s	

★ These parameters only appear if the corresponding function has been selected in another menu. When the parameters can also be accessed and adjusted from within the configuration menu for the corresponding function, their description is detailed in these menus, on the pages indicated, to aid programming.

⌛ 2 s To change the assignment of this parameter, press the ENT key for 2 s.

Parameters described in this page can be accessed by: DRI- > CONF

Macro Configuration

Code	Name / Description	Factory setting
CONF	**[1.3 CONFIGURATION] (continued)**	
CFG	**[Macro configuration]**	**[Start/Stop]** (Sts)
★	**⚠ DANGER** **UNINTENDED EQUIPMENT OPERATION** Check that the selected macro configuration is compatible with the wiring diagram used. **Failure to follow these instructions will result in death or serious injury.**	
⌛ 2 s		
Sts	**[Start/Stop]** (Sts): Start/stop	
HdG	**[M. handling]** (HdG): Handling	
HSt	**[Hoisting]** (HSt): Hoisting	
GEn	**[Gen. Use]** (GEn): General use	
PId	**[PID regul.]** (PId): PID regulation	
nEt	**[Network C.]** (nEt): Communication bus	

★ These parameters only appear if the corresponding function has been selected in another menu. When the parameters can also be accessed and adjusted from within the configuration menu for the corresponding function, their description is detailed in these menus, on the pages indicated, to aid programming.

⌛ 2 s To change the assignment of this parameter, press the ENT key for 2 s.

Example of total return to factory settings

- **[Config. Source]** (FCSI) is set to **[Macro-Conf]** (InI)
- **[PARAMETER GROUP LIST]** (Fry-) is set to **[All]** (ALL)
- **[Goto FACTORY SETTINGS]** (GFS) is set to **[Yes]** (YES)

Assignment of the inputs/outputs

Input/ output	[Start/Stop]	[M. handling]	[Gen. Use]	[Hoisting]	[PID regul.]	[Network C.]
[AI1]	**[Ref.1 channel]**	**[Ref.1 channel]**	**[Ref.1 channel]**	**[Ref.1 channel]**	**[Ref.1 channel]** (PID reference)	**[Ref.2 channel]** (**[Ref.1 channel]** = integrated Modbus) (1)
[AI2]	**[No]**	**[Summing ref. 2]**	**[Summing ref. 2]**	**[No]**	**[PID feedback]**	**[No]**
[AI3]	**[No]**	**[No]**	**[No]**	**[No]**	**[No]**	**[No]**
[AO1]	**[No]**	**[No]**	**[No]**	**[No]**	**[No]**	**[No]**
[R1]	**[No drive flt]**	**[No drive flt]**	**[No drive flt]**	**[No drive flt]**	**[No drive flt]**	**[No drive flt]**
[R2]	**[No]**	**[No]**	**[No]**	**[Brk control]**	**[No]**	**[No]**
[LI1] (2-wire)	**[Forward]**	**[Forward]**	**[Forward]**	**[Forward]**	**[Forward]**	**[Forward]**
[LI2] (2-wire)	**[Reverse]**	**[Reverse]**	**[Reverse]**	**[Reverse]**	**[Reverse]**	**[Reverse]**
[LI3] (2-wire)	**[No]**	**[2 preset speeds]**	**[Jog]**	**[Fault reset]**	**[PID integral reset]**	**[Ref. 2 switching]**
[LI4] (2-wire)	**[No]**	**[4 preset speeds]**	**[Fault reset]**	**[External fault]**	**[2 preset PID ref.]**	**[Fault reset]**
[LI5] (2-wire)	**[No]**	**[8 preset speeds]**	**[Torque limitation]**	**[No]**	**[4 preset PID ref.]**	**[No]**
[LI6] (2-wire)	**[No]**	**[Fault reset]**	**[No]**	**[No]**	**[No]**	**[No]**
[LI1] (3-wire)	**[Drive running]**	**[Drive running]**	**[Drive running]**	**[Drive running]**	**[Drive running]**	**[Drive running]**
[LI2] (3-wire)	**[Forward]**	**[Forward]**	**[Forward]**	**[Forward]**	**[Forward]**	**[Forward]**
[LI3] (3-wire)	**[Reverse]**	**[Reverse]**	**[Reverse]**	**[Reverse]**	**[Reverse]**	**[Reverse]**
[LI4] (3-wire)	**[No]**	**[2 preset speeds]**	**[Jog]**	**[Fault reset]**	**[PID integral reset]**	**[Ref. 2 switching]**
[LI5] (3-wire)	**[No]**	**[4 preset speeds]**	**[Fault reset]**	**[External fault]**	**[2 preset PID ref.]**	**[Fault reset]**
[LI6] (3-wire)	**[No]**	**[8 preset speeds]**	**[Torque limitation]**	**[No]**	**[4 preset PID ref.]**	**[No]**
[LO1]	**[No]**	**[No]**	**[No]**	**[No]**	**[No]**	**[No]**
Graphic display terminal keys						
F1 key	**[No]**	**[No]**	**[No]**	**[No]**	**[No]**	Control via graphic display terminal
F2, F3, F4 keys	**[No]**	**[No]**	**[No]**	**[No]**	**[No]**	**[No]**

In 3-wire control, the assignment of inputs LI1 to LI6 shifts.

(1) To start with, integrated Modbus **[Modbus Address]** (A d d) must first be configured, page 273.

Note: These assignments are reinitialized every time the macro configuration changes.

Other configurations and settings

In addition to the assignment of inputs/outputs, other parameters are assigned **only in the Hoisting macro configuration**.

Hoisting:

- **[Movement type]** (bSt) is set to **[Hoisting]** (UEr) page 191
- **[Brake contact]** (bCI) is set to **[No]** (nO) page 191
- **[Brake impulse]** (bIP) is set to **[Yes]** (YES) page 191
- **[Brake release I FW]** (Ibr) is set to 0 A page 191
- **[Brake Release time]** (brt) is set to 0 s page 191
- **[Brake release freq]** (bIr) is set to **[Auto]** (AUtO) page 192
- **[Brake engage freq]** (bEn) is set to **[Auto]** (AUtO) page 192
- **[Brake engage time]** (bEt) is set to 0 s page 192
- **[Engage at reversal]** (bEd) is set to **[No]** (nO) page 192
- **[Jump at reversal]** (JdC) is set to **[Auto]** (AUtO) page 193
- **[Time to restart]** (ttr) is set to 0 s page 193
- **[Current ramp time]** (brr) is set to 0 s page 195
- **[Low speed]** (LSP) is set to Rated motor slip calculated by the drive, page 85
- **[Output Phase Loss]** (OPL) is set to **[Yes]** (YES) page 253
  No further modifications can be made to this parameter.
- **[Catch on the fly]** (FLr) is set to **[No]** (nO) page 250
  No further modifications can be made to this parameter.

Return to factory settings:
Returning to factory settings with **[Config. Source]** (FCSI) is set to **[Macro-Conf]** (InI) page 79 will return the drive to the selected macro configuration. The **[Macro configuration]** (CFG) parameter does not change, although **[Customized macro]** (CCFG) disappears.

Note: The factory settings that appear in the parameter tables correspond to **[Macro configuration]** (CFG) = **[Start/Stop]** (StS). This is the macro configuration set at the factory.

Example diagrams for use with the macro configurations

[Hoisting] (HSt) diagram

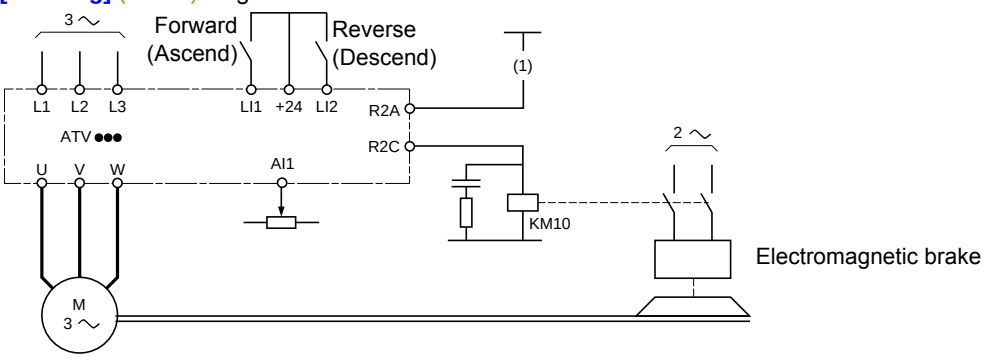

(1) Whithout integrated safety function, a contact on the Preventa module must be inserted in the brake control circuit to engage it when the "Safe Torque Off" safety function is activated (see connection diagrams in the Installation manual).

Parameters described in this page can be accessed by: DRI- > CONF > FULL > SIM-

Full

Code	Name / Description	Adjustment range	Factory setting
CONF	**[1.3 CONFIGURATION]**		
FULL	**[FULL]**		
SIM-	**[SIMPLY START]**		
tCC	**[2/3 wire control]**		[2 wire] (2C)

2 s

⚠ DANGER

UNINTENDED EQUIPMENT OPERATION
When this parameter is changed, **[Reverse assign.]** (rrS) and **[2 wire type]** (tCt) parameters, and all the assignments involving the logic inputs will revert to their default values.
Check that this change is compatible with the wiring diagram used.
Failure to follow these instructions will result in death or serious injury.

See **[2/3 wire control]** (tCC) page 122.

2C **[2 wire]** (2C)
2-wire control (level commands): This is the input state (0 or 1) or edge (0 to 1 or 1 to 0), which controls running or stopping.

Example of "source" wiring:

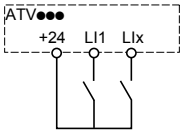

LI1: forward
LIx: reverse

3C **[3 wire]** (3C)
3-wire control (pulse commands): A "forward" or "reverse" pulse is sufficient to command starting, a "stop" pulse is sufficient to command stopping.

Example of "source" wiring:

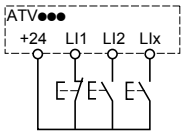

LI1: stop
LI2: forward
LIx: reverse

CFG	**[Macro configuration]**		[Start/Stop] (StS)

★

2 s

⚠ DANGER

UNINTENDED EQUIPMENT OPERATION
Check that the selected macro configuration is compatible with the wiring diagram used.
Failure to follow these instructions will result in death or serious injury.

See **[Macro configuration]** (CFG) page 80.

StS **[Start/Stop]** (StS): Start/stop
HdG **[M. handling]** (HdG): Handling
HSt **[Hoisting]** (HSt): Hoisting
GEn **[Gen. Use]** (GEn): General use
PId **[PID regul.]** (PId): PID regulation
nEt **[Network C.]** (nEt): Communication bus

Parameters described in this page can be accessed by: DRI- > CONF > FULL > SIM-

Code	Name / Description	Adjustment range	Factory setting
CCFG ★	**[Customized macro]** Read-only parameter, only visible if at least one macro configuration parameter has been modified. nO **[No]** (nO): No YES **[Yes]** (YES): Yes		
bFr	**[Standard mot. freq]**		**[50Hz IEC]** (50)
	This parameter modifies the presets of the following parameters: **[Rated motor volt.]** (UnS) below, **[High speed]** (HSP) page 85, **[Freq. threshold]** (Ftd) page 99, **[Rated motor freq.]** (FrS) and **[Max frequency]** (tFr) . 50 **[50Hz IEC]** (50): Drive 50 Hz 60 **[60Hz NEMA]** (60): Drive 60 Hz		
IPL ★	**[Input phase loss]**		Yes or No, according to drive rating
	This parameter is only accessible in this menu on 3-phase drives. If one phase disappears, the drive switches to fault mode **[Input phase loss]** (PHF), but if 2 or 3 phases disappear, the drive continues to operate until it trips on an undervoltage detected fault (the drive trips in **[Input phase loss]** (PHF) if there is an input phase loss and if this leads to performance decrease). See **[Input phase loss]** (IPL) page 253. nO **[Ignore]** (nO): Detected fault ignored, to be used when the drive is supplied via a single-phase supply or by the DC bus YES **[Freewheel]** (YES): With freewheel stop		
nPr ★	**[Rated motor power]**		According to drive rating
	Rated motor power given on the nameplate, in kW if **[Standard mot. freq]** (bFr) is set to **[50Hz IEC]** (50), in HP if **[Standard mot. freq]** (bFr) is set to **[60Hz NEMA]** (60). See **[Rated motor power]** (nPr) page 104.		
UnS ★	**[Rated motor volt.]**	100 to 480 V	According to drive rating
	Rated motor voltage given on the nameplate. ATV32●●●M2: 100 to 240 V – ATV32●●●N4: 200 to 480 V. See **[Rated motor volt.]** (UnS) page 104.		
nCr ★	**[Rated mot. current]**	0.25 to 1.5 In (1)	According to drive rating and **[Standard mot. freq]** (bFr)
	Rated motor current given on the nameplate. See **[Rated mot. current]** (nCr) page 104.		
FrS ★	**[Rated motor freq.]**	10 to 800 Hz	50 Hz
	Rated motor frequency given on the nameplate. The factory setting is 50 Hz, or preset to 60 Hz if **[Standard mot. freq]** (bFr) is set to 60 Hz. This parameter is not visible if **[Motor control type]** (Ctt) page 102 is set to **[Sync. mot.]** (SYn). See **[Rated motor freq.]** (FrS) page 104.		
nSP ★	**[Rated motor speed]**	0 to 65,535 rpm	According to drive rating
	Rated motor speed given on the nameplate. This parameter is not visible if **[Motor control type]** (Ctt) page 102 is set to **[Sync. mot.]** (SYn). See **[Rated motor speed]** (nSP) page 104. 0 to 9,999 rpm then 10.00 to 60.00 krpm on the integrated display terminal. If, rather than the rated speed, the nameplate indicates the synchronous speed and the slip in Hz or as a %, calculate the rated speed as follows: Nominal speed = Synchronous speed x $\frac{100 - \text{slip as a \%}}{100}$ or Nominal speed = Synchronous speed x $\frac{50 - \text{slip in Hz}}{50}$ (50 Hz motors) or Nominal speed = Synchronous speed x $\frac{60 - \text{slip in Hz}}{60}$ (60 Hz motors)		

Parameters described in this page can be accessed by: DRI- > CONF > FULL > SIM-

Code	Name / Description	Adjustment range	Factory setting
tFr	**[Max frequency]** The factory setting is 60 Hz, or preset to 72 Hz if **[Standard mot. freq]** (bFr) is set to 60 Hz. The maximum value is limited by the following conditions: It must not exceed 10 times the value of **[Rated motor freq.]** (FrS). See **[Max frequency]** (tFr) page 102.	10 to 599 Hz	60 Hz
tUn ( )	**[Auto tuning]** For asynchronous motors, see page 105. For synchronous motors, see page 110.		**[No action]** (nO)
tUS	**[Auto tuning state]** This parameter is not saved at drive power off. It shows the Autotuning status since last power on. See **[Auto tuning state]** (tUS) page 105. tAb **[Not done]** (tAb): Autotune is not done PEnd **[Pending]** (PEnd): Autotune has been requested but not yet performed PrOG **[In Progress]** (PrOG): Autotune is in progress FAIL **[Failed]** (FAIL): Autotune has detected a fault dOnE **[Done]** (dOnE): The stator resistance measured by the auto-tuning function is used to control the motor		**[Not done]** (tAb)
StUn	**[Tune selection]** See **[Tune selection]** (StUn) page 105. tAb **[Default]** (tAb): The default stator resistance value is used to control the motor MEAS **[Measure]** (MEAS): The stator resistance measured by the auto-tuning function is used to control the motor CUS **[Custom]** (CUS): The stator resistance set manually is used to control the motor		**[Default]** (tAb)
ItH ( )	**[Mot. therm. current]** Motor thermal protection current, to be set to the rated current indicated on the motor nameplate. See **[Mot. therm. current]** (ItH) page 88.	0.2 to 1.5 In (1)	According to drive rating
ACC ( )	**[Acceleration]** Time to accelerate from 0 to the **[Rated motor freq.]** (FrS) (page 84). To have repeatability in ramps, the value of this parameter must be set according to the possibility of the application. See **[Acceleration]** (ACC) page 87.	0.00 to 6,000 s (2)	3.0 s
dEC ( )	**[Deceleration]** Time to decelerate from the **[Rated motor freq.]** (FrS) (page 84) to 0. To have repeatability in ramps, the value of this parameter must be set according to the possibility of the application. See **[Deceleration]** (dEC) page 87.	0.00 to 6,000 s (2)	3.0 s
LSP ( )	**[Low speed]** Motor frequency at minimum reference, can be set between 0 and **[High speed]** (HSP). See **[Low speed]** (LSP) page 87.	0 to 599 Hz	0
HSP ( )	**[High speed]** Motor frequency at maximum reference, can be set between **[Low speed]** (LSP) and **[Max frequency]** (tFr). The factory setting changes to 60 Hz if **[Standard mot. freq]** (bFr) is set to **[60Hz NEMA]** (60). See **[High speed]** (HSP) page 87.	0 to 599 Hz	50 Hz

(1) In corresponds to the rated drive current indicated in the Installation manual and on the drive nameplate.
(2) Range 0.01 to 99.99 s or 0.1 to 999.9 s or 1 to 6,000 s according to **[Ramp increment]** (Inr) page 167.

★ These parameters only appear if the corresponding function has been selected in another menu. When the parameters can also be accessed and adjusted from within the configuration menu for the corresponding function, their description is detailed in these menus, on the pages indicated, to aid programming.

( ) Parameter that can be modified during operation or when stopped.

2 s To change the assignment of this parameter, press the ENT key for 2 s.

Settings

With integrated display terminal

⚠ DANGER

UNINTENDED EQUIPMENT OPERATION
Check that changes made to the settings during operation do not present any danger.
We recommend stopping the drive before making any changes.
Failure to follow these instructions will result in death or serious injury.

From CONF menu

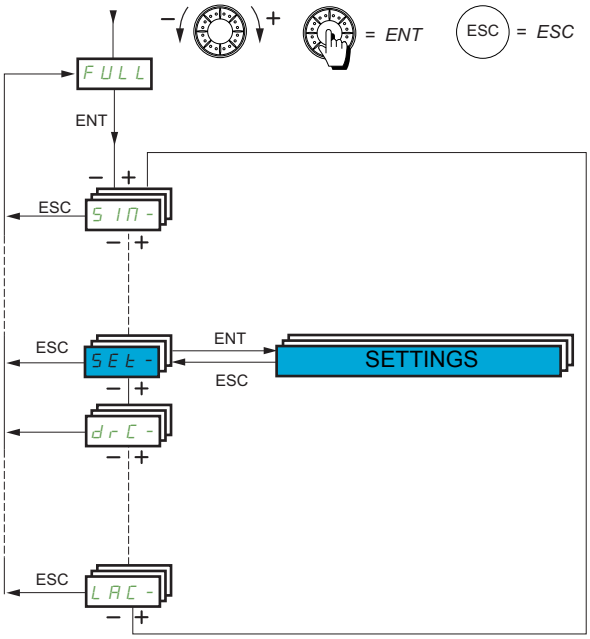

The adjustment parameters can be modified with the drive running or stopped.

Parameters described in this page can be accessed by: DRI- > CONF > FULL > SET-

Code	Name / Description	Adjustment range	Factory setting
FULL	**[FULL] (continued)**		
SET-	**[SETTINGS]**		
Inr	**[Ramp increment]**		0.1
	This parameter is valid for **[Acceleration]** (ACC), **[Deceleration]** (dEC), **[Acceleration 2]** (AC2) and **[Deceleration 2]** (dE2). See **[Ramp increment]** (Inr) page 167. 0.01 **[0,01]**: Ramp up to 99.99 seconds 0.1 **[0,1]**: Ramp up to 999.9 seconds 1 **[1]**: Ramp up to 6,000 seconds		
ACC	**[Acceleration]**	0.00 to 6,000 s (1)	3.0 s
	Time to accelerate from 0 to the **[Rated motor freq.]** (Fr5) page 84. To have repeatability in ramps, the value of this parameter must be set according to the possibility of the application. See **[Acceleration]** (ACC) page 167.		
dEC	**[Deceleration]**	0.00 to 6,000 s (1)	3.0 s
	Time to decelerate from the **[Rated motor freq.]** (Fr5) page 84 to 0. To have repeatability in ramps, the value of this parameter must be set according to the possibility of the application. See **[Deceleration]** (dEC) page 167.		
AC2 ★	**[Acceleration 2]**	0.00 to 6,000 s (1)	5 s
	Time to accelerate from 0 to the **[Rated motor freq.]** (Fr5) page 84. To have repeatability in ramps, the value of this parameter must be set according to the possibility of the application. See **[Acceleration 2]** (AC2) page 168.		
dE2 ★	**[Deceleration 2]**	0.00 to 6,000 s (1)	5 s
	Time to decelerate from the **[Rated motor freq.]** (Fr5) page 84 to 0. To have repeatability in ramps, the value of this parameter must be set according to the possibility of the application. See **[Deceleration 2]** (dE2) page 168.		
tA1 ★	**[Begin Acc round]**	0 to 100%	10%
	Rounding of start of acceleration ramp as a % of the **[Acceleration]** (ACC) or **[Acceleration 2]** (AC2) ramp time. Visible if **[Ramp type]** (rPt) is set to **[Customized]** (CUS). See **[Begin Acc round]** (tA1) page 167.		
tA2 ★	**[End Acc round]**	0 to 100%	10%
	Rounding of end of acceleration ramp as a % of the **[Acceleration]** (ACC) or **[Acceleration 2]** (AC2) ramp time. Can be set between 0 and 100% - **[Begin Acc round]** (tA1). Visible if **[Ramp type]** (rPt) is set to **[Customized]** (CUS). See **[End Acc round]** (tA2) page 168.		
tA3 ★	**[Begin Dec round]**	0 to 100%	10%
	Rounding of start of deceleration ramp as a % of the **[Deceleration]** (dEC) or **[Deceleration 2]** (dE2) ramp time. Visible if **[Ramp type]** (rPt) is set to **[Customized]** (CUS). See **[Begin Dec round]** (tA3) page 168.		
tA4 ★	**[End Dec round]**	0 to 100%	10%
	Rounding of end of deceleration ramp as a % of the **[Deceleration]** (dEC) or **[Deceleration 2]** (dE2) ramp time. Can be set between 0 and 100% - **[Begin Dec round]** (tA3). Visible if **[Ramp type]** (rPt) is set to **[Customized]** (CUS). See **[End Dec round]** (tA4) page 168.		
LSP	**[Low speed]**	0 to 599 Hz	0 Hz
	Motor frequency at minimum reference, can be set between 0 and **[High speed]** (HSP) page 85. See **[Low speed]** (LSP) page 85.		
HSP	**[High speed]**	0 to 599 Hz	50 Hz
	Motor frequency at maximum reference, can be set between **[Low speed]** (LSP) and **[Max frequency]** (tFr). The factory setting changes to 60 Hz if **[Standard mot. freq]** (bFr) is set to **[60Hz NEMA]** (60). See **[High speed]** (HSP) page 85.		

Parameters described in this page can be accessed by: DRI- > CONF > FULL > SET-

Code	Name / Description	Adjustment range	Factory setting
HSP2 ★	**[High speed 2]**	0 to 599 Hz	50 Hz
	Visible if **[2 High speed]** (SH2) is not set to **[No]** (nO). See **[High speed 2]** (HSP2) page 241.		
HSP3 ★	**[High speed 3]**	0 to 599 Hz	50 Hz
	Visible if **[4 High speed]** (SH4) is not set to **[No]** (nO). See **[High speed 3]** (HSP3) page 241.		
HSP4 ★	**[High speed 4]**	0 to 599 Hz	50 Hz
	Visible if **[4 High speed]** (SH4) is not set to **[No]** (nO). See **[High speed 4]** (HSP4) page 241.		
ItH	**[Mot. therm. current]**	0.2 to 1.5 In (2)	According to drive rating
	Motor thermal protection current, to be set to the rated current indicated on the motor nameplate. See **[Mot. therm. current]** (ItH)page 85.		
UFr	**[IR compensation]**	0 to 200%	100%
	IR compensation. See **[IR comprensation]** (UFr) page 115.		
SLP ★	**[Slip compensation]**	0 to 300%	100%
	Slip compensation. See **[Slip compensation]** (SLP) page 115.		
SFC ★	**[K speed loop filter]**	0 to 100	65
	Speed filter coefficient. See **[K speed loop filter]** (SFC) page 115.		
SItE ★	**[Speed time integral]**	1 to 65,535 ms	63 ms
	Speed loop integral time constant. See **[Speed time integral]** (SItE) page 115.		
SPG ★	**[Speed prop. gain]**	0 to 1,000%	40%
	Speed loop proportional gain. See **[Speed prop. gain]** (SPG) page 115.		
SPGU ★	**[UF inertia comp.]**	0 to 1,000%	40%
	Inertia factor. See **[UF inertia comp.]** (SPGU) page 115.		

(1) Range 0.01 to 99.99 s or 0.1 to 999.9 s or 1 to 6,000 s according to **[Ramp increment]** (Inr) page 167.
(2) In corresponds to the rated drive current indicated in the Installation manual or on the drive nameplate.

★ These parameters only appear if the corresponding function has been selected in another menu. When the parameters can also be accessed and adjusted from within the configuration menu for the corresponding function, their description is detailed in these menus, on the pages indicated, to aid programming.

Parameter that can be modified during operation or when stopped.

Parameter settings for [K speed loop filter] (SFC), [Speed prop. gain] (SPG) and [Speed time integral] (SIt)

⚠ WARNING

LOSS OF CONTROL
Bad parameter settings of the speed loop with High Inertia application may cause a Ramp non consistent with application.
Failure to follow these instructions will result in death, serious injury, or equipment damage.

The following parameters can be accessed if **[Motor control type]** (Ctt) page 102 is set to **[SVC V]** (UUC), **[Sync. mot.]** (SYn) or **[Energy Sav.]** (nLd).

General Case: Setting for [K speed loop filter] (SFC) = 0

The regulator is an "IP" type with filtering of the speed reference, for applications requiring flexibility and stability (hoisting or high inertia, for example).

- **[Speed prop. gain]** (SPG) affects excessive speed.
- **[Speed time integral]** (SIt) affects the passband and response time.

Initial response	**Reduction in SIT** ↘	**Reduction in SIT** ↘↘
Reference division 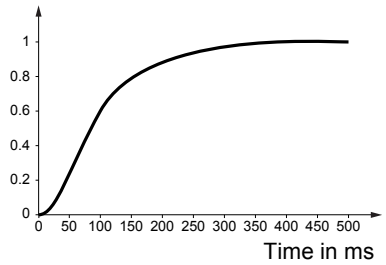	Reference division 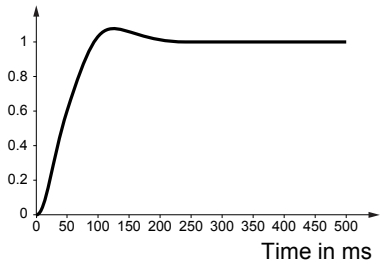	Reference division 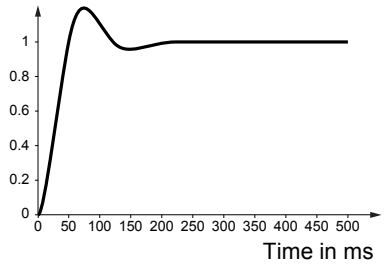
Initial response	**Increase in SPG** ↗	**Increase in SPG** ↗↗
Reference division 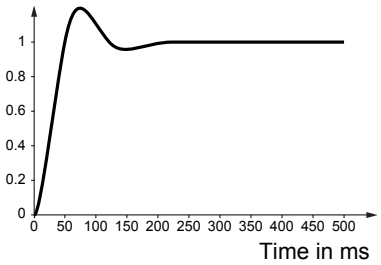	Reference division 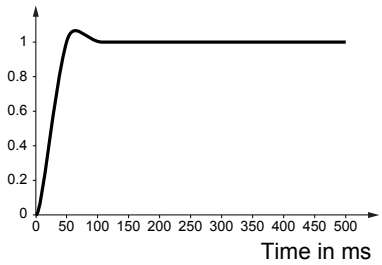	Reference division 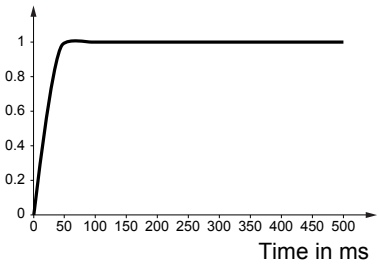

Special case: Parameter [K speed loop filter] (SFC) is not 0

This parameter must be reserved for specific applications that require a short response time (trajectory positioning or servo control).

- When set to 100 as described above, the regulator is a “PI” type, without filtering of the speed reference.
- Settings between 0 and 100 will obtain an intermediate function between the settings below and those on the previous page.

Example: Setting for **[K speed loop filter]** (SFC) = 100

- **[Speed prop. gain]** (SPG) affects the passband and response time.
- **[Speed time integral]** (SIt) affects excessive speed.

Initial response	**Reduction in SIT** ↘	**Reduction in SIT** ↘↘
Reference division 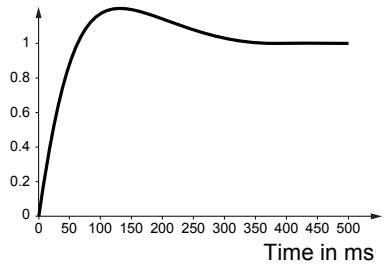	Reference division 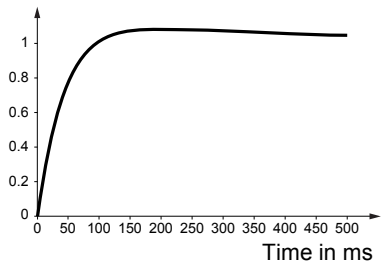	Reference division 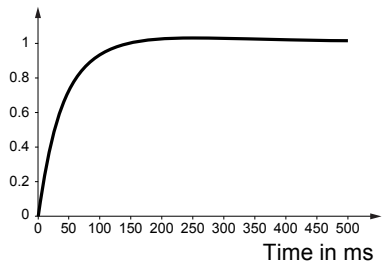
Initial response	**Increase in SPG** ↗	**Increase in SPG** ↗↗
Reference division 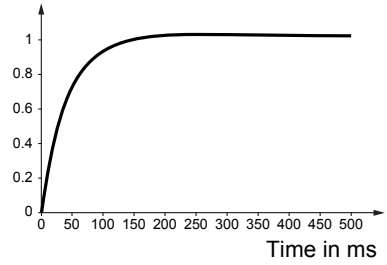	Reference division 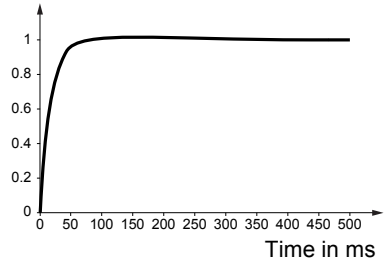	Reference division 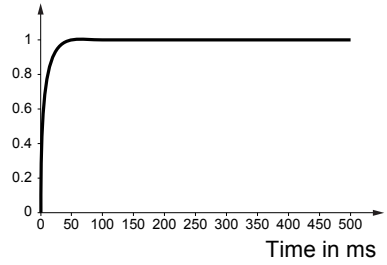

Parameters described in this page can be accessed by: DRI- > CONF > FULL > SET-

Code	Name / Description	Adjustment range	Factory setting
dCF ★	**[Ramp divider]** Deceleration ramp time reduction. See **[Ramp divider]** (dCF) page 170.	0 to 10	4
IdC ★	**[DC inject. level 1]** Level of DC injection braking current activated via logic input or selected as stop mode. See **[DC inject. level 1]** (IdC) page 171.	0.1 to 1.41 In (1)	0.64 In (1)
td1 ★	**[DC injection time 1]** Maximum current injection time **[DC inject. level 1]** (IdC). After this time, the injection current becomes **[DC inject. level 2]** (IdC2). See **[DC injection time 1]** (td1) page 171.	0.1 to 30 s	0.5 s
IdC2 ★	**[DC inject. level 2]** Injection current activated by logic input or selected as stop mode, once period of time **[DC injection time 1]** (td1) has elapsed. See **[DC inject. level 2]** (IdC2) page 172.	0.1 In to 1.41 In (1)	0.5 In (1)
tdC ★	**[DC injection time 2]** Maximum injection time **[DC inject. level 2]** (IdC2) for injection selected as stop mode only. See **[DC injection time 2]** (tdC) page 172.	0.1 to 30 s	0.5 s
SdC1 ★	**[Auto DC inj. level 1]** **CAUTION** **RISK OF DAMAGE TO THE MOTOR** Check that the motor will withstand this current without overheating. **Failure to follow these instructions can result in equipment damage.** Level of standstill DC injection current **[Auto DC injection]** (AdC) is not **[No]** (nO). See page 173.	0 to 1.2 In (1)	0.7 In (1)
tdC1 ★	**[Auto DC inj. time 1]** **CAUTION** **RISK OF DAMAGE TO THE MOTOR** • Long periods of DC injection braking can cause overheating and damage the motor. • Protect the motor by avoiding long periods of DC injection braking. **Failure to follow these instructions can result in equipment damage.** Standstill injection time. This parameter can be accessed if **[Auto DC injection]** (AdC) is not set to **[No]** (nO). If **[Motor control type]** (Ctt) page 102 is set to **[Sync. mot.]**(SYn), this time corresponds to the zero speed maintenance time. See page 173.	0.1 to 30 s	0.5 s

Parameters described in this page can be accessed by: DRI- > CONF > FULL > SET-

Code	Name / Description	Adjustment range	Factory setting
SdC2	**[Auto DC inj. level 2]**	0 to 1.2 In (1)	0.5 In (1)

★

CAUTION

RISK OF DAMAGE TO THE MOTOR
Check that the motor will withstand this current without overheating.
Failure to follow these instructions can result in equipment damage.

2nd level of standstill DC injection current.
This parameter can be accessed if **[Auto DC injection]** (AdC) is not **[No]** (nO).
See page 174.

Code	Name / Description	Adjustment range	Factory setting
tdC2	**[Auto DC inj. time 2]**	0 to 30 s	0 s

★

CAUTION

RISK OF DAMAGE TO THE MOTOR
• Long periods of DC injection braking can cause overheating and damage the motor.
• Protect the motor by avoiding long periods of DC injection braking.
Failure to follow these instructions can result in equipment damage.

2nd standstill injection time.
This parameter can be accessed if **[Auto DC injection]** (AdC) is set to **[Yes]** (YES).
See page 174.

Code	Name / Description	Adjustment range	Factory setting
SFr	**[Switching freq.]**	2 to 16 kHz	4.0 kHz

CAUTION

RISK OF DAMAGE TO THE DRIVE
On ATV32●●●●M2 ratings, if the RFI filters are disconnected (operation on an IT system), the drive's switching frequency must not exceed 4 kHz.
Failure to follow these instructions can result in equipment damage.

Switching frequency setting. See page 116.
Adjustment range: The maximum value is limited to 4 kHz if **[Motor surge limit]** (SUL) parameter, page 117 is configured.
Note: In the event of excessive temperature rise, the drive will automatically reduce the switching frequency and reset it once the temperature returns to normal.

Code	Name / Description	Adjustment range	Factory setting
CLI	**[Current Limitation]**	0 to 1.5 In (1)	1.5 In (1)

★

CAUTION

RISK OF DAMAGE TO THE MOTOR AND THE DRIVE
• Check that the motor will withstand this current, particularly in the case of permanent magnet synchronous motors, which are susceptible to demagnetization.
• Check that the profile mission complies with the derating curve given in the installation manual.
Failure to follow these instructions can result in equipment damage.

Used to limit the motor current. See page 215.
Note: If the setting is less than 0.25 In, the drive may lock in **[Output Phase Loss]** (OPL) fault mode if this has been enabled (see page 253). If it is less than the no-load motor current, the motor cannot run.

Parameters described in this page can be accessed by: DRI- > CONF > FULL > SET-

Code	Name / Description	Adjustment range	Factory setting
CL2	**[I Limit. 2 value]**	0 to 1.5 In (1)	1.5 In (1)

CAUTION

RISK OF DAMAGE TO THE MOTOR AND THE DRIVE
• Check that the motor will withstand this current, particularly in the case of permanent magnet synchronous motors, which are susceptible to demagnetization.
• Check that the profile mission complies with the derating curve given in the installation manual.
Failure to follow these instructions can result in equipment damage.

See page 215.
Note: If the setting is less than 0.25 In, the drive may lock in **[Output Phase Loss]** (OPL) fault mode if this has been enabled (see page 253). If it is less than the no-load motor current, the motor cannot run.

FLU	**[Motor fluxing]**		**[No]** (FnO)

⚠ ⚠ DANGER

HAZARD OF ELECTRIC SHOCK, EXPLOSION OR ARC FLASH
When **[Motor fluxing]** (FLU) is set to **[Continuous]** (FCt), the drive automatically builds up flux.
Check this action will not endanger personnel or equipment in any way.
Failure to follow these instructions will result in death or serious injury.

2 s

CAUTION

RISK OF DAMAGE TO THE MOTOR
Check that the motor will withstand this current without overheating.
Failure to follow these instructions can result in equipment damage.

The parameter is visible if **[Motor control type]** (Ctt) page 102 is not set to **[Sync. mot.]** (SYn).
In order to obtain rapid high torque on startup, magnetic flux needs to already have been established in the motor.
In **[Continuous]** (FCt) mode, the drive automatically builds up flux when it is powered up.
In **[Not cont.]** (FnC) mode, fluxing occurs when the motor starts up.
The flux current is greater than **[Rated mot. current]** (nCr) when the flux is established and is then adjusted to the motor magnetizing current. See page 186.

FnC **[Not cont.]** (FnC): Non-continuous mode
FCt **[Continuous]** (FCt): Continuous mode. This option is not possible if **[Auto DC injection]** (AdC) page 173 is **[Yes]** (YES) or if **[Type of stop]** (Stt) page 170 is **[Freewheel]** (nSt).
FnO **[No]** (FnO): Function inactive. This option is not possible if **[Brake assignment]** (bLC) page 191 is not **[No]** (nO).

tLS	**[Low speed time out]**	0 to 999.9 s	0 s

Maximum operating time at **[Low speed]** (LSP) (see page 85).
Following operation at LSP for a defined period, a motor stop is requested automatically. The motor will restart if the reference is greater than LSP and if a run command is still present. See page 210.
Note: A value of 0 indicates an unlimited period of time.
Note: If **[Low speed time out]** (tLS) is not 0, **[Type of stop]** (Stt) page 170 is forced to **[Ramp stop]** (rMP) (only if a ramp stop can be configured).

JGF	**[Jog frequency]**	0 to 10 Hz	10 Hz

Reference in jog operation. See page 175.

JGt	**[Jog delay]**	0 to 2.0 s	0.5 s

Anti-repeat delay between 2 consecutive jog operations. See page 176.

Parameters described in this page can be accessed by: DRI- > CONF > FULL > SET-

Code	Name / Description	Adjustment range	Factory setting
SP2 ★	**[Preset speed 2]** Preset speed 2. See **[Preset speed 2]** (SP2) page 178.	0 to 599 Hz	10 Hz
SP3 ★	**[Preset speed 3]** Preset speed 3. See **[Preset speed 3]** (SP3) page 178.	0 to 599 Hz	15 Hz
SP4 ★	**[Preset speed 4]** Preset speed 4. See **[Preset speed 4]** (SP4) page 178.	0 to 599 Hz	20 Hz
SP5 ★	**[Preset speed 5]** Preset speed 5. See **[Preset speed 5]** (SP5) page 178.	0 to 599 Hz	25 Hz
SP6 ★	**[Preset speed 6]** Preset speed 6. See **[Preset speed 6]** (SP6) page 178.	0 to 599 Hz	30 Hz
SP7 ★	**[Preset speed 7]** Preset speed 7. See **[Preset speed 7]** (SP7) page 178.	0 to 599 Hz	35 Hz
SP8 ★	**[Preset speed 8]** Preset speed 8. See **[Preset speed 8]** (SP8) page 179.	0 to 599 Hz	40 Hz
SP9 ★	**[Preset speed 9]** Preset speed 9. See **[Preset speed 9]** (SP9) page 179.	0 to 599 Hz	45 Hz
SP10 ★	**[Preset speed 10]** Preset speed 10. See **[Preset speed 10]** (SP10) page 179.	0 to 599 Hz	50 Hz
SP11 ★	**[Preset speed 11]** Preset speed 11. See **[Preset speed 11]** (SP11) page 179.	0 to 599 Hz	55 Hz
SP12 ★	**[Preset speed 12]** Preset speed 12. See **[Preset speed 12]** (SP12) page 179.	0 to 599 Hz	60 Hz

Parameters described in this page can be accessed by: DRI- > CONF > FULL > SET-

Code	Name / Description	Adjustment range	Factory setting
SP13 ★	**[Preset speed 13]** Preset speed 13. See **[Preset speed 13]** (SP13) page 179.	0 to 599 Hz	70 Hz
SP14 ★	**[Preset speed 14]** Preset speed 14. See **[Preset speed 14]** (SP14) page 179.	0 to 599 Hz	80 Hz
SP15 ★	**[Preset speed 15]** Preset speed 15. See **[Preset speed 15]** (SP15) page 179.	0 to 599 Hz	90 Hz
SP16 ★	**[Preset speed 16]** Preset speed 16. See **[Preset speed 16]** (SP16) page 179.	0 to 599 Hz	100 Hz
MFr ★	**[Multiplying coeff.]** Multiplying coefficient, can be accessed if **[Multiplier ref.]** (MA2, MA3) page 166 has been assigned to the graphic display terminal. See page 44.	0 to 100%	100%
SrP ★	**[+/-Speed limitation]** Limitation of +/- speed variation. See page 184.	0 to 50%	10%

Parameters described in this page can be accessed by: DRI- > CONF > FULL > SET-

Code	Name / Description	Adjustment range	Factory setting
rPG ★	**[PID prop. gain]** Proportional gain. See page 208.	0.01 to 100	1
rIG ★	**[PID integral gain]** Integral gain. See page 208.	0.01 to 100	1
rdG ★	**[PID derivative gain]** Derivative gain. See page 208.	0.00 to 100	0
PrP ★	**[PID ramp]** PID acceleration/deceleration ramp, defined to go from **[Min PID reference]** (PIP1) to **[Max PID reference]** (PIP2) and vice versa. See page 208.	0 to 99.9 s	0 s
POL ★	**[Min PID output]** Minimum value of regulator output in Hz. See page 208.	-599 to 599 Hz	0 Hz
POH ★	**[Max PID output]** Maximum value of regulator output in Hz. See page 208.	0 to 599 Hz	60 Hz
PAL ★	**[Min fbk alarm]** Minimum monitoring threshold for regulator feedback. See page 208.	See page 208 (2)	100
PAH ★	**[Max fbk alarm]** Maximum monitoring threshold for regulator feedback. See page 209.	See page 209 (2)	1,000
PEr ★	**[PID error Alarm]** Regulator error monitoring threshold. See page 209.	0 to 65,535 (2)	100
PSr ★	**[Speed input %]** Multiplying coefficient for predictive speed input. See page 209.	1 to 100%	100%
rP2 ★	**[Preset ref. PID 2]** Preset PID reference. See page 211.	See page 211 (2)	300

Parameters described in this page can be accessed by: DRI- > CONF > FULL > SET-

Code	Name / Description	Adjustment range	Factory setting
rP3 ★	**[Preset ref. PID 3]** Preset PID reference. See page 211.	See page 211 (2)	600
rP4 ★	**[Preset ref. PID 4]** Preset PID reference. See page 211.	See page 211 (2)	900

Parameters described in this page can be accessed by: DRI- > CONF > FULL > SET-

Code	Name / Description	Adjustment range	Factory setting
lbr ★	**[Brake release I FW]** Brake release current threshold for lifting or forward movement. See page 191.	0 to 1.36 In (1)	0.0 A
lrd ★	**[Brake release I Rev]** Brake release current threshold for lowering or reverse movement. See page 191.	0 to 1.36 In (1)	0.0 A
brt ★	**[Brake Release time]** Brake release time delay. See page 191.	0 to 5.00 s	0 s
b lr ★ AUtO	**[Brake release freq]** See page 192. **[Auto]** (AUtO): Nominal value	**[Auto]** (AUtO) 0 to 10 Hz	**[Auto]** (AUtO)
bEn ★	**[Brake engage freq]** Brake engage frequency threshold. See page 192.	**[Auto]** (AUtO) 0 to 10 Hz	**[Auto]** (AUtO)
tbE ★	**[Brake engage delay]** **⚠ WARNING** **LOSS OF CONTROL** Modify the Brake engage delay for horizontal movement only otherwise the control of the load can be lost. **Failure to follow these instructions can result in death, serious injury, or equipment damage.** Time delay before request to engage brake. See page 192.	0 to 5.00 s	0 s
bEt ★	**[Brake engage time]** Brake engage time (brake response time). See page 192.	0 to 5.00 s	0 s
JdC ★ AUtO	**[Jump at reversal]** See page 193. **[Auto]** (AUtO): Nominal value	**[Auto]** (AUtO) 0 to 10 Hz	**[Auto]** (AUtO)
ttr ★	**[Time to restart]** Time between the end of a brake engage sequence and the start of a brake release sequence. See page 193.	0.00 to 15.00 s	0.00 s

Parameters described in this page can be accessed by: DRI- > CONF > FULL > SET-

Code	Name / Description	Adjustment range	Factory setting
tLIM ★	**[Motoring torque lim]** Torque limitation in motor mode, as a % or in 0.1% increments of the rated torque in accordance with the **[Torque increment]** (IntP) parameter, page 213. See page 213.	0 to 300%	100%
tLIG ★	**[Gen. torque lim]** Torque limitation in generator mode, as a % or in 0.1% increments of the rated torque in accordance with the **[Torque increment]** (IntP) parameter, page 213. See page 213.	0 to 300%	100%
trH ★	**[Traverse freq. high]** Traverse high. See page 239.	0 to 10 Hz	4 Hz
trL ★	**[Traverse freq. low]** Traverse low. See page 239.	0 to 10 Hz	4 Hz
qSH ★	**[Quick step High]** Quick step high. See page 239.	0 to **[Traverse freq. high]** (trH)	0 Hz
qSL ★	**[Quick step Low]** Quick step low. See page 239.	0 to **[Traverse freq. low]** (trL	0 Hz
Ctd	**[Current threshold]** Current threshold for **[I attained]** (CtA) function assigned to a relay or a logic output (see page 135). See page 249.	0 to 1.5 In (1)	In (1)
ttH	**[High torque thd.]** High torque threshold for **[High tq. att.]** (ttHA) function assigned to a relay or a logic output (see page 135), as a % of the rated motor torque. See page 249.	-300% to +300%	100%
ttL	**[Low torque thd.]** Low torque threshold for **[Low tq. att.]** (ttLA) function assigned to a relay or a logic output (see page 135), as a % of the rated motor torque. See page 249.	-300% to +300%	50%
FqL ★	**[Pulse warning thd.]** Speed threshold measured by the **[FREQUENCY METER]** (FqF-) function, page 263, assigned to a relay or a logic output (see page 135). See page 250.	0 Hz to 20,000 kHz	0 Hz
Ftd	**[Freq. threshold]** Motor frequency threshold for **[Freq.Th.att.]** (FtA) function assigned to a relay or a logic output (see page 135), or used by the **[PARAM. SET SWITCHING]** (MLP-) function, page 227. See page 249.	0.0 to 599 Hz	HSP
F2d	**[Freq. threshold 2]** Motor frequency threshold for **[Freq. th.2 attained]** (F2A) function assigned to a relay or a logic output (see page 135), or used by the **[PARAM. SET SWITCHING]** (MLP-) function, page 227. See page 249.	0.0 to 599 Hz	HSP
FFt ★	**[Freewheel stop Thd]** Speed threshold below which the motor will switch to freewheel stop. This parameter supports switching from a ramp stop or a fast stop to a freewheel stop below a low speed threshold. It can be accessed if **[Type of stop]** (Stt) is set to **[Fast stop]** (FSt) or **[Ramp stop]** (rMP) and if **[Brake assignment]** (bLC) or **[Auto DC injection]** (AdC) are configured. See page 170.	0.2 to 599 Hz	0.2 Hz

Parameters described in this page can be accessed by: DRI- > CONF > FULL > SET-

Code	Name / Description	Adjustment range	Factory setting
ttd	**[Motor therm. level]** Trip threshold for motor thermal alarm (logic output or relay). See page 252.	0 to 118%	100%
JPF	**[Skip Frequency]** Skip frequency. This parameter helps to prevent prolonged operation within an adjustable range around the regulated frequency. This function can be used to help to prevent a speed, which would cause resonance, being reached. Setting the function to 0 renders it inactive. See page 179.	0 to 599 Hz	0 Hz
JF2	**[Skip Frequency 2]** 2nd skip frequency. This parameter helps to prevent prolonged operation within an adjustable range around the regulated frequency. This function can be used to help to prevent a speed, which would cause resonance, being reached. Setting the function to 0 renders it inactive. See page 180.	0 to 599 Hz	0 Hz
JF3	**[3rd Skip Frequency]** 3rd skip frequency. This parameter helps to prevent prolonged operation within an adjustable range around the regulated frequency. This function can be used to help to prevent a speed, which would cause resonance, being reached. Setting the function to 0 renders it inactive. See page 180.	0 to 599 Hz	0 Hz
JFH	**[Skip.Freq.Hysteresis]** Parameter visible if at least one skip frequency **[Skip Frequency]** (JPF), **[Skip Frequency 2]** (JF2) or **[3rd Skip Frequency]** (JF3) is different from 0. Skip frequency range: between (JPF – JFH) and (JPF + JFH) for example. This adjustment is common to the 3 frequencies (JPF, JF2, JF3). See page 180.	0.1 to 10 Hz	1 Hz
LUn	**[Unld.Thr.Nom.Speed]** Underload threshold at rated motor frequency (**[Rated motor freq.]** (FrS) page 84), as a % of the rated motor torque. Visible only if **[Unld T. Del. Detect]** (ULt) page 267 is not set to 0. See page 267.	20 to 100% of **[Rated mot. current]** (nCr)	60%
LUL	**[Unld.Thr.0.Speed]** Underload threshold at zero frequency, as a % of the rated motor torque. Visible only if **[Unld T. Del. Detect]** (ULt) page 267 is not set to 0. See page 267.	0 to **[Unld.Thr.Nom.Speed]** (LUn)	0%
rMUd	**[Unld. Freq.Thr. Det.]** Underload detection minimum frequency threshold. See page 267.	0 to 599 Hz	0 Hz
Srb	**[Hysteresis Freq.Att.]** Maximum deviation between the frequency reference and the motor frequency, which defines steady state operation. See page 267.	0.3 to 599 Hz	0.3 Hz
FtU	**[Underload T.B.Rest.]** Minimum time permitted between an underload being detected and any automatic restart. In order for an automatic restart to be possible, the value of **[Max. restart time]** (tAr) page 249 must exceed that of this parameter by at least one minute. See page 268.	0 to 6 min	0 min
LOC	**[Ovld Detection Thr.]** Overload detection threshold, as a % of the rated motor current **[Rated mot. current]** (nCr). This value must be less than the limit current in order for the function to work. See page 269. Visible only if **[Ovld Time Detect.]** (tOL) is not set to 0. This parameter is used to detect an "application overload". This is not a motor or drive thermal overload.	70% to 150% of **[Rated mot. current]** (nCr)	110%
FtO	**[Overload T.B.Rest.]** Minimum time permitted between an overload being detected and any automatic restart. In order for an automatic restart to be possible, the value of **[Max. restart time]** (tAr) page 249 must exceed that of this parameter by at least one minute. See page 269.	0 to 6 min	0 min

Parameters described in this page can be accessed by: DRI- > CONF > FULL > SET-

Code	Name / Description	Adjustment range	Factory setting
LbC ★	**[Load correction]** Rated correction in Hz. See **[Load correction]** (LbC) page 119.	0 to 599 Hz	0 Hz
FFM	**[Fan Mode]**		**[Standard]** (Std)
	CAUTION **RISK OF EQUIPMENT DAMAGE** If **[Fan Mode]** (FFM) is set to **[Never]** (StP), the fan of the drive will not be active. Life time of Electronic component will be reduced. Check that the ambient temperature will be limited to 40°C. **Failure to follow these instructions can result in equipment damage.**		
Std	**[Standard]** (Std): The fan starts and stops automatically according to the drive thermal state		
rUn	**[Always]** (rUn): The fan is started		
StP	**[Never]** (StP): The fan is stopped		
SdS	**[Scale factor display]** Used to display a value in proportion to the output frequency [Output frequency] (rFr): the machine speed, the motor speed, etc. The display will show [Cust. output value] (SPd3) = $\frac{\text{[Scale factor display] (SdS)} \times \text{[Output frequency] (rFr)}}{1000}$ to 2 decimal places • If [Scale factor display] (SdS) ⩽ 1, [Cust. output value] (SPd1) is displayed (possible definition = 0.01) • If 1 < [Scale factor display] (SdS) ⩽ 10, [Cust. output value] (SPd2) is displayed (possible definition = 0.1) • If [Scale factor display] (SdS) > 10, [Cust. output value] (SPd3) is displayed (possible definition = 1) • If [Scale factor display] (SdS) > 10 and [Scale factor display] (SdS) x [Output frequency] (rFr) > 9,999: example: for 24,223, display will show 24.22 - If [Scale factor display] (SdS) > 10 and [Scale factor display] (SdS) x [Output frequency] (rFr) > 65,535, display locked at 65.54 Example: Display motor speed for 4-pole motor, 1,500 rpm at 50 Hz (synchronous speed): [Scale factor display] (SdS) = 30 [Cust. output value] (SPd3) = 1,500 at [Output frequency] (rFr) = 50 Hz	0.1 to 200	30

(1) In corresponds to the rated drive current indicated in the Installation manual or on the drive nameplate.

(2) If a graphic display terminal is not in use, values greater than 9,999 will be displayed on the 4-digit display with a period mark after the thousand digit, example: 15.65 for 15,650.

★ These parameters only appear if the corresponding function has been selected in another menu. When the parameters can also be accessed and adjusted from within the configuration menu for the corresponding function, their description is detailed in these menus, on the pages indicated, to aid programming.

Parameter that can be modified during operation or when stopped.

2 s To change the assignment of this parameter, press the ENT key for 2 s.

Parameters described in this page can be accessed by: DRI- > CONF > FULL > DRC-

Motor control

The parameters in the **[MOTOR CONTROL]** (drC-) menu can only be modified when the drive is stopped and no run command is present, with the following exceptions:

- **[Auto tuning]** (tUn) page 110, which may cause the motor to start up.
- Parameters containing the sign ( ) in the code column, which can be modified with the drive running or stopped.

Note : We recommend to perform auto-tuning if one of the following parameters are modified from their factory setting.

Code	Name / Description	Adjustment range	Factory setting
FULL	**[FULL] (continued)**		
drC-	**[MOTOR CONTROL]**		
bFr	**[Standard mot. freq]** This parameter modifies the presets of the following parameters: **[High speed]** (HSP) page 85, **[Freq. threshold]** (Ftd) page 99, **[Rated motor volt.]** (UnS), **[Rated motor freq.]** (FrS) and **[Max frequency]** (tFr). 50 **[50 Hz IEC]** (50): IEC 60 **[60 Hz NEMA]** (60): NEMA		**[50 Hz IEC]** (50)
tFr	**[Max frequency]** The factory setting is 60 Hz, or preset to 72 Hz if **[Standard mot. freq]** (bFr) is set to 60 Hz. The maximum value is limited by the following conditions: It must not exceed 10 times the value of **[Rated motor freq.]** (FrS).	10 to 599 Hz	60 Hz
Ctt	**[Motor control type]** **Note:** Select law before entering parameter values. UUC **[SVC V]** (UUC): Sensorless vector control with internal speed loop based on voltage feedback calculation. For applications needing high performance during starting or operation. Std **[Standard]** (Std): Standard motor law. For simple applications that do not require high performance. Simple motor control law keeping a constant Voltage Frequency ratio, with a possible adjustment of the curve bottom. This law is generally used for motors connected in parallel. Some specific applications with motors in parallel and high performance levels may require **[SVC V]** (UUC). 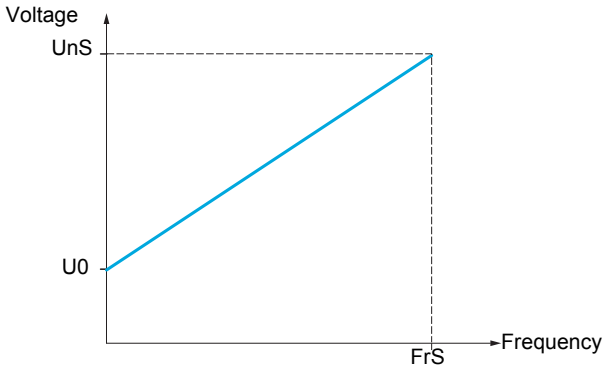 **Note:** U0 is the result of an internal calculation based on motor parameters and multiplied by UFr (%). U0 can be adjusted by modifying UFr value.		**[Standard]** (Std)

Parameters described in this page can be accessed by: DRI- > CONF > FULL > DRC-

Code	Name / Description	Adjustment range	Factory setting
UFS	**[V/F 5pts]** (UFS): 5-segment V/F profile: As **[Standard]** (Std) profile but also supports the avoidance of resonance (saturation). 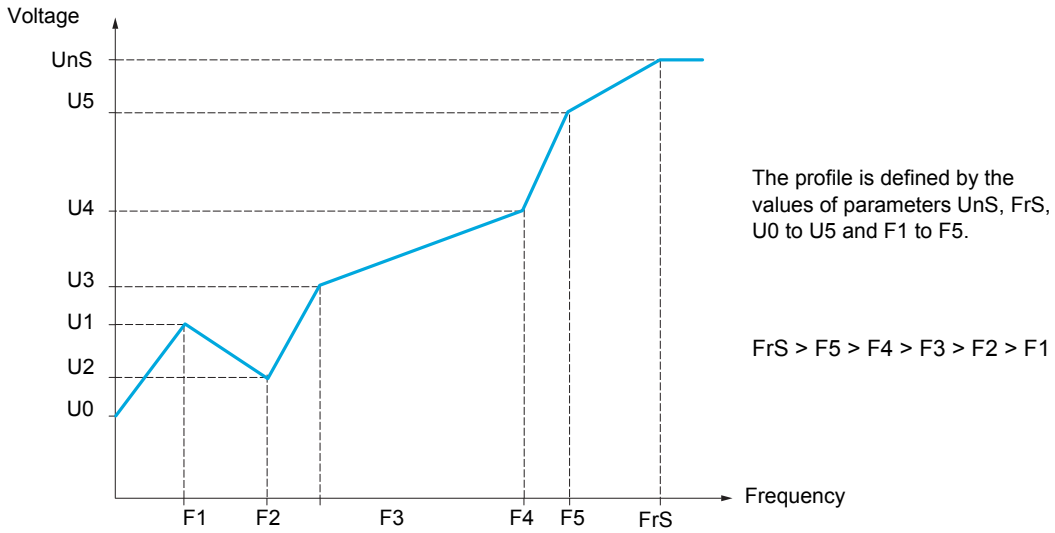 **Note:** U0 is the result of an internal calculation based on motor parameters and multiplied by UFr (%). U0 can be adjusted by modifying UFr value.		
Syn	**[Sync. mot.]** (Syn): For synchronous permanent magnet motors with sinusoidal electromotive force (EMF) only. This selection makes the asynchronous motor parameters inaccessible, and the synchronous motor parameters accessible.		
UFq	**[V/F Quad.]** (UFq): Variable torque. For pump and fan applications.		
nLd	**[Energy Sav.]** (nLd): Energy saving. For applications that do not require high dynamics.		

Parameters described in this page can be accessed by: DRI- > CONF > FULL > DRC- > ASY-

Asynchronous motor parameters

Code	Name / Description	Adjustment range	Factory setting
ASY-	**[ASYNC. MOTOR]** Only visible if **[Motor control type]** (CTT) page 102 is not set to **[Sync. mot.]** (SYN).		
nPr ★	**[Rated motor power]** This parameter cannot be accessed if **[Motor control type]** (CTT) page 102 is set to **[Sync. mot.]** (SYN). Rated motor power given on the nameplate, in kW if **[Standard mot. freq]** (bFr) is set to **[50Hz IEC]** (50), in HP if **[Standard mot. freq]** (bFr) is set to **[60Hz NEMA]** (60).	According to drive rating	According to drive rating
COS ★	**[Motor 1 Cosinus Phi]** Nominal motor cos phi. This parameter can be accessed if **[Motor param choice]** (MPC) is set to **[Mot Cos]** (COS).	0.5 to 1	According to drive rating
UnS ★	**[Rated motor volt.]** This parameter cannot be accessed if **[Motor control type]** (CTT) page 102 is set to **[Sync. mot.]** (SYN). Rated motor voltage given on the nameplate.	100 to 480 V	According to drive rating and **[Standard mot. freq]** (bFr)
nCr ★	**[Rated mot. current]** This parameter cannot be accessed if **[Motor control type]** (CTT) page 102 is set to **[Sync. mot.]** (SYN). Rated motor current given on the nameplate.	0.25 to 1.5 In (1)	According to drive rating and **[Standard mot. freq]** (bFr)
FrS ★	**[Rated motor freq.]** This parameter cannot be accessed if **[Motor control type]** (CTT) page 102 is set to **[Sync. mot.]** (SYN). Rated motor frequency given on the nameplate. The factory setting is 50 Hz, or preset to 60 Hz if **[Standard mot. freq]** (bFr) is set to 60 Hz.	10 to 800 Hz	50 Hz
nSP ★	**[Rated motor speed]** This parameter cannot be accessed if **[Motor control type]** (CTT) page 102 is set to **[Sync. mot.]** (SYN). 0 to 9,999 rpm then 10.00 to 65.53 krpm on the integrated display terminal. If, rather than the rated speed, the nameplate indicates the synchronous speed and the slip in Hz or as a %, calculate the rated speed as follows: Nominal speed = Synchronous speed x $\frac{100 - \text{slip as a \%}}{100}$ or Nominal speed = Synchronous speed x $\frac{50 - \text{slip in Hz}}{50}$ (50 Hz motors) or Nominal speed = Synchronous speed x $\frac{60 - \text{slip in Hz}}{60}$ (60 Hz motors).	0 to 65,535 rpm	According to drive rating

Parameters described in this page can be accessed by: DRI- > CONF > FULL > DRC- > ASY-

Code	Name / Description	Adjustment range	Factory setting
tUn	**[Auto tuning]**		**[No]** (nO)

⚠⚠DANGER

HAZARD OF ELECTRIC SHOCK OR ARC FLASH
- During auto-tuning, the motor operates at rated current.
- Do not service the motor during auto-tuning.

Failure to follow these instructions will result in death or serious injury.

⚠WARNING

LOSS OF CONTROL
- It is essential that the following parameters **[Rated motor volt.]** (UnS), **[Rated motor freq.]** (FrS), **[Rated mot. current]** (nCr), **[Rated motor speed]** (nSP), and **[Rated motor power]** (nPr) or **[Motor 1 Cosinus Phi]** (COS) are correctly configured before starting auto-tuning.
- When one or more of these parameters have been changed after auto-tuning has been performed, **[Auto tuning]** (tUn) will return **[No action]** (nO) and the procedure will have to be repeated.

Failure to follow these instructions can result in death, serious injury, or equipment damage.

2 s

- Auto-tuning is only performed if no stop command has been activated. If a "freewheel stop" or "fast stop" function has been assigned to a logic input, this input must be set to 1 (active at 0).
- Auto-tuning takes priority over any run or prefluxing commands, which will be taken into account after the auto-tuning sequence.
- If auto-tuning detects a fault, the drive displays **[No action]** (nO) and, depending on the configuration of **[Autotune fault mgt]** (tnL) page 265, may switch to **[Auto-tuning]** (tnF) fault mode.
- Auto-tuning may last for 1 to 2 seconds. Do not interrupt the process. Wait for the display to change to **[No action]** (nO).

Note: Motor thermal state has a big influence on tune result. Make the tune with the motor stopped and cold.
To redo a tune of the motor, wait that it is completely stopped and cold. Set first **[Auto tuning]** (tUn) to **[Erase tune]** (CLr), then redo the motor tuning.
The use of the motor tuning without doing a **[Erase tune]** (CLr) first is used to get the thermal state estimation of the motor.
In any case, the motor has to be stopped before performing a tune operation.
Cable length has an influence on the Tune result. If the cabling is modified, it is necessary to redo the tune operation.

nO **[No action]** (nO): Auto-tuning not in progress
YES **[Do tune]** (YES): Auto-tuning is performed immediatly if possible, then the parameter automatically changes to **[No action]** (nO). If the drive state does not allow the tune operation immediately, the parameter changes to **[No]** (nO) and the operation must be done again.
CLr **[Erase tune]** (CLr): The motor parameters measured by the auto-tuning function are reseted. The default motor parameters values are used to control the motor. **[Auto tuning status]** (tUS) is set to **[Not done]** (tAb).

tUS	**[Auto tuning state]**		**[Not done]** (tAb)

(for information only, cannot be modified)
This parameter is not saved at drive power off. It shows the Autotuning status since last power on.

tAb **[Not done]** (tAb): Autotune is not done
PEnd **[Pending]** (PEnd): Autotune has been requested but not yet performed
PrOG **[In Progress]** (PrOG): Autotune is in progress
FAIL **[Failed]** (FAIL): Autotune has detected a fault
dOnE **[Done]** (dOnE): The motor parameters measured by the auto-tuning function are used to control the motor

StUn	**[Tune selection]**		**[Default]** (tAb)

(for information only, cannot be modified)
tAb **[Default]** (tAb): The default values are used to control the motor
MEAS **[Measure]** (MEAS): The values measured by the auto-tuning function are used to control the motor
CUS **[Custom]** (CUS): The values set manually are used to control the motor
Note: Tune of the motor will increase significantly the performances.

Parameters described in this page can be accessed by: DRI- > CONF > FULL > DRC- > ASY-

Code	Name / Description	Adjustment range	Factory setting
tUnU	**[Auto tuning usage]**		**[Therm Mot]** (tM)
	This parameter shows the way used to modify the motor parameters according to its estimated thermal state. nO **[No]** (nO): No thermal state estimation tM **[Therm Mot]** (tM): Statoric thermal state estimation based on nominal current and current consumed by the motor Ct **[Cold tun]** (Ct): Statoric thermal state estimation based on statoric resistance measured at the first cold tune and tune done at each power up		
AUt	**[Automatic autotune]**		**[No]** (nO)
	⚠⚠DANGER **HAZARD OF ELECTRIC SHOCK, EXPLOSION OR ARC FLASH** When **[Automatic autotune]** (AUt) is changed from **[No]** (nO), Autotune will be performed every time the power will be switched on. Check this action will not endanger personnel or equipment in any way. **Failure to follow these instructions will result in death or serious injury.** 2 s The motor must be stopped when switching on the drive. **[Automatic autotune]** (AUt) is forced to **[Yes]** (YES) if **[Auto tuning usage]** (tUnU) is set to **[Cold tun]** (Ct). The value of motor statoric resistance measured during the tune is used to estimate the thermal state of the motor at power up. nO **[No]** (nO): Function deactivated YES **[Yes]** (YES): A tune is automatically done at each power up		
FLU	**[Motor fluxing]**		**[No]** (FnO)
	⚠⚠DANGER **HAZARD OF ELECTRIC SHOCK, EXPLOSION OR ARC FLASH** When **[Motor fluxing]** (FLU) is set to **[Continuous]** (FCt), the drive automatically builds up flux. Check this action will not endanger personnel or equipment in any way. **Failure to follow these instructions will result in death or serious injury.** ★ (1) 2 s **CAUTION** **RISK OF DAMAGE TO THE MOTOR** Check that the motor will withstand this current without overheating. **Failure to follow these instructions can result in equipment damage.** If **[Motor control type]** (Ctt) page 102 is set to **[Sync. mot.]** (SYn), the factory setting is replaced by **[Not cont.]** (FnC). In order to obtain rapid high torque on startup, magnetic flux needs to already have been established in the motor. In **[Continuous]** (FCt) mode, the drive automatically builds up flux when it is powered up. In **[Not cont.]** (FnC) mode, fluxing occurs when the motor starts up. The flux current is greater than **[Rated mot. current]** (nCr) (configured rated motor current) when the flux is established and is then adjusted to the motor magnetizing current. FnC **[Not cont.]** (FnC): Non-continuous mode FCt **[Continuous]** (FCt): Continuous mode. This option is not possible if **[Auto DC injection]** (AdC) page 173 is **[Yes]** (YES) or if **[Type of stop]** (Stt) page 170 is **[Freewheel]** (nSt). FnO **[No]** (FnO): Function inactive. This option is not possible if **[Brake assignment]** (bLC) page 191 is not **[No]** (nO). If **[Motor control type]** (Ctt) page 102 is set to **[Sync. mot.]** (SYn), the **[Motor fluxing]** (FLU) parameter causes the alignment of the rotor and not the fluxing. If **[Brake assignment]** (bLC) page 191 is not **[No]** (nO), the **[Motor fluxing]** (FLU) parameter has no effect.		

Parameters described in this page can be accessed by: DRI- > CONF > FULL > DRC- > ASY-

Code	Name / Description	Adjustment range	Factory setting
MPC ★	**[Motor param choice]**		**[Mot Power]** (nPr)
nPr	**[Mot Power]** (nPr)		
COS	**[Mot Cos]** (COS)		

(1) In corresponds to the rated drive current indicated in the Installation manual and on the drive nameplate.

★ These parameters only appear if the corresponding function has been selected in another menu. When the parameters can also be accessed and adjusted from within the configuration menu for the corresponding function, their description is detailed in these menus, on the pages indicated, to aid programming.

Parameter that can be modified during operation or when stopped.

2 s To change the assignment of this parameter, press the ENT key for 2 s.

Parameters described in this page can be accessed by: DRI- > CONF > FULL > DRC- > ASY-

Asynchronous motor parameters: Expert mode

Code	Name / Description	Adjustment range	Factory setting
ASY-	**[ASYNC. MOTOR]**		
rSA ★ (1)	**[Cust stator resist.]** Cold state stator resistance (per winding), modifiable value. The factory setting is replaced by the result of the auto-tuning operation, if it has been performed.	0 to 65,535 mOhm	0 mOhm
LFA ★	**[Lfw]** Cold state leakage inductance, modifiable value. The factory setting is replaced by the result of the auto-tuning operation, if it has been performed.	0 to 655.35 mH	0 mH
IdA ★	**[Idw]** Customer adjusted magnetizing current. The factory setting is replaced by the result of the auto-tuning operation, if it has been performed.	0 to 6,553.5 A	0 A
trA ★	**[Cust. rotor t const.]** Customer adjusted rotor time constant. The factory setting is replaced by the result of the auto-tuning operation, if it has been performed.	0 to 65,535 ms	0 ms

(1) On the integrated display unit: 0 to 9,999 then 10.00 to 65.53 (10,000 to 65,535).

★ These parameters only appear if the corresponding function has been selected in another menu. When the parameters can also be accessed and adjusted from within the configuration menu for the corresponding function, their description is detailed in these menus, on the pages indicated, to aid programming.

Parameters described in this page can be accessed by: DRI- > CONF > FULL > DRC- > SYN-

Synchronous motor parameters

These parameters can be accessed if **[Motor control type]** (CtT) page 102 is set to **[Sync. mot.]** (SYn). In this case, the asynchronous motor parameters cannot be accessed.

Once the drive is chosen:

1- Enter the motor nameplate.

2 - Perform the tune.

- Do an [Auto tuning] (tUn)
- Check the state of the synchronous motor saliency (See page 110.)

If [Saliency mot. state] (SMOt) displays [Med salient] (MLS) or [High salient] (HLS)
- follow the procedure below "**3 - Improve the tune result**"
  and
- follow the the procedure below "**4 - Adjust PHS**"

Or if [Saliency mot. state] (SMOt) displays [Low salient] (LLS)
- follow the the procedure below "**4 - Adjust PHS**"

3 - Improve the tune results.

CAUTION
RISK OF DAMAGE TO THE MOTOR AND THE DRIVE • Check that the motor will withstand this current, particularly in the case of permanent magnet synchronous motors, which are susceptible to demagnetization. • Check that the profile mission complies with the derating curve given in the installation manual. **Failure to follow these instructions can result in equipment damage.**

- Set [PSI align curr. max] (MCr) conforming to the maximum motor current. The maximum value of [PSI align curr. max] (MCr)) is limited by [Current Limitation] (CL1). Without information set [PSI align curr. max] (MCr) to [Auto] (AUtO) (see page 113)
- Do a second (tUn) after the (MCr) modification.

4 - Adjust PHS.

Adjust [Syn. EMF constant] (PHS) to have optimal behavior (See page 113.)
- Start the motor at minimal stable frequency available on the machine (without load).
- Check and note the [% error EMF sync] (rdAE) value. (See page 114)
  - If the [% error EMF sync] (rdAE) value is lower than 0%, then [Syn. EMF constant] (PHS) may be increased.
  - If the [% error EMF sync] (rdAE) value is upper than 0%, then [Syn. EMF constant] (PHS) may be reduced.

[% error EMF sync] (rdAE) value should be closed to 0%.
- Stop the motor for modify PHS in accordance with the value of the rdAE (previously noted).

Advices:

The drive must be chosen to have enough current according to the need of behavior, but not too much, to have enough accuracy in the current measurement, especially with the high frequency signal injection (see **[HF inj. activation]** (HF1) page 113).

Performances may be higher on high saliency motors by activating high frequency injection function (see **[HF inj. activation]** (HF1) page 113).

Parameters described in this page can be accessed by: DRI- > CONF > FULL > DRC- > SYN-

Code	Name / Description	Adjustment range	Factory setting
drC-	**[MOTOR CONTROL] (continued)**		
SYN-	**[SYNCHRONOUS MOTOR]**		
nCrS ★	**[Nominal I sync.]** Rated synchronous motor current given on the nameplate.	0.25 to 1.5 In (1)	According to drive rating
PPnS ★	**[Pole pairs]** Number of pairs of poles on the synchronous motor.	1 to 50	According to drive rating
nSPS ★ (2)	**[Nom motor spdsync]** Rated motor speed given on the nameplate.	0 to 48,000 rpm	According to drive rating
tqS ★	**[Motor torque]** Rated motor torque given on the nameplate.	0.1 to 6,553.5 Nm	According to drive rating
tUn	**[Auto tuning]**		**[No]** (nO)

⚠⚠DANGER

HAZARD OF ELECTRIC SHOCK OR ARC FLASH
- During auto-tuning, the motor operates at rated current.
- Do not service the motor during auto-tuning.

Failure to follow these instructions will result in death or serious injury.

⚠WARNING

LOSS OF CONTROL
- It is essential that the following parameters **[Nominal I sync.]** (nCrS), **[Nom motor spdsync]** (nSPS), **[Pole pairs]** (PPnS), **[Syn. EMF constant]** (PHS), **[Autotune L d-axis]** (LdS) and **[Autotune L q-axis]** (LqS) are correctly configured before starting auto-tuning.
- When one or more of these parameters have been changed after auto-tuning has been performed, **[Auto tuning]** (tUn) will return **[No action]** (nO) and the procedure will have to be repeated.

Failure to follow these instructions can result in death, serious injury, or equipment damage.

2 s

- Auto-tuning is only performed if no stop command has been activated. If a "freewheel stop" or "fast stop" function has been assigned to a logic input, this input must be set to 1 (active at 0).
- Auto-tuning takes priority over any run or prefluxing commands, which will be taken into account after the auto-tuning sequence.
- If auto-tuning detects a fault, the drive displays **[No action]** (nO) and, depending on the configuration of **[Autotune fault mgt]** (tnL) page 265, may switch to **[Auto-tuning]** (tnF) fault mode.
- Auto-tuning may last for 1 to 2 seconds. Do not interrupt the process. Wait for the display to change to **[No action]** (nO).

Note: Motor thermal state has a big influence on tune result. Make the tune with the motor stopped and cold.
To redo a tune of the motor, wait that it is completely stopped and cold. Set first **[Auto tuning]** (tUn) to **[Erase tune]** (CLr), then redo the motor tuning.
The use of the motor tuning without doing a **[Erase tune]** (CLr) first is used to get the thermal state estimation of the motor.
In any case, the motor has to be stopped before performing a tune operation.
Cable length has an influence on the Tune result. If the cabling is modified, it is necessary to redo the tune operation.

nO **[No action]** (nO): Auto-tuning not in progress
YES **[Do tune]** (YES): Auto-tuning is performed immediatly if possible, then the parameter automatically changes to **[No action]** (nO). If the drive state does not allow the tune operation immediately, the parameter changes to **[No]** (nO) and the operation must be done again.
CLr **[Erase tune]** (CLr): The motor parameters measured by the auto-tuning function are reseted. The default motor parameters values are used to control the motor. **[Auto tuning status]** (tUS) is set to **[Not done]** (tAb).

Parameters described in this page can be accessed by: DRI- > CONF > FULL > DRC- > SYN-

Code	Name / Description	Adjustment range	Factory setting
tUS	**[Auto tuning state]** (for information only, cannot be modified) This parameter is not saved at drive power off. It shows the Autotuning status since last power on. tAb **[Not done]** (tAb): Autotune is not done PEnd **[Pending]** (PEnd): Autotune has been requested but not yet performed PrOG **[In Progress]** (PrOG): Autotune is in progress FAIL **[Failed]** (FAIL): Autotune has detected a fault dOnE **[Done]** (dOnE): The motor parameters measured by the auto-tuning function are used to control the motor		**[Not done]** (tAb)
StUn	**[Tune selection]** (for information only, cannot be modified) **Note:** Tune of the motor will increase significantly the performances. tAb **[Default]** (tAb): The default values are used to control the motor MEAS **[Measure]** (MEAS): The values measured by the auto-tuning function are used to control the motor CUS **[Custom]** (CUS): The values set manually are used to control the motor		**[Default]** (tAb)
tUnU	**[Auto tuning usage]** This parameter shows the way used to modify the motor parameters according to its estimated thermal state. nO **[No]** (nO): No thermal state estimation tM **[Therm Mot]** (tM): Statoric thermal state estimation based on nominal current and current consumed by the motor Ct **[Cold tun]** (Ct): Statoric thermal state estimation based on statoric resistance measured at the first cold tune and tune done at each power up		**[Therm Mot]** (tM)
AUt 2 s	**[Automatic autotune]** **⚠⚠DANGER** **HAZARD OF ELECTRIC SHOCK, EXPLOSION OR ARC FLASH** When **[Automatic autotune]** (AUt) is changed from **[No]** (nO), Autotune will be performed every time the power will be switched on. Check this action will not endanger personnel or equipment in any way. **Failure to follow these instructions will result in death or serious injury.** The motor must be stopped when switching on the drive. **[Automatic autotune]** (AUt) is forced to **[Yes]** (YES) if **[Auto tuning usage]** (tUnU) is set to **[Cold tun]** (Ct). The value of motor statoric resistance measured during the tune is used to estimate the thermal state of the motor at power up. nO **[No]** (nO): Function deactivated YES **[Yes]** (YES): A tune is automatically done at each power up		**[No]** (nO)
SMOt ★	**[Saliency mot. state]** (for information only, cannot be modified) Information on synchronous motor saliency. This parameter can be accessed if **[Tune selection]** (StUM) is set to **[Measure]** (MEAS). **Note:** In case of motor with low saliency, the standard control law is advised. nO **[No]** (nO): Tune not done LLS **[Low salient]** (LLS): Low saliency level (Recommended configuration: **[Angle setting type]** (ASt) = **[PSI align]** (PSI) or **[PSIO align]** (PSIO) and **[HF inj. activation]** (HFI) = **[No]** (nO)). MLS **[Med salient]** (MLS): Medium saliency level (**[Angle setting type]** (ASt) = **[SPM align]** (SPMA) is possible. **[HF inj. activation]** (HFI) = **[Yes]** (YES) could work). HLS **[High salient]** (HLS): High saliency level (**[Angle setting type]** (ASt) = **[IPM align]** (IPMA) is possible. **[HF inj. activation]** (HFI) = **[Yes]** (YES) is possible).		

Parameters described in this page can be accessed by: DRI- > CONF > FULL > DRC- > SYN-

Code	Name / Description	Adjustment range	Factory setting
ASt ★	**[Angle setting type]** Mode for measuring the phase-shift angle. Visible only if **[Motor control type]** (Ctt) is set to **[Sync. mot.]** (SYn). **[PSI align]** (PSI) and **[PSIO align]** (PSIO) are working for all type of synchronous motors. **[SPM align]** (SPMA) and **[IPM align]** (IPMA) increase performances depending on the type of synchronous motor.		**[PSIO align.]** (PSIO)
IPMA SPMA PSI PSIO nO	**[IPM align]** (IPMA): Alignment for IPM motor. Alignment mode for Interior-buried Permanent Magnet motor (usually, this kind of motor has a high saliency level). It uses high frequency injection, which is less noisy than standard alignment mode. **[SPM align]** (SPMA): Alignment for SPM motor. Mode for Surface-mounted Permanent Magnet motor (usually, this kind of motor has a medium or low saliency level). It uses high frequency injection, which is less noisy than standard alignment mode. **[PSI align]** (PSI): Pulse signal injection. Standard alignment mode by pulse signal injection. **[PSIO align]** (PSIO): Pulse signal injection - Optimized. Standard optimized alignment mode by pulse signal injection. The phase shift angle measurement time is re duced after the first run order or tune operation, even if the drive has been turned off. **[No align]** (nO): No alignment		
HFI ★	**[HF inj. activation]** Activation of high frequency signal injection in RUN. This function allows to estimate the motor speed in a view to have torque at low speed without speed feedback. **Note:** The more the saliency is high, the more the **[HF inj. activation]** (HFI) function will be efficient. In order to ensure the performances, it could be necessary to adjust the speed loop parameters (**[K speed loop filter]** (SFC), **[Speed time integral]** (SIt) and **[Speed prop. gain]** (SPG), see page 115) and the speed estimation phase locked loop (Expert parameters **[HF pll bandwith]** (SPb) and **[HF pll dump. factor]** (SPF), see page 113). High frequency injection is not efficient with low saliency motors (see **[Saliency mot. state]** (SMOt) page 111). It is advised to have 4 kHz of pwm frequency (**[Switching freq.]** (SFr)). In case of instability with no load, it is advised to decrease **[Speed prop. gain]** (SPG) and **[HF pll bandwith]** (SPb). Then, adjust the speed loop parameters to have the dynamic behavior and the PLL gains to have a good speed estimation at low speed. In case of instability with load, it could help to increase the **[Angle error Comp.]** (PEC) parameter (mainly for SPM motor).		**[No]** (nO)
nO YES	**[No]** (nO): Function deactivated **[Yes]** (YES): High frequency injection is used for speed estimation		

(1) In corresponds to the rated drive current indicated in the Installation manual and on the drive nameplate.
(2) On the integrated display unit: 0 to 9,999 then 10.00 to 65.53 (10,000 to 65,536).

★ These parameters only appear if the corresponding function has been selected in another menu. When the parameters can also be accessed and adjusted from within the configuration menu for the corresponding function, their description is detailed in these menus, on the pages indicated, to aid programming.

Parameter that can be modified during operation or when stopped.

2 s To change the assignment of this parameter, press the ENT key for 2 s.

Parameters described in this page can be accessed by: DRI- > CONF > FULL > DRC- > SYN-

Synchronous motor: Expert mode

Code	Name / Description	Adjustment range	Factory setting
SYN-	**[SYNCHRONOUS MOTOR]**		
rSAS ★ (1)	**[Cust. stator R syn]** Cold state stator resistance (per winding). The factory setting is replaced by the result of the auto-tuning operation, if it has been performed. The value can be entered by the user, if he knows it.	0 to 65,535 mOhm	0 mOhm
Ld5 ★	**[Autotune L d-axis]** Axis "d" stator inductance in mH (per phase). On motors with smooth poles **[Autotune L d-axis]** (Ld5) = **[Autotune L q-axis]** (Lq5) = Stator inductance L. The factory setting is replaced by the result of the auto-tuning operation, if it has been performed.	0 to 655.35 mH	0 mH
Lq5 ★	**[Autotune L q-axis]** Axis "q" stator inductance in mH (per phase). On motors with smooth poles **[Autotune L d-axis]** (Ld5) = **[Autotune L q-axis]** (Lq5) = Stator inductance L. The factory setting is replaced by the result of the auto-tuning operation, if it has been performed.	0 to 655.35 mH	0 mH
PHS ★ (1)	**[Syn. EMF constant]** Synchronous motor EMF constant, in mV per rpm (peak voltage per phase). PHS adjustment allows to reduce the current in operation without load.	0 to 6,553.5 mV/rpm	0 mV/rpm
FrSS ★	**[Nominal freq sync.]** Nominal motor frequency for synchronous motor in Hz unit. Automatically updated according to **[Nom motor spdsync]** (nSPS) and **[Pole pairs]** (PPnS) data.	10 to 800 Hz	nSPS * PPnS / 60
SPb ★	**[HF pll bandwith]** Bandwidth of the stator frequency Pll.	0 to 100 Hz	25 Hz
SPF ★	**[HF pll dump. factor]** Dumping factor of the stator frequency Pll.	0 to 200%	100%
PEC ★ AUtO	**[Angle error Comp.]** Error compensation of the angle position in high frequency mode. It increases performances at low speed in generator and motor mode, particularly for SPM motors. **[Auto]** (AUtO): The drive takes a value equal to the rated slip of the motor, calculated using the drive parameters.	0 to 500%	0%
Fr I ★	**[HF injection freq.]** Frequency of the high frequency injection signal. It has an influence on the noise during angle shift measurement and speed estimation accuracy.	250 to 1,000 Hz	500 Hz
HIr ★	**[HF current level]** Ratio for the current level of the high frequency injection signal. It has an influence on the noise during angle shift measurement and speed estimation accuracy.	0 to 200%	25%
MCr ★	**[PSI align curr. max]** Current level in % of **[Nominal I sync.]** (nCrS) for **[PSI align]** (PSI) and **[PSIO align]** (PSIO) angle shift measurement modes. This parameter has an impact on the inductor measurement. **[PSI align curr. max]** (MCr) is used for tune operation. This current must be equal or higher than the maximum current level of the application, otherwise instability may occur. If **[PSI align curr. max]** (MCr) is set to **[Auto]** (AUtO), **[PSI align curr. max]** (MCr) = 150% of **[Nominal I sync.]** (nCrS) during the tune operation and 100% of **[Nominal I sync.]** (nCrS) during angle shift measurement in case of standard alignment (**[PSI align]** (PSI) or **[PSIO align]** (PSIO)).	**[Auto]** (AUtO) to 300%	**[Auto]** (AUtO)
ILr ★	**[Injection level align]** Current level in % of **[Nominal I sync.]** (nCrS) for high frequency phase-shift angle measurement IPMA type.	0 to 200%	50%

Parameters described in this page can be accessed by: DRI- > CONF > FULL > DRC- > SYN-

Code	Name / Description	Adjustment range	Factory setting
S I r ★	**[Boost level align.]** Current level in % of **[Nominal I sync.]** (n C r S) for high frequency phase-shift angle measurement SPMA type.	0 to 200%	100%
r d A E	**[% error EMF sync]** Ratio D-Axis Current Use r d A E to asjust **[Syn. EMF constant]** (P H S), r d A E should be closed to 0. If the [% error EMF sync] (r d A E) value is lower than 0%, then **[Syn. EMF constant]** (P H S), may be increased. If the [% error EMF sync] (r d A E) value is upper than 0%, then **[Syn. EMF constant]** (P H S), may be reduced.	-3276.7 to 3275.8 %	-

(1) On the integrated display unit: 0 to 9,999 then 10.00 to 65.53 (10,000 to 65,536).

★ These parameters only appear if the corresponding function has been selected in another menu. When the parameters can also be accessed and adjusted from within the configuration menu for the corresponding function, their description is detailed in these menus, on the pages indicated, to aid programming.

Parameter that can be modified during operation or when stopped.

Parameters described in this page can be accessed by: DRI- > CONF > FULL > DRC-

Code	Name / Description	Adjustment range	Factory setting
drC-	**[MOTOR CONTROL] (continued)**		
SPG ★	**[Speed prop. gain]** Speed loop proportional gain. Visible if **[Motor control type]** (Ctt) is not set to **[Standard]** (Std), **[V/F 5pts]** (UF5) or **[V/F Quad.]** (UF9).	0 to 1,000%	40%
SPGU ★	**[UF inertia comp.]** Inertia factor for following motor control laws. Visible if **[Motor control type]** (Ctt) is set to **[Standard]** (Std), **[V/F 5pts]** (UF5) or **[V/F Quad.]** (UF9).	0 to 1,000%	40%
SIt ★	**[Speed time integral]** Speed loop integral time constant. Visible if **[Motor control type]** (Ctt) is not set to **[Standard]** (Std), **[V/F 5pts]** (UF5) or **[V/F Quad.]** (UF9).	1 to 65,535 ms	63 ms
SFC ★	**[K speed loop filter]** Speed filter coefficient (0(IP) to 100(PI)).	0 to 100	65
FFH ★	**[Spd est. filter time]** Accessible in Expert mode only. Frequency to filter the estimated speed.	0 to 100 ms	6.4 ms
CrtF ★	**[Cur. ref. filter time]** Accessible in Expert mode only. Filter time of the current reference filter [of control law (if **[No]** (nO): stator natural frequency)].	0 to 100 ms	3.2 ms
UFr	**[IR compensation]** Used to optimize torque at very low speed, or to adapt to special cases (for example: for motors connected in parallel, decrease **[IR compensation]** (UFr)). If there is insufficient torque at low speed, increase **[IR compensation]** (UFr). A too high value can avoid the motor to start (locking) or change the current limiting mode.	0 to 200%	100%
SLP ★	**[Slip compensation]** This parameter cannot be accessed if **[Motor control type]** (Ctt) is set to **[Sync. mot.]** (SYn). This parameter is written at 0% when **[Motor control type]** (Ctt) is set to **[V/F Quad.]** (UF9). Adjusts the slip compensation around the value set by the rated motor speed. The speeds given on motor nameplates are not necessarily exact. If slip setting is lower than actual slip: The motor is not rotating at the correct speed in steady state, but at a speed lower than the reference. If slip setting is higher than actual slip: The motor is overcompensated and the speed is unstable.	0 to 300%	100%
U1 ★	**[U1]** V/F profile setting. This parameter can be accessed if **[Motor control type]** (Ctt) is set to **[V/F 5pts]** (UF5).	0 to 800 V according to rating	0 V
F1 ★	**[F1]** V/F profile setting. This parameter can be accessed if **[Motor control type]** (Ctt) is set to **[V/F 5pts]** (UF5).	0 to 599 Hz	0 Hz
U2 ★	**[U2]** V/F profile setting. This parameter can be accessed if **[Motor control type]** (Ctt) is set to **[V/F 5pts]** (UF5).	0 to 800 V according to rating	0 V
F2 ★	**[F2]** V/F profile setting. This parameter can be accessed if **[Motor control type]** (Ctt) is set to **[V/F 5pts]** (UF5).	0 to 599 Hz	0 Hz

Parameters described in this page can be accessed by: DRI- > CONF > FULL > DRC-

Code	Name / Description	Adjustment range	Factory setting
U 3 ★	**[U3]** V/F profile setting. This parameter can be accessed if **[Motor control type]** (C t t) is set to **[V/F 5pts]** (U F 5).	0 to 800 V according to rating	0 V
F 3 ★	**[F3]** V/F profile setting. This parameter can be accessed if **[Motor control type]** (C t t) is set to **[V/F 5pts]** (U F 5).	0 to 599 Hz	0 Hz
U 4 ★	**[U4]** V/F profile setting. This parameter can be accessed if **[Motor control type]** (C t t) is set to **[V/F 5pts]** (U F 5).	0 to 800 V according to rating	0 V
F 4 ★	**[F4]** V/F profile setting. This parameter can be accessed if **[Motor control type]** (C t t) is set to **[V/F 5pts]** (U F 5).	0 to 599 Hz	0 Hz
U 5 ★	**[U5]** V/F profile setting. This parameter can be accessed if **[Motor control type]** (C t t) is set to **[V/F 5pts]** (U F 5).	0 to 800 V according to rating	0 V
F 5 ★	**[F5]** V/F profile setting. This parameter can be accessed if **[Motor control type]** (C t t) is set to **[V/F 5pts]** (U F 5).	0 to 599 Hz	0 Hz
C L I ★	**[Current Limitation]** **CAUTION** **RISK OF DAMAGE TO THE MOTOR AND THE DRIVE** • Check that the motor will withstand this current, particularly in the case of permanent magnet synchronous motors, which are susceptible to demagnetization. • Check that the profile mission complies with the derating curve given in the installation manual. **Failure to follow these instructions can result in equipment damage.** First current limitation. **Note:** If the setting is less than 0.25 In, the drive may lock in **[Output Phase Loss]** (O P L) fault mode if this has been enabled (see page 253). If it is less than the no-load motor current, the motor cannot run.	0 to 1.5 In (1)	1.5 In (1)
S F t	**[Switch. freq type]** The motor switching frequency will be modified (reduced) when the internal temperature of the drive will be too high. H F I **[SFR type 1]** (H F I): Heating optimization Allows the system to adapt the switching frequency according to the motor frequency. H F 2 **[SFR type 2]** (H F 2): Motor noise optimization (for high switching frequency) Allows the system to keep a constant chosen switching frequency **[Switching freq.]** (S F r) whatever the motor frequency **[Output frequency]** (r F r). In the event of overheating, the drive automatically decreases the switching frequency. It is restored to its original value when the temperature returns to normal.		**[SFR type 1]** (H F I)
S F r	**[Switching freq.]** **CAUTION** **RISK OF DAMAGE TO THE DRIVE** On ATV32●●●●M2 ratings, if the RFI filters are disconnected (operation on an IT system), the drive's switching frequency must not exceed 4 kHz. **Failure to follow these instructions can result in equipment damage.** Switching frequency setting. Adjustment range: The maximum value is limited to 4 kHz if **[Motor surge limit]** (S U L) parameter page 117 is configured. **Note:** In the event of excessive temperature rise, the drive will automatically reduce the switching frequency and reset it once the temperature returns to normal. In case of high speed motor, it is advised to increase the Pulse Width Modulation (PWM) frequency **[Switching freq.]** (S F r) at 8, 12 or 16 kHz.	2 to 16 kHz	4 kHz

Parameters described in this page can be accessed by: DRI- > CONF > FULL > DRC-

Code	Name / Description	Adjustment range	Factory setting
nrd	**[Noise reduction]** Random frequency modulation helps to prevent any resonance, which may occur at a fixed frequency. nO **[No]** (nO): Fixed frequency YES **[Yes]** (YES): Frequency with random modulation		**[No]** (nO)
bOA	**[Boost activation]** nO **[Inactive]** (nO): No boost dYnA **[Dynamic]** (dYnA): Dynamic boost StAt **[Static]** (StAt): Static boost		**[Dynamic]** (dYnA)
bOO ★	**[Boost]** This parameter can be accessed if **[Boost activation]** (bOA) is not set to **[No]** (nO). Adjustment of the motor magnetizing current at low speed, as a % of the rated magnetizing current. This parameter is used to increase or reduce the time taken to establish the torque. It allows gradual adjustment up to the frequency set by **[Action Boost]** (FAb). Negative values apply particularly to tapered rotor motors. 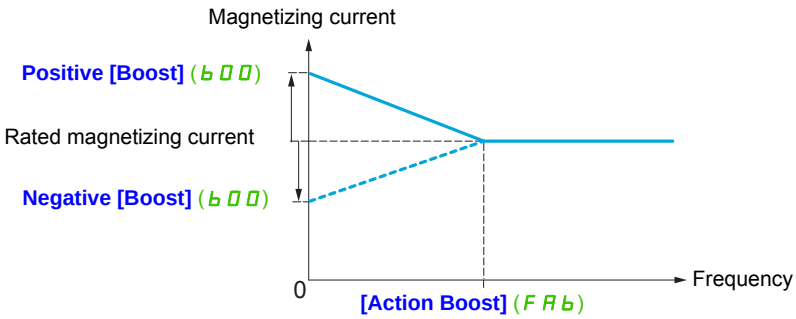 	-100 to 100%	0%
FAb ★	**[Action Boost]** This parameter can be accessed if **[Boost activation]** (bOA) is not set to **[No]** (nO). Frequency above which the magnetizing current is no longer affected by **[Boost]** (bOO).	0 to 599 Hz	0 Hz
SUL	**[Motor surge limit.]** This function limits motor overvoltages and is useful in the following applications: - NEMA motors - Japanese motors - Spindle motors - Rewound motors This parameter can remain set to **[No]** (nO) for 230/400 V motors used at 230 V, or if the length of cable between the drive and the motor does not exceed: - 4 m with unshielded cables - 10 m with shielded cables **Note:** When **[Motor surge limit.]** (SUL) is set to **[Yes]**(YES), the maximum switching frequency **[Switching freq.]** (SFr) is modified, see page 117. nO **[No]** (nO): Function inactive YES **[Yes]** (YES): Function active		**[No]** (nO)
SOP ★	**[Volt surge limit. opt]** Optimization parameter for transient overvoltages at the motor terminals. This parameter can be accessed if **[Motor surge limit.]** (SUL) is set to **[Yes]** (YES). 6 8 10 Set to 6, 8 or 10 µs, according to the following table. **Note:** This parameter is useful for ATV32●●●N4 drives.		10 µs

★ These parameters only appear if the corresponding function has been selected in another menu. When the parameters can also be accessed and adjusted from within the configuration menu for the corresponding function, their description is detailed in these menus, on the pages indicated, to aid programming.

Parameter that can be modified during operation or when stopped.

The value of the **[Volt surge limit. opt]** (SOP) parameter corresponds to the attenuation time of the cable used. It is defined to help to prevent the superimposition of voltage wave reflections resulting from long cable lengths. It limits overvoltages to twice the DC bus rated voltage.

The tables on the following page give examples of correspondence between the **[Volt surge limit. opt]** (SOP) parameter and the length of the cable between the drive and the motor. For longer cable lengths, an output of the filter or a dV/dt protection filter must be used.

For motors in parallel, the sum of all the cable lengths must be taken into consideration. Compare the length given in the table row corresponding to the power for one motor with that corresponding to the total power, and select the shorter length.

Example: Two 7.5 kW (10 HP) motors

Take the lengths on the 15 kW (20 HP) table row, which are shorter than those on the 7.5 kW (10 HP) row, and divide by the number of motors to obtain the length per motor (with unshielded "GORSE" cable and SOP = 6, the result is 40/2 = 20 m maximum for each 7.5 kW (10 HP) motor).

In special cases (for example, different types of cable, different motor powers in parallel, different cable lengths in parallel, etc.), we recommend using an oscilloscope to check the overvoltage values obtained at the motor terminals.

To retain the overall drive performance, do not increase the SOP value unnecessarily.

Tables giving the correspondence between the SOP parameter and the cable length, for 400 V line supply

Altivar 32	Motor		Cable cross-section (min)		Maximum cable length in meters								
Reference	Power				Unshielded "GORSE" cable Type H07 RN-F 4Gxx			Shielded "GORSE" cable Type GVCSTV-LS/LH			Shielded "BELDEN" cable Type 2950x		
	kW	HP	in mm²	AWG	SOP = 10	SOP = 8	SOP = 6	SOP = 10	SOP = 8	SOP = 6	SOP = 10	SOP = 8	SOP = 6
ATV32HO37N4	0.37	0.50	1.5	14	100 m	70 m	45 m	105 m	85 m	65 m	50 m	40 m	30 m
ATV32HO55N4	0.55	0.75	1.5	14	100 m	70 m	45 m	105 m	85 m	65 m	50 m	40 m	30 m
ATV32HO75N4	0.75	1	1.5	14	100 m	70 m	45 m	105 m	85 m	65 m	50 m	40 m	30 m
ATV32HU11N4	1.1	1.5	1.5	14	100 m	70 m	45 m	105 m	85 m	65 m	50 m	40 m	30 m
ATV32HU15N4	1.5	2	1.5	14	100 m	70 m	45 m	105 m	85 m	65 m	50 m	40 m	30 m
ATV32HU22N4	2.2	3	1.5	14	110 m	65 m	45 m	105 m	85 m	65 m	50 m	40 m	30 m
ATV32HU30N4	3	-	1.5	14	110 m	65 m	45 m	105 m	85 m	65 m	50 m	40 m	30 m
ATV32HU40N4	4	5	2.5	12	110 m	65 m	45 m	105 m	85 m	65 m	50 m	40 m	30 m
ATV32HU55N4	5.5	7.5	4	10	120 m	65 m	45 m	105 m	85 m	65m	50 m	40 m	30 m
ATV32HU75N4	7.5	10	6	8	120 m	65 m	45 m	105 m	85 m	65 m	50 m	40 m	30 m
ATV32HD11N4	11	15	10	8	115 m	60 m	45 m	100 m	75 m	55 m	50 m	40 m	30 m
ATV32HD15N4	15	20	16	6	105 m	60 m	40 m	100 m	70 m	50 m	50 m	40 m	30 m

For 230/400 V motors used at 230 V, the **[Motor surge limit.]** (SUL) parameter can remain set to **[No]** (nO).

Parameters described in this page can be accessed by: DRI- > CONF > FULL > DRC-

Code	Name / Description	Adjustment range	Factory setting
Ubr	**[Braking level]** Braking transistor command level.	335 to 820 V	According to drive rating voltage
LbA ★	**[Load sharing]** When 2 motors are connected mechanically and therefore at the same speed, and each is controlled by a drive, this function can be used to improve torque distribution between the two motors. To do this, it varies the speed based on the torque. This parameter can only be accessed if **[Motor control type]** (Ctt) page 102 is set to **[SVC V]** (UUC). nO **[No]** (nO): Function inactive YES **[Yes]** (YES): Function active		**[No]** (nO)
LbC ★	**[Load correction]** Rated correction in Hz. This parameter can be accessed if **[Load sharing]** (LbA) is set to **[Yes]** (YES). 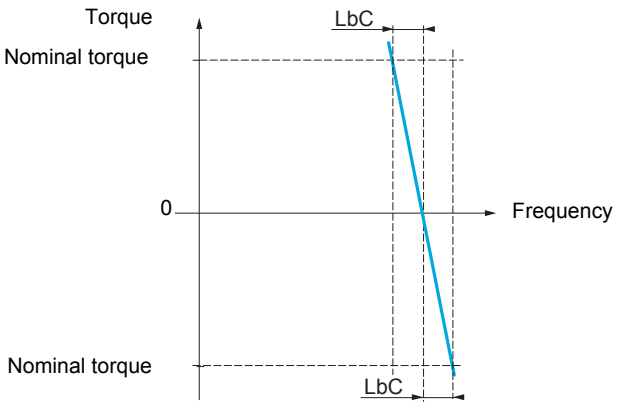	0 to 599 Hz	0 Hz

★ These parameters only appear if the corresponding function has been selected in another menu. When the parameters can also be accessed and adjusted from within the configuration menu for the corresponding function, their description is detailed in these menus, on the pages indicated, to aid programming.

Parameter that can be modified during operation or when stopped.

Load sharing, parameters that can be accessed at expert level

Principle:

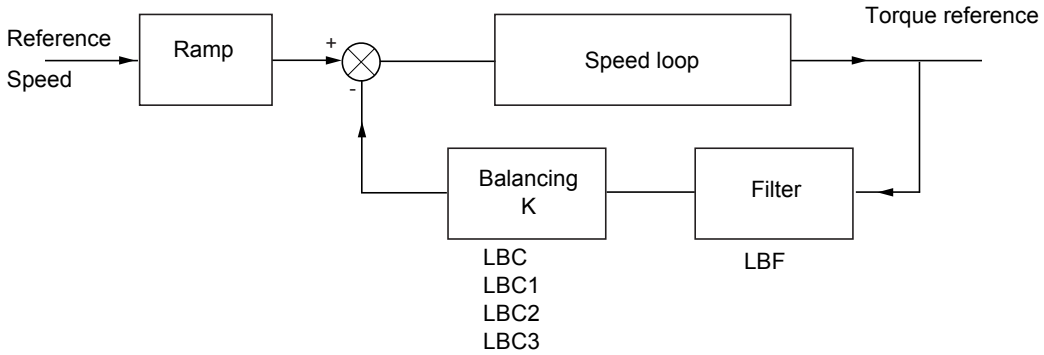

The load sharing factor K is determined by the torque and speed, with two factors K1 and K2 (K = K1 x K2).

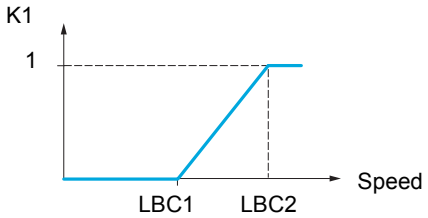

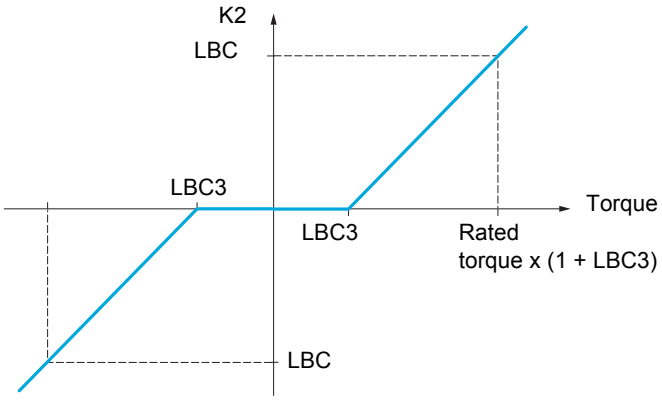

Parameters described in this page can be accessed by: DRI- > CONF > FULL > DRC-

Code	Name / Description	Adjustment range	Factory setting
LbC1 ★	**[Correction min spd]** This parameter can be accessed if **[Load sharing]** (LbA) is set to **[Yes]** (YES). Minimum speed for load correction in Hz. Below this threshold, no corrections are made. Used to cancel correction at very low speed if this would hamper rotation of the motor.	0 to 598.9 Hz	0 Hz
LbC2 ★	**[Correction max spd]** This parameter can be accessed if **[Load sharing]** (LbA) is set to **[Yes]** (YES). Speed threshold in Hz above which maximum load correction is applied.	**[Correction min spd]** (LbC1) + 0.1 at 599 Hz	0.1 Hz
LbC3 ★	**[Torque offset]** This parameter can be accessed if **[Load sharing]** (LbA) is set to **[Yes]** (YES). Minimum torque for load correction as a % of the rated torque. Below this threshold, no corrections are made. Used to avoid torque instabilities when the torque direction is not constant.	0 to 300%	0%
LbF ★	**[Sharing filter]** This parameter can be accessed if **[Load sharing]** (LbA) is set to **[Yes]** (YES). Time constant (filter) for correction in ms. Used in the event of flexible mechanical coupling in order to avoid instabilities.	0 to 20 s	100 ms

★ These parameters only appear if the corresponding function has been selected in another menu. When the parameters can also be accessed and adjusted from within the configuration menu for the corresponding function, their description is detailed in these menus, on the pages indicated, to aid programming.

Parameter that can be modified during operation or when stopped.

Parameters described in this page can be accessed by: DRI- > CONF > FULL > I_O-

Inputs / outputs CFG

The parameters in the **[INPUTS / OUTPUTS CFG]** (I _ O -) menu can only be modified when the drive is stopped and no run command is present.

Code	Name / Description	Adjustment range	Factory setting
F U L L	**[FULL] (continued)**		
I _ O -	**[INPUTS / OUTPUTS CFG]**		
t C C	**[2/3 wire control]**		**[2 wire]** (2 C)
2 s	**⚠ DANGER** **UNINTENDED EQUIPMENT OPERATION** When this parameter is changed, **[Reverse assign.]** (r r S) and **[2 wire type]** (t C t) parameters, and all the assignments involving the logic inputs will revert to their default values. Check that this change is compatible with the wiring diagram used. **Failure to follow these instructions will result in death or serious injury.**		
2 C	**[2 wire]** (2 C) **2-wire control (level commands):** This is the input state (0 or 1) or edge (0 to 1 or 1 to 0) which controls running or stopping. Example of "source" wiring: 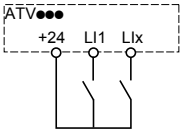 LI1: forward LIx: reverse		
3 C	**[3 wire]** (3 C) **3-wire control (pulse commands):** A "forward" or "reverse" pulse is sufficient to command starting, a "stop" pulse is sufficient to command stopping. Example of "source" wiring: 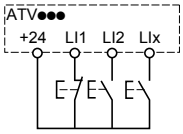 LI1: stop LI2: forward LIx: reverse		
t C t	**[2 wire type]**		**[Transition]** (t r n)
★ 2 s	**⚠ DANGER** **UNINTENDED EQUIPMENT OPERATION** Check that the modification of the 2 wire type controls is compatible with the wiring diagram used. **Failure to follow these instructions will result in death or serious injury.**		
L E L	**[Level]** (L E L): State 0 or 1 is taken into account for run (1) or stop (0)		
t r n	**[Transition]** (t r n): A change of state (transition or edge) is necessary to initiate operation, in order to avoid accidental restarts after a break in the power supply		
P F O	**[Fwd priority]** (P F O): State 0 or 1 is taken into account for run or stop, but the "forward" input takes priority over the "reverse" input		

Parameters described in this page can be accessed by: DRI- > CONF > FULL > I_O-

Code	Name / Description	Adjustment range	Factory setting
rUn ★	**[Drive Running]** Assignment of the stop command. Visible only if **[2/3 wire control]** (tCC) is set to **[3 wire]** (3C). LI1 **[LI1]** (LI1): Logical input LI1 if not in **[I/O profile]** (IO) Cd00 **[Cd00]** (Cd00): In **[I/O profile]** (IO), can be switched with possible logic inputs OL01 **[OL01]** (OL01): Function blocks: Logical Output 01 ... OL10 **[OL10]** (OL10): Function blocks: Logical Output 10		**[No]** (nO)
Frd	**[Forward]** Assignment of the forward direction command. LI1 **[LI1]** (LI1): Logical input LI1 if not in **[I/O profile]** (IO) Cd00 **[Cd00]** (Cd00): In **[I/O profile]** (IO), can be switched with possible logic inputs OL01 **[OL01]** (OL01): Function blocks: Logical Output 01 ... OL10 **[OL10]** (OL10): Function blocks: Logical Output 10		**[LI1]** (LI1)
rrS	**[Reverse assign.]** Assignment of the reverse direction command. nO **[No]** (nO): Not assigned LI1 **[LI1]** (LI1): Logical input LI1 ... **[...]** (...): See the assignment conditions on page 150		**[LI2]** (LI2)

Parameters described in this page can be accessed by: DRI- > CONF > FULL > I_O- > L1-

Code	Name / Description	Adjustment range	Factory setting
L I -	**[LI1 CONFIGURATION]**		
L IA	**[LI1 assignment]** Read-only parameter, cannot be configured. It displays all the functions that are assigned to input LI1 in order to check for multiple assignments.		
nO	**[No]** (nO): Not assigned		
rUn	**[Run]** (rUn): Run Enable		
Frd	**[Forward]** (Frd): Forward operation		
rrS	**[Reverse]** (rrS): Reverse operation		
rPS	**[Ramp switching]** (rPS): Ramp switching		
JOG	**[Jog]** (JOG): Jog operation		
USP	**[+Speed]** (USP): + speed		
dSP	**[- speed]** (dSP): - speed		
PS2	**[2 preset speeds]** (PS2): 2 Preset speeds		
PS4	**[4 preset speeds]** (PS4): 4 Preset speeds		
PS8	**[8 preset speeds]** (PS8): 8 Preset speeds		
rFC	**[Ref. 2 switching]** (rFC): Reference switching		
nSt	**[Freewheel stop]** (nSt): Freewheel stop		
dC I	**[DC injection]** (dC I): Injection DC stop		
FSt	**[Fast stop]** (FSt): Fast stop		
FLO	**[Forced local]** (FLO): Forced local mode		
rSF	**[Fault reset]** (rSF): Fault reset		
tUL	**[Auto-tuning]** (tUL): Auto-tuning		
SPM	**[Ref. memo.]** (SPM): Save reference		
FL I	**[Pre Fluxing]** (FL I): Motor fluxing		
PAU	**[Auto / manual]** (PAU): PI(D) auto-manu		
P IS	**[PID integral reset]** (P IS): Integral shunting PI(D)		
Pr2	**[2 preset PID ref.]** (Pr2): 2 Preset PI(D) references		
Pr4	**[4 preset PID ref.]** (Pr4): 4 Preset PI(D) references		
tLA	**[Torque limitation]** (tLA): Permanent torque limitation		
EtF	**[External fault]** (EtF): External fault		
rCA	**[Output contact. fdbk]** (rCA): Downstream contactor feedback		
CnF I	**[2 config. switching]** (CnF I): Configuration switching 1		
CnF2	**[3 config. switching]** (CnF2): Configuration switching 2		
CHA I	**[2 parameter sets]** (CHA I): Parameter switching 1		
CHA2	**[3 parameter sets]** (CHA2): Parameter switching 2		
tLC	**[Activ. Analog torque limitation]** (tLC): Torque limitation: Activation (analog input) by a logic input		
CCS	**[Cmd switching]** (CCS): Command channel switching		
InH	**[Fault inhibition]** (InH): Fault inhibition		
PS 16	**[16 preset speeds]** (PS 16): 16 preset speeds		
LC2	**[Current limit 2]** (LC2): Current limitation switching		
rCb	**[Ref 1B switching]** (rCb): Reference channel switching (1 to 1B)		
trC	**[Traverse control]** (trC): Traverse control		
bC I	**[Brake contact]** (bC I): Brake logic input contact		
SAF	**[Stop FW limit sw.]** (SAF): Stop switch forward		
SAr	**[Stop RV limit sw.]** (SAr): Stop switch reverse		
dAF	**[Slowdown forward]** (dAF): Slowdown attained forward		
dAr	**[Slowdown reverse]** (dAr): Slowdown attained reverse		
CLS	**[Disable limit sw.]** (CLS): Limits switches clearing		
LES	**[Drive lock (Line contact. ctrl)]** (LES): Emergency stop		
rtr	**[Init. traverse ctrl.]** (rtr): Reload traverse control		
SnC	**[Counter wobble]** (SnC): Counter wobble synchronization		
rPA	**[Prod. reset]** (rPA): Reset Product		
SH2	**[2 HSP]** (SH2): High Speed 2		
SH4	**[4 HSP]** (SH4): High Speed 4		
btUC	**[Bth visibilit.]** (btUC): Bluetooth visibility		
FPS I	**[Preset spd2]** (FPS I): Function key preset speed 1 assignment		
FPS2	**[Preset spd3]** (FPS2): Function key preset speed 2 assignment		
FPr I	**[PID ref. 2]** (FPr I): Function key preset PI 1 assignment		
FPr2	**[PID ref. 3]** (FPr2): Function key preset PI 2 assignment		
FUSP	**[+Speed]** (FUSP): Function key faster assignment		
FdSP	**[-Speed]** (FdSP): Function key slower assignment		
Ft	**[T/K]** (Ft): Function key bumpless assignment		
US I	**[+speed around ref.]** (US I): + Speed around ref		
dS I	**[-speed around ref.]** (dS I): - Speed around ref		

Parameters described in this page can be accessed by: DRI- > CONF > FULL > I_O- > L1-

Code	Name / Description	Adjustment range	Factory setting
USI dSI ILO1 ... IL10 FbrM SLS1 SLS2 SS11 SS12 StO1 StO2	**[+speed around ref.]** (USI): + Speed around ref **[-speed around ref.]** (dSI): - Speed around ref **[IL01]** (ILO1): Function blocks: Logical Input 1 **...** **[IL10]** (IL10): Function blocks: Logical Input 10 **[FB start]** (FbrM): Function blocks: Run mode **[SLS ch.1]** (SLS1): Safety: false consumer **[SLS ch.2]** (SLS2): Safety: false consumer **[SS1 ch.1]** (SS11): Safety: false consumer **[SS1 ch.2]** (SS12): Safety: false consumer **[STO ch.1]** (StO1): Safety: false consumer **[STO ch.2]** (StO2): Safety: false consumer		
LId	**[LI1 On Delay]** This parameter is used to take account of the change of the logic input to state 1 with a delay that can be adjusted between 0 and 200 milliseconds, in order to filter out possible interference. The change to state 0 is taken into account without delay.	0 to 200 ms	0 ms
I_O-	**[INPUTS / OUTPUTS CFG] (continued)**		
L2- to L6-	**[LIx CONFIGURATION]** All the logic inputs available on the drive are processed as in the example for LI1 above, up to LI6.		
L5-	**[LI5 CONFIGURATION]** Specific parameters for LI5 used as a pulse input.		
PIA	**[RP assignment]** Read-only parameter, cannot be configured. It displays all the functions associated with the Pulse input in order to check, for example, for compatibility problems. Identical to **[AI1 assignment]** (AI1A) page 130.		
PIL	**[RP min value]** Pulse input scaling parameter of 0% in Hz * 10 unit.	0 to 20.00 kHz	0 kHz
PFr	**[RP max value]** Pulse input scaling parameter of 100% in Hz * 10 unit.	0 to 20.00 kHz	20.00 kHz
PFI	**[RP filter]** I/O ext Pulse input cutoff time of the low-filter.	0 to 1,000 ms	0 ms
LA1- LA2-	**[LAx CONFIGURATION]** The 2 analog inputs AI1 and AI2 on the drive could be used as LI inputs and are processed as in the example for LI1 above.		

★ These parameters only appear if the corresponding function has been selected in another menu. When the parameters can also be accessed and adjusted from within the configuration menu for the corresponding function, their description is detailed in these menus, on the pages indicated, to aid programming.

2 s To change the assignment of this parameter, press the ENT key for 2 s.

Configuration of analog inputs and Pulse input

The minimum and maximum input values (in volts, mA, etc.) are converted to % in order to adapt the references to the application.

Minimum and maximum input values:

The minimum value corresponds to a reference of 0% and the maximum value to a reference of 100%. The minimum value may be greater than the maximum value:

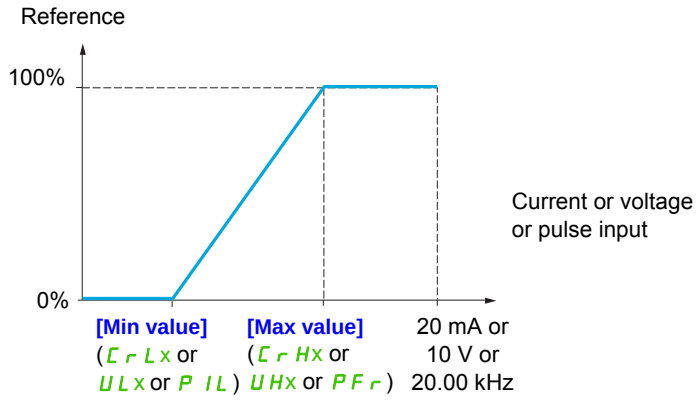

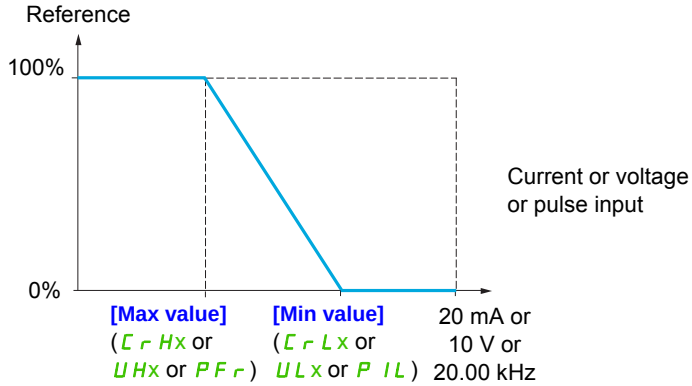

For +/- bidirectional inputs, the min. and max. are relative to the absolute value, for example +/- 2 to 8 V.

Range (output values): For analog inputs only:

This parameter is used to configure the reference range to [0% ➞100%] or [-100% ➞ +100%] in order to obtain a bidirectional output from a unidirectional input.

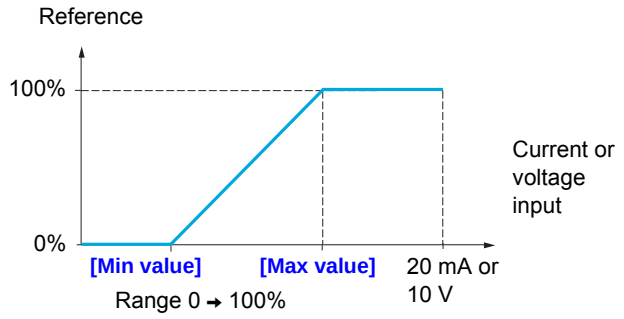

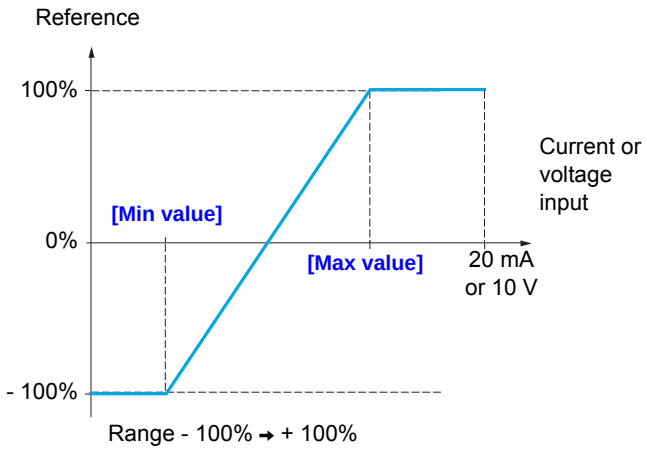

Parameters described in this page can be accessed by: DRI- > CONF > FULL > I_O-

Code	Name / Description	Adjustment range	Factory setting
I _ O -	**[INPUTS / OUTPUTS CFG] (continued)**		
b S P	**[Reference template]**		**[Standard]** (b S d)
b S d	**[Standard]** (b S d) 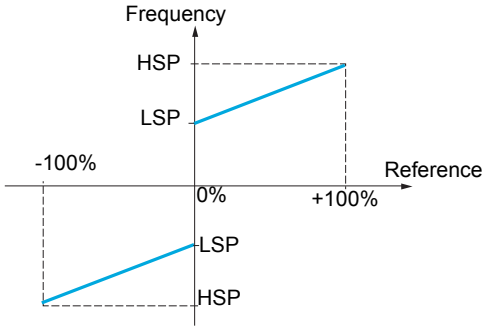 At zero reference the frequency = LSP		
b L S	**[Pedestal]** (b L S) 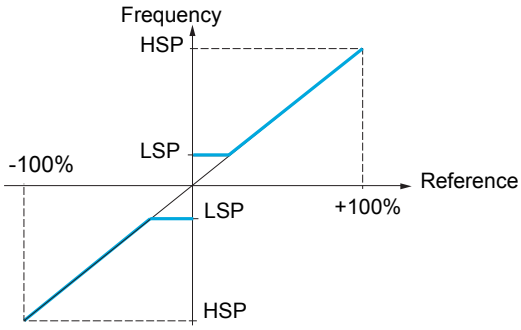 At reference = 0 to LSP the frequency = LSP		
b n S	**[Deadband]** (b n S) 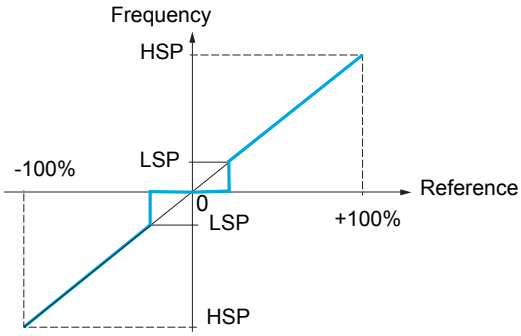 At reference = 0 to LSP the frequency = 0		
b n S 0	**[Deadband 0]** (b n S 0) 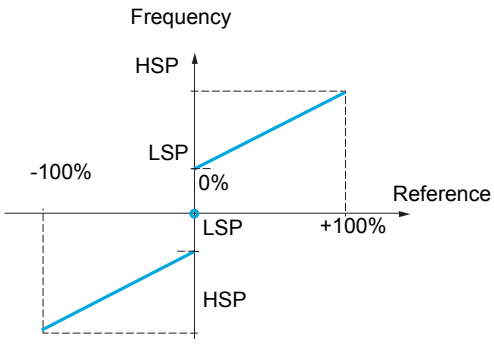 This operation is the same as **[Standard]** (b S d), except that in the following cases at zero reference, the frequency = 0: The signal is less than **[Min value]**, which is greater than 0 (example 1 V on a 2 - 10 V input) The signal is greater than **[Min value]**, which is greater than **[Max value]** (example: 11 V on a 10 - 0 V input). If the input range is configured as "bidirectional", operation remains identical to **[Standard]** (b S d). This parameter defines how the speed reference is taken into account, for analog inputs and Pulse input only. In the case of the PID regulator, this is the PID output reference. The limits are set by the **[Low speed]** (L S P) and **[High speed]** (H S P) parameters, page 85.		

Parameter that can be modified during operation or when stopped.

Delinearization: For analog inputs only:

The input can be delinearized by configuring an intermediate point on the input/output curve of this input:

For range 0 → 100%

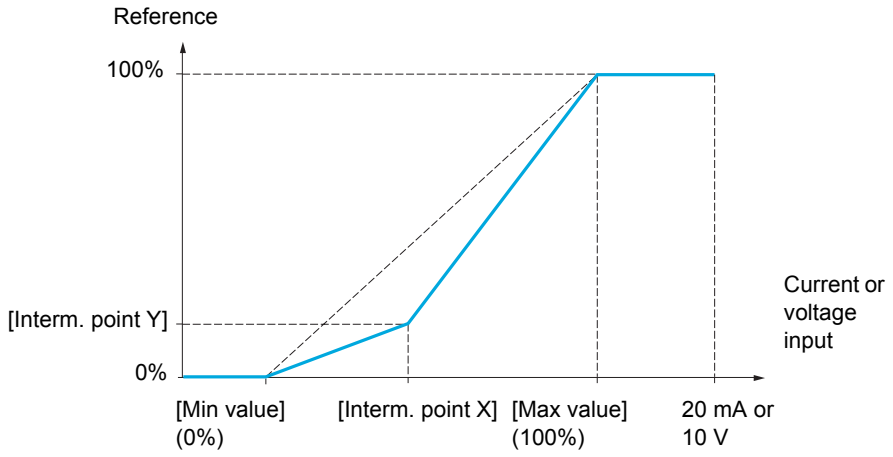

Note: For [Interm. point X], 0% corresponds to [Min value] and 100% to [Max value].

For range -100% → 100%

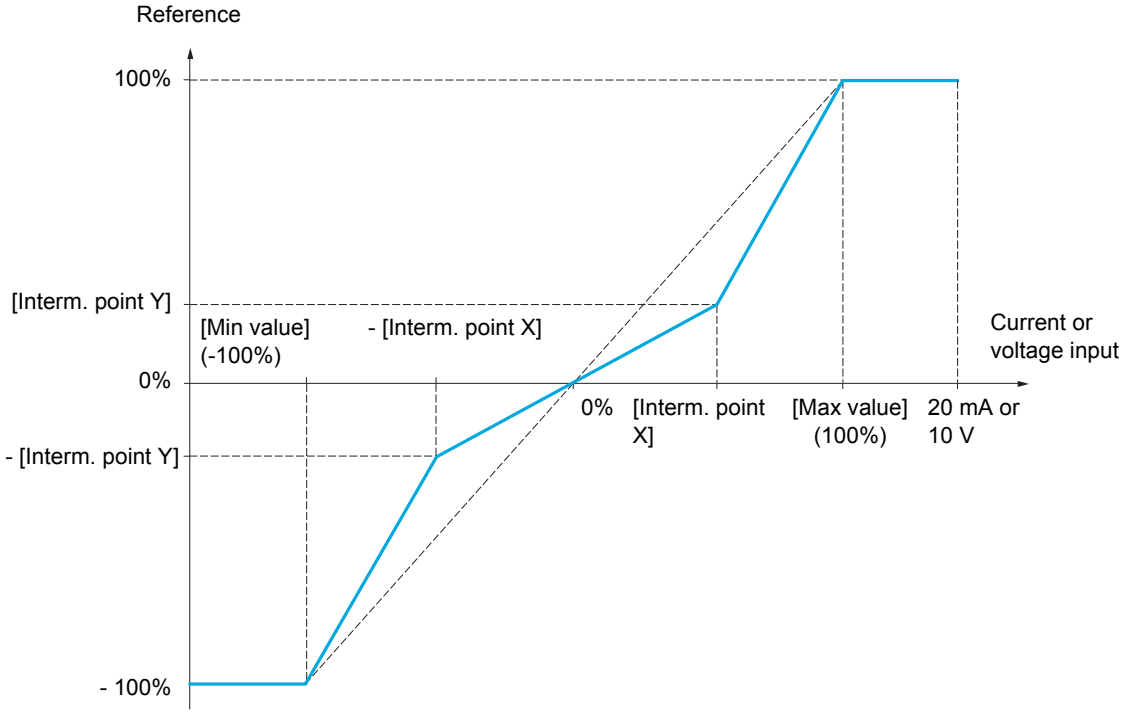

Parameters described in this page can be accessed by: DRI- > CONF > FULL > I_O- > AI1-

Code	Name / Description	Adjustment range	Factory setting
AI1-	**[AI1 CONFIGURATION]**		
AI1A	**[AI1 assignment]** Read-only parameter, cannot be configured. It displays all the functions associated with input AI1 in order to check, for example, for compatibility problems. nO **[No]** (nO): Not assigned AO1 **[AO1 assignment]** (AO1): Analog output AO1 Fr1 **[Ref.1 channel]** (Fr1): Reference source 1 Fr2 **[Ref.2 channel]** (Fr2): Reference source 2 SA2 **[Summing ref. 2]** (SA2): Summing reference 2 PIF **[PID feedback]** (PIF): PI feedback (PI control) tAA **[Torque limitation]** (tAA): Torque limitation: Activation by an analog value dA2 **[Subtract. ref. 2]** (dA2): Subtracting reference 2 PIM **[Manual PID ref.]** (PIM): Manual speed reference of the PI(D) regulator (auto-man) FPI **[PID speed ref.]** (FPI): Speed reference of the PI(D) regulator (predictive reference) SA3 **[Summing ref. 3]** (SA3): Summing reference 3 Fr1b **[Ref.1B channel]** (Fr1b): Reference source 1B dA3 **[Subtract. ref. 3]** (dA3): Subtracting reference 3 FLOC **[Forced local]** (FLOC): Forced local reference source MA2 **[Ref.2 multiplier]** (MA2): Multiplying reference 2 MA3 **[Ref. 3 multiplier]** (MA3): Multiplying reference 3 PES **[Weight input]** (PES): Hoisting: External weight measurement function IAO1 **[IA01]** (IAO1): Function blocks: Analog Input 01 . . . **...** IA10 **[IA10]** (IA10): Function blocks: Analog Input 10		
AI1t	**[AI1 Type]** 10U **[Voltage]** (10U): Positive voltage input 0 - 10 V (negative values are interpreted as zero: the input is unidirectional)		**[Voltage]** (10U)
UIL1	**[AI1 min value]** AI1 voltage scaling parameter of 0%.	0 to 10.0 V	0 V
UIH1	**[AI1 max value]** AI1 voltage scaling parameter of 100%.	0 to 10.0 V	10.0 V
AI1F	**[AI1 filter]** Interference filtering.	0 to 10.00 s	0 s
AI1L	**[AI1 range]** POS **[0 - 100%]** (POS): Positive logical nEG **[+/- 100%]** (nEG): Positive and negative logical		**[0 - 100%]** (POS)
AI1E	**[AI1 Interm. point X]** Input delinearization point coordinate. Percentage of the physical input signal. 0% corresponds to **[AI1 min value]** (UIL1). 100% corresponds to **[AI1 max value]** (UIH1).	0 to 100%	0%
AI1S	**[AI1 Interm. point Y]** Output delinearization point coordinate (frequency reference). Percentage of the internal frequency reference corresponding to the **[AI1 Interm. point X]** (AI1E) percentage of physical input signal.	0 to 100%	0%
I_O-	**[INPUTS / OUTPUTS CFG] (continued)**		
AI2-	**[AI2 CONFIGURATION]**		
AI2A	**[AI2 assignment]** Identical to **[AI1 assignment]** (AI1A) page 130.		
AI2t	**[AI2 Type]** 10U **[Voltage]** (10U): Positive voltage input 0 - 10 V (negative values are interpreted as zero: the input is unidirectional) n10U **[Voltage +/-]** (n10U): Positive and negative voltage input +/- 10 V (the input is bidirectional)		**[Voltage +/-]** (n10U)
UIL2	**[AI2 min value]** AI2 voltage scaling parameter of 0%.	0 to 10.0 V	0 V

Parameters described in this page can be accessed by: DRI- > CONF > FULL > I_O- > AI2-

Code	Name / Description	Adjustment range	Factory setting
UIH2	**[AI2 max. value]** AI2 voltage scaling parameter of 100%.	0 to 10.0 V	10.0 V
AI2F	**[AI2 filter]** Interference filtering.	0 to 10.00 s	0 s
AI2L POS nEG	**[AI2 range]** **[0 - 100%]** (POS): Positive logical **[+/- 100%]** (nEG): Positive and negative logical **[+/- 100%]** (nEG) available if (AI2t) **[AI2 Type]** (page 130) is set to **[Voltage +/-]** (nIOU)		**[0 - 100%]** (POS)
AI2E	**[AI2 Interm. point X]** Input delinearization point coordinate. Percentage of the physical input signal. 0% corresponds to **[Min value]** if the range is 0 ➔ 100%. 0% corresponds to $\frac{\text{[Max value]} + \text{[Min value]}}{2}$ if the range is -100% ➔ +100%. 100% corresponds to **[Max value]**.	0 to 100%	0%
AI2S	**[AI2 Interm. point Y]** Output delinearization point coordinate (frequency reference). Percentage of the internal frequency reference corresponding to the **[AI2 Interm. point X]** (AI2E) percentage of physical input signal.	0 to 100%	0%
I_O-	**[INPUTS / OUTPUTS CFG] (continued)**		
AI3-	**[AI3 CONFIGURATION]**		
AI3A	**[AI3 assignment]** Identical to **[AI1 assignment]** (AI1A) page 130.		
AI3t OA	**[AI3 Type]** **[Current]** (OA): Current input 0 - 20 mA		**[Current]** (OA)
CrL3	**[AI3 min. value]** AI3 current scaling parameter of 0%.	0 to 20.0 mA	0 mA
CrH3	**[AI3 max. value]** AI3 current scaling parameter of 100%.	0 to 20.0 mA	20.0 mA
AI3F	**[AI3 filter]** Interference filtering.	0 to 10.00 s	0 s
AI3L POS nEG	**[AI3 range]** **[0 - 100%]** (POS): Unidirectional input **[+/- 100%]** (nEG): Bidirectional input Example: On a 4 - 20 mA input. 4 mA corresponds to reference -100%. 12 mA corresponds to reference 0%. 20 mA corresponds to reference +100%. Since AI3 is, in physical terms, a bidirectional input, the **[+/- 100%]** (nEG) configuration must only be used if the signal applied is unidirectional. A bidirectional signal is not compatible with a bidirectional configuration.		**[0 - 100%]** (POS)
AI3E	**[AI3 Interm. point X]** Input delinearization point coordinate. Percentage of the physical input signal. 0% corresponds to **[Min value]** (CrL3) if the range is 0 ➔ 100%. 0% corresponds to $\frac{\text{[AI3 max. value]}\ (\text{CrH3}) - \text{[AI3 min. value]}}{(\text{CrL3})}$ if the range is -100% ➔ +100%. 100% corresponds to **[AI3 max. value]** (CrH3).	0 to 100%	0%
AI3S	**[AI3 Interm. point Y]** Output delinearization point coordinate (frequency reference). Percentage of the internal frequency reference corresponding to the **[AI3 Interm. point X]** (AI3E) percentage of physical input signal.	0 to 100%	0%

Parameters described in this page can be accessed by: DRI- > CONF > FULL > I_O- > AU2-

Code	Name / Description	Adjustment range	Factory setting
I_O-	**[INPUTS / OUTPUTS CFG] (continued)**		
AU1-	**[VIRTUAL AI1]**		
AU1A	**[AIV1 assignment]** Virtual analog input 1 via the jog dial available on the front side of the product. Identical to **[AI1 assignment]** (AI1A) page 130.		
AU2-	**[VIRTUAL AI2]**		
AU2A	**[AIV2 assignment]** Possible assignments for **[AI virtual 2]** (AIU2): Virtual analog input 2 via communication channel, to be configured with **[AI2 net. channel]** (AIC2). Identical to **[AIV1 assignment]** (AU1A) page 130.		
AIC2 ★ nO Mdb CAn nEt	**[AI2 net. Channel]** **[VIRTUAL AI2]** (AU2A) source channel. This parameter can also be accessed in the **[PID REGULATOR]** (PId-) submenu page 207. Scale: The value 8192 transmitted by this input is equivalent to 10 V on a 10 V input. **[No]** (nO): Not assigned **[Modbus]** (Mdb): Integrated Modbus **[CANopen]** (CAn): Integrated CANopen® **[Com. card]** (nEt): Communication card (if inserted)		**[No]** (nO)
IEn-	**[ENCODER CONFIGURATION]** Following parameters can be accessed if the speed monitoring card VW3A3620 has been inserted.		
EnU nO SEC	**[Encoder usage]** [No] (nO): Function inactive. [Fdbk monit.] (SEC): The encoder provides speed feedback for monitoring.		**[No]** (nO)
EnS ★ AAbb Ab	**[Encoder type]** Encoder usage configuration. Encoder usage configuration. To be configured in accordance with the type of encoder used. [AABB] (AAbb): For signals A, /A, B, /B. [AB] (Ab): For signals A, B. Following parameters can be accessed if [Encoder usage] (EnU) is set to [Fdbk monit.] (SEC).		**[AABB]** (AAbb)
PGI ★	**[Number of pulses]** Encoder usage configuration. Number of pulses per encoder revolution. Following parameters can be accessed if [Encoder usage] (EnU) is set to [Fdbk monit.] (SEC).	100 to 3600	1024

★ These parameters only appear if the corresponding function has been selected in another menu. When the parameters can also be accessed and adjusted from within the configuration menu for the corresponding function, their description is detailed in these menus, on the pages indicated, to aid programming.

Parameters described in this page can be accessed by: DRI- > CONF > FULL > I_O- > IEn-

Load slip detection :

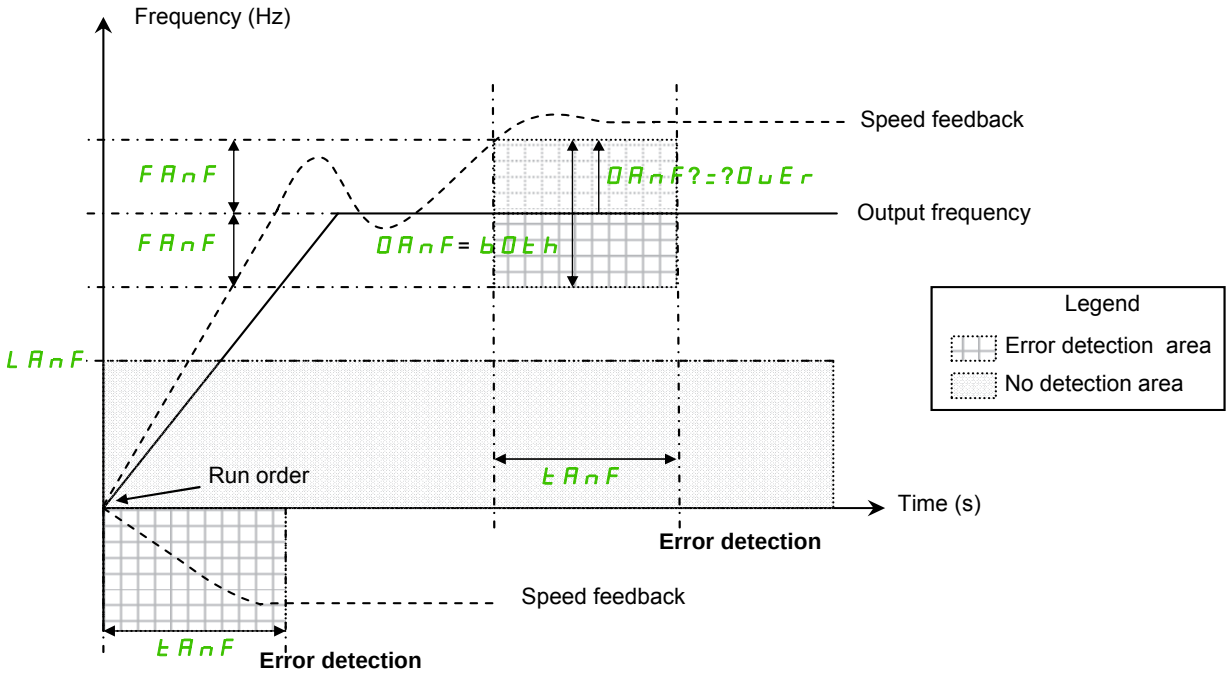

The drive will detect an error and display the error code [Load slipping] (AnF) in the following cases:

- As soon as the RUN order is received, if the sign of the output frequency and the speed feedback are in opposite way during [ANF Time Thd.] (tAnF).
- During operation:
  - if the speed feedback is in the same direction than the output frequency
  - and the speed feedback is over [ANF Detection level] (LAnF).
  - and,
    "if [ANF Direction check] (dAnF) is set to [Over] (OUEr), the difference between the output frequency and the speed feedback is over [ANF Frequency Thd.] (FAnF) during [ANF Time Thd.] (TAnF) (Overspeed detection).
    or,
    "if [ANF Direction check] (dAnF) is set to [Both] (bOth), the difference between the output frequency and the speed feedback is over [ANF Frequency Thd.] (FAnF) or below - [ANF Frequency Thd.] (FAnF) during [ANF Time Thd.] (tAnF) (Overspeed or underspeed detection).

Code	Name / Description	Adjustment range	Factory setting
I_O-	**[INPUTS / OUTPUTS CFG] (continued)**		
IEn-	**[ENCODER CONFIGURATION] (continued)** Following parameters can be accessed if the speed monitoring card VW3A3620 has been inserted and if [Encoder usage] (EnU) is set to [Fdbk monit.] (SEC).		
FAnF ★	**[ANF Frequency Thd.]** Level of [Load slipping] (AnF) detected error. The drive will not detect the error [Load slipping] (AnF) if the difference between the output frequency and the speed feedback is below than [ANF Frequency Thd.] (FAnF).	0.1 to 50 Hz	5.0 Hz
LAnF ★	**[ANF Detection level]** Level of ANF detected error. The drive will not detect the error [Load slipping] (AnF) if the speed feedback is below [ANF Detection level] (LAnF).	0 to 10 Hz	0.0 Hz

Parameters described in this page can be accessed by: DRI- > CONF > FULL > I_O- > IEn-

Code	Name / Description	Adjustment range	Factory setting
dAnF	**[ANF Direction check]**		**[Over]** (OUEr)
★ OUEr bOth	Available [Load slipping] (AnF) detection direction. [Over] (OUEr): The drive will detect the error [Load slipping] (AnF) in case of overspeed. [Both] (bOth): The drive will detect the error [Load slipping] (AnF) in case of overspeed or underspeed.		
tAnF ★	**[ANF Time Thd.]** Level of [Load slipping] (AnF) detected error. The drive will detect the error [Load slipping] (AnF) if the conditions are present during [ANF Time Thd.] (AnF).	0 to 10 s	0.10 s

★ These parameters only appear if the corresponding function has been selected in another menu. When the parameters can also be accessed and adjusted from within the configuration menu for the corresponding function, their description is detailed in these menus, on the pages indicated, to aid programming.

Parameters described in this page can be accessed by: DRI- > CONF > FULL > I_O- > LO1-

Code	Name / Description	Adjustment range	Factory setting
I_O-	**[INPUTS / OUTPUTS CFG] (continued)**		
r1-	**[R1 CONFIGURATION]**		
r1	**[R1 Assignment]**		**[No drive flt]** (FLt)
	nO **[No]** (nO): Not assigned FLt **[No drive flt]** (FLt): Drive fault detection status (relay normally energized, and de-energized if there is a trip) rUn **[Drv running]** (rUn): Drive running FtA **[Freq. Th. attain.]** (FtA): Frequency threshold attained (**[Freq. threshold]** (Ftd) page 99) FLA **[HSP attain.]** (FLA): High speed attained CtA **[I attained]** (CtA): Current threshold attained (**[Current threshold]** (Ctd) page 99) SrA **[Freq.ref.att]** (SrA): Frequency reference attained tSA **[Th.mot. att.]** (tSA): Motor 1 thermal state attained PEE **[PID error al]** (PEE): PID error alarm PFA **[PID fdbk al]** (PFA): PID feedback alarm F2A **[Freq. Th. 2 attained]** (F2A): Frequency threshold 2 attained (**[Freq. threshold 2]** (F2d) page 99) tAd **[Th. drv. att.]** (tAd): Drive thermal state attained ULA **[Pro.Undload]** (ULA): Underload alarm OLA **[Ovld.P.Alrm]** (OLA): Overload alarm rSdA **[Rope slack]** (rSdA): Rope slack (see **[Rope slack config.]** (rSd) parameter page 202) ttHA **[High tq. att.]** (ttHA): Motor torque overshooting high threshold **[High torque thd.]** (ttH) page 99 ttLA **[Low tq. att.]** (ttLA): Motor torque undershooting low threshold **[Low torque thd.]** (ttL) page 99 MFrd **[Forward]** (MFrd): Motor in forward rotation Mrrs **[Reverse]** (Mrrs): Motor in reverse rotation tS2 **[Th.mot2 att]** (tS2): Motor 2 thermal threshold (TTD2) reached tS3 **[Th.mot3 att]** (tS3): Motor 3 thermal threshold (TTD3) reached AtS **[Neg Torque]** (AtS): Negative torque (braking) CnF0 **[Cnfg.0 act.]** (CnF0): Configuration 0 active CnF1 **[Cnfg.1 act.]** (CnF1): Configuration 1 active CnF2 **[Cnfg.2 act.]** (CnF2): Configuration 2 active CFP1 **[Set 1 active]** (CFP1): Parameter set 1 active CFP2 **[Set 2 active]** (CFP2): Parameter set 2 active CFP3 **[Set 3 active]** (CFP3): Parameter set 3 active dbL **[DC charged]** (dbL): DC bus charging brS **[In braking]** (brS): Drive braking PrM **[P. removed]** (PrM): Drive locked by "Safe Torque Off" input F9LA **[Fr.met. alar.]** (F9LA): Measured speed threshold attained **[Pulse warning thd.]** (F9L) page 99 MCP **[I present] (MCP):** Motor current present LSA **[Limit sw. att]** (LSA): Limit switch attained dLdA **[Load alarm]** (dLdA): Load variation detection (see page 264) AG1 **[Alarm Grp 1]** (AG1): Alarm group 1 AG2 **[Alarm Grp 2]** (AG2): Alarm group 2 AG3 **[Alarm Grp 3]** (AG3): Alarm group 3 PLA **[LI6=PTC al.]** (PLA): LI6 = PTCL alarm EFA **[Ext. fault al]** (EFA): External fault alarm USA **[Under V. al.]** (USA): Undervoltage alarm UPA **[Uvolt warn]** (UPA): Undervoltage threshold tHA **[Al. °C drv]** (tHA): Drive overheating SSA **[Lim T/I att.]** (SSA): Torque limit alarm tJA **[IGBT al.]** (tJA): Thermal junction alarm AP3 **[AI3 Al. 4-20]** (AP3): AI3 4-20 mA loss alarm rdY **[Ready]** (rdY): Ready to start		
r1-	**[R1 CONFIGURATION] (continued)**		
r1d (1)	**[R1 Delay time]** The change in state only takes effect once the configured time has elapsed, when the information becomes true. The delay cannot be set for the **[No drive flt]** (FLt) assignment, and remains at 0.	0 to 60,000 ms	0 ms
r1S	**[R1 Active at]** Configuration of the operating logic: POS **[1]** (POS): State 1 when the information is true nEG **[0]** (nEG): State 0 when the information is true Configuration **[1]** (POS) cannot be modified for the **[No drive flt]** (FLt) assignment.		**[1]** (POS)

Parameters described in this page can be accessed by: DRI- > CONF > FULL > I_O- > DO1-

Code	Name / Description	Adjustment range	Factory setting
r1H	**[R1 Holding time]** The change in state only takes effect once the configured time has elapsed, when the information becomes false. The holding time cannot be set for the **[No drive flt]** (FLt) assignment, and remains at 0.	0 to 9,999 ms	0 ms
r1F YES nO	**[Enable Relay1 fallback]** Available if **[R1 Assignment]** (r1) page 135 is set **[No]** (nO) : Not assigned **[YES]** (YES): Relay controlled by OL1R. The relay is de-energized if the drive is in operating state "Fault" **[No]** (nO): Relay controlled by OL1R.		**[No]** (nO)
I_O-	**[INPUTS / OUTPUTS CFG] (continued)**		
r2-	**[R2 CONFIGURATION]**		
r2	**[R2 Assignment]** Identical to **[R1 Assignment]** (r1) page 135 with the addition of: bLC **[Brk control]** (bLC): Brake contactor control LLC **[Input cont.]** (LLC): Line contactor control OCC **[Output cont]** (OCC): Output contactor control EbO **[End reel]** (EbO): End of reel (traverse control function) tSY **[Sync. wobble]** (tSY): "Counter wobble" synchronization dCO **[DC charging]** (dCO): DC bus precharging contactor control OLO1 **[OL01]** (OLO1): Function blocks: Logical Output 01 ... **...** OL10 **[OL10]** (OL10): Function blocks: Logical Output 10		**[No]** (nO)
r2d (1)	**[R2 Delay time]** The delay cannot be set for the **[No drive flt]** (FLt), **[Brk control]** (bLC), **[Output cont.]** (OCC) and **[Input cont.]** (LLC) assignments, and remains at 0. The change in state only takes effect once the configured time has elapsed, when the information becomes true.	0 to 60,000 ms	0 ms
r2S POS nEG	**[R2 Active at]** Configuration of the operating logic: **[1]** (POS): State 1 when the information is true **[0]** (nEG): State 0 when the information is true The configuration **[1]** (POS) cannot be modified for the **[No drive flt]** (FLt), **[Brk control]** (bLC), **[DC charging]** (dCO), and **[Input cont.]** (LLC) assignments.		**[1]** (POS)
r2H	**[R2 Holding time]** The holding time cannot be set for the **[No drive flt]** (FLt), **[Brk control]** (bLC) and **[Input cont]** (LLC) assignments, and remains at 0. The change in state only takes effect once the configured time has elapsed, when the information becomes false.	0 to 9,999 ms	0 ms
r2F YES nO	**[Enable Relay2 fallback]** Available if **[R2 Assignment]** (r2) page 136 is set **[No]** (nO) : Not assigned **[YES]** (YES): Relay controlled by OL1R. The relay is de-energized if the drive is in operating state "Fault" **[No]** (nO): Relay controlled by OL1R.		**[No]** (nO)
I_O-	**[INPUTS / OUTPUTS CFG] (continued)**		
LO1-	**[LO1 CONFIGURATION]**		
LO1	**[LO1 assignment]** Identical to **[R1 Assignment]** (r1) page 135 with the addition of (shown for information only as these selections can only be configured in the **[APPLICATION FUNCT.]** (FUn-)) menu: bLC **[Brk control]** (bLC): Brake contactor control LLC **[Input cont.]** (LLC): Line contactor control OCC **[Output cont]** (OCC): Output contactor control EbO **[End reel]** (EbO): End of reel(traverse control function) tSY **[Sync. wobble]** (tSY): "Counter wobble" synchronization dCO **[DC charging]** (dCO): DC bus precharging contactor control OLO1 **[OL01]** (OLO1): Function blocks: Logical Output 01 ... **...** OL10 **[OL10]** (OL10): Function blocks: Logical Output 10		**[No]** (nO)

Code	Name / Description	Adjustment range	Factory setting
LO1d	**[LO1 delay time]**	0 to 60,000 ms (1)	0 ms
	The delay cannot be set for the **[No drive flt]** (FLt), **[Brk control]** (bLC), **[Output cont.]** (OCC) and **[Input cont.]** (LLC) assignments, and remains at 0. The change in state only takes effect once the configured time has elapsed, when the information becomes true.		
LO1S	**[LO1 active at]**		**[1]** (POS)
POS nEG	Configuration of the operating logic: **[1]** (POS): State 1 when the information is true **[0]** (nEG): State 0 when the information is true The configuration **[1]** (POS) cannot be modified for the **[No drive flt]** (FLt), **[Brk control]** (bLC) and **[Input cont.]** (LLC) assignments.		
LO1H	**[LO1 holding time]**	0 to 9,999 ms	0
	The holding time cannot be set for the **[No drive flt]** (FLt), **[Brk control]** (bLC) and **[Input cont]** (LLC) assignments, and remains at 0. The change in state only takes effect once the configured time has elapsed, when the information becomes false.		

(1) 0 to 9,999 ms then 10.00 to 60.00 s on the integrated display terminal.

Use of analog output AO1 as a logic output

Analog output AO1 can be used as a logic output, by assigning DO1. In this case, when set to 0, this output corresponds to the AO1 min. value (0 V, or 0 mA for example), and when set to 1 to the AO1 max. value (10 V, or 20 mA for example).

The electrical characteristics of this analog output remain unchanged. As these characteristics are different from logic output characteristics, check that it is still compatible with the intended application.

Code	Name / Description	Adjustment range	Factory setting
I_O-	**[INPUTS / OUTPUTS CFG] (continued)**		
dO1-	**[DO1 CONFIGURATION]**		
dO1	**[DO1 assignment]**		**[No]** (nO)
	Identical to **[R1 Assignment]** (r1) page 135 with the addition of (shown for information only as these selections can only be configured in the **[APPLICATION FUNCT.]** (FUn-)) menu: bLC **[Brk control]** (bLC): Brake contactor control LLC **[Input cont.]** (LLC): Line contactor control OCC **[Output cont]** (OCC): Output contactor control EbO **[End reel]** (EbO): End of reel(traverse control function) tSY **[Sync. wobble]** (tSY): "Counter wobble" synchronization dCO **[DC charging]** (dCO): DC bus precharging contactor control OLO1 **[OL01]** (OLO1): Function blocks: Logical Output 01 ... **...** OL10 **[OL10]** (OL10): Function blocks: Logical Output 10		
dO1d	**[DO1 delay time]**	0 to 60,000 ms (1)	0 ms
	The delay cannot be set for the **[No drive flt]** (FLt), **[Brk control]** (bLC), **[Output cont.]** (OCC) and **[Input cont.]** (LLC) assignments, and remains at 0. The change in state only takes effect once the configured time has elapsed, when the information becomes true.		
dO1S	**[DO1 active at]**		**[1]** (POS)
	Configuration of the operating logic: POS **[1]** (POS): State 1 when the information is true nEG **[0]** (nEG): State 0 when the information is true The configuration **[1]** (POS) cannot be modified for the **[No drive flt]** (FLt), **[Brk control]** (bLC) and **[Input cont.]** (LLC) assignments.		
dO1H	**[DO1 holding time]**	0 to 9,999 ms	0 ms
	The holding time cannot be set for the **[No drive flt]** (FLt), **[Brk control]** (bLC) and **[Input cont]** (LLC) assignments, and remains at 0. The change in state only takes effect once the configured time has elapsed, when the information becomes false.		

(1) 0 to 9,999 ms then 10.00 to 60.00 s on the integrated display terminal.

Parameters described in this page can be accessed by: DRI- > CONF > FULL > I_O- > AO1-

Configuration of analog output

Minimum and maximum values (output values):

The minimum output value, in volts, corresponds to the lower limit of the assigned parameter and the maximum value corresponds to its upper limit. The minimum value may be greater than the maximum value.

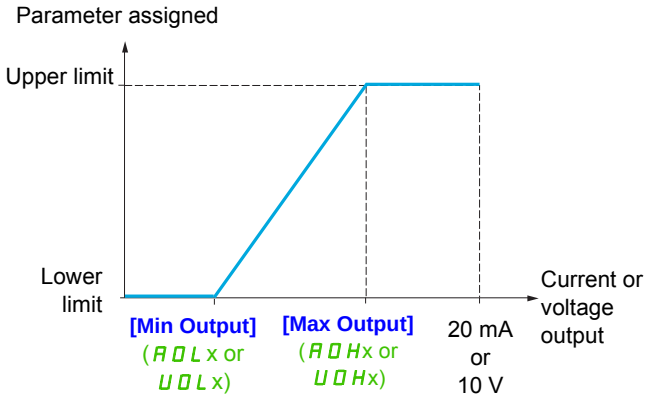

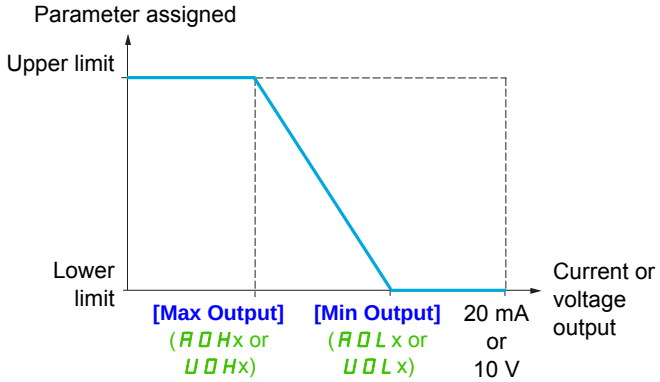

Parameters described in this page can be accessed by: DRI- > CONF > FULL > I_O- > A1C-

Scaling of the assigned parameter

The scale of the assigned parameter can be adapted in accordance with requirements by modifying the values of the lower and upper limits by means of two parameters for each analog output.

These parameters are given in %. 100% corresponds to the total variation range of the configured parameter, so: 100% = upper limit - lower limit For example, **[Sign. torque]** (SIq) which varies between -3 and +3 times the rated torque, 100% corresponds to 6 times the rated torque.

- The **[Scaling AOx min]** (ASLx) parameter modifies the lower limit: new value = lower limit + (range x ASLx). The value 0% (factory setting) does not modify the lower limit.
- The **[Scaling AOx max]** (ASHx) parameter modifies the upper limit: new value = lower limit + (range x ASLx). The value 100% (factory setting) does not modify the upper limit.
- **[Scaling AOx min]** (ASLx) must always be lower than **[Scaling AOx max]** (ASHx).

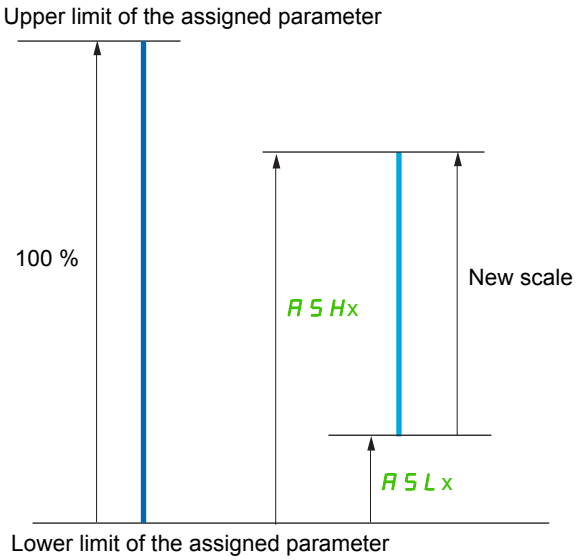

Application example 2

The value of the motor current at the AO1 output is to be transferred with 0 - 20 mA, range 2 In motor, In motor being the equivalent of a 0.8 In drive.

The **[I motor]** (OCr) parameter varies between 0 and 2 times the rated drive current, or a range of 2.5 times the rated drive current.

[Scaling AO1 min] (ASL1) must not modify the lower limit, which therefore remains at its factory setting of 0%.

[Scaling AO1 max] (ASH1) must modify the upper limit by 0.5x the rated motor torque, or 100 - 100/5 = 80% (new value = lower limit + (range x ASH1).

Code	Name / Description	Adjustment range	Factory setting
I_O-	**[INPUTS / OUTPUTS CFG] (continued)**		
AO1-	**[AO1 CONFIGURATION]**		
AO1	**[AO1 assignment]**		**[No]** (nO)
nO	**[No]** (nO): Not assigned		
OCr	**[I motor]** (OCr): Current in the motor, between 0 and 2 In (In = rated drive current indicated in the Installation manual and on the drive nameplate)		
OFr	**[Motor freq.]** (OFr): Output frequency, from 0 to **[Max frequency]** (tFr)		
OFS	**[Sig. o/p frq.]** (OFS): Signed output frequency, between - **[Max frequency]** (tFr) and + **[Max frequency]** (tFr)		
OrP	**[Ramp out.]** (OrP): From 0 to **[Max frequency]** (tFr)		
trq	**[Motor torq.]** (trq): Motor torque, between 0 and 3 times the rated motor torque		
Stq	**[Sign. torque]** (Stq): Signed motor torque, between -3 and +3 times the rated motor torque. The + sign corresponds to the motor mode and the - sign to the generator mode (braking).		
OrS	**[sign ramp]** (OrS): Signed ramp output, between - **[Max frequency]** (tFr) and + **[Max frequency]** (tFr).		
OPS	**[PID ref.]** (OPS): PID regulator reference between **[Min PID reference]** (PIP1) and **[Max PID reference]** (PIP2).		
OPF	**[PID feedbk]** (OPF): PID regulator feedback between **[Min PID feedback]** (PIF1) and **[Max PID feedback]** (PIF2)		
OPE	**[PID error]** (OPE): PID regulator error between- 5 % and + 5 % of (**[Max PID feedback]** (PIF2) - **[Min PID feedback]** (PIF1))		
OP1	**[PID output]** (OP1): PID regulator output between **[Low speed]** (LSP) and **[High speed]** (HSP)		
OPr	**[Mot. power]** (OPr): Motor power, between 0 and 2.5 times **[Rated motor power]** (nPr)		
UOP	**[Motor volt.]** (UOP): Voltage applied to the motor, between 0 and **[Rated motor volt.]** (UnS)		
tHr	**[Mot thermal]** (tHr): Motor thermal state, between 0 and 200% of the rated thermal state		
tHr2	**[Mot therm2]** (tHr2): Motor thermal state 2, between 0 and 200 % of the rated thermal state		
tHr3	**[Mot therm3]** (tHr3): Motor thermal state 3, between 0 and 200% of the rated thermal state		
tHd	**[Drv thermal]** (tHd): Drive thermal state, between 0 and 200% of the rated thermal state		
tqL	**[Torque lim.]** (tqL): Torque limit, between 0 and 3 times the rated motor torque		
dO1	**[dO1]** (dO1): Assignment to a logic output. This assignment can only appear if **[DO1 assignment]** (dO1) has been assigned. This is the only possible choice in this case, and is only displayed for informational purposes.		
tqnS	**[Torque 4Q]** (tqnS): Signed motor torque, between -3 and +3 times the rated motor torque. The + sign and the - sign correspond to the physical direction of the torque, regardless of mode (motor or generator).		
OAO1	**[OA01]** (OAO1): Function blocks: Analog Output 01		
...	**...**		
OA10	**[OA10]** (OA10): Function blocks: Analog Output 10		
AO1t	**[AO1 Type]**		**[Current]** (OA)
IOU	**[Voltage]** (IOU): Voltage output		
OA	**[Current]** (OA): Current output		
AOL1 ★	**[AO1 min Output]**	0 to 20.0 mA	0 mA
	This parameter can be accessed if **[AO1 Type]** (AO1t) is set to **[Current]** (OA).		
AOH1 ★	**[AO1 max Output]**	0 to 20.0 mA	20.0 mA
	This parameter can be accessed if **[AO1 Type]** (AO1t) is set to **[Current]** (OA).		
UOL1 ★	**[AO1 min Output]**	0 to 10.0 V	0 V
	This parameter can be accessed if **[AO1 Type]** (AO1t) is set to **[Voltage]** (IOU).		
UOH1 ★	**[AO1 max Output]**	0 to 10.0 V	10.0 V
	This parameter can be accessed if **[AO1 Type]** (AO1t) is set to **[Voltage]** (IOU).		
ASL1	**[Scaling AO1 min]**	0 to 100.0%	0%
	Scaling of the lower limit of the assigned parameter, as a % of the maximum possible variation.		
ASH1	**[Scaling AO1 max]**	0 to 100.0%	100.0%
	Scaling of the upper limit of the assigned parameter, as a % of the maximum possible variation.		
AO1F	**[AO1 Filter]**	0 to 10.00 s	0 s
	Interference filtering. This parameter is forced to 0 if **[AO1 assignment]** (AO1) is set to **[dO1]** (dO1).		

★ These parameters only appear if the corresponding function has been selected in another menu. When the parameters can also be accessed and adjusted from within the configuration menu for the corresponding function, their description is detailed in these menus, on the pages indicated, to aid programming.

The following submenus group the alarms into 1 to 3 groups, each of which can be assigned to a relay or a logic output for remote signaling. These groups can also be displayed on the graphic display terminal (see **[3.3 MONITORING CONFIG.]** (MCF-) menu page 282) and viewed via the **[1.2 MONITORING]** (MON-) menu page 45.

When one or a number of alarms selected in a group occurs, this alarm group is activated.

Code	Name / Description
I_O-	**[INPUTS / OUTPUTS CFG] (continued)**
A1C-	**[ALARM GRP1 DEFINITION]**
	Selection to be made from the following list:
PLA	**[LI6=PTC al.]** (PLA): LI6 = PTCL alarm
EFA	**[Ext. fault al.]** (EFA): External fault alarm
USA	**[Under V. al.]** (USA): Undervoltage alarm
CtA	**[I attained]** (CtA): Current threshold attained (**[Current threshold]** (Ctd) page 99)
FtA	**[Freq.Th.att.]** (FtA): Frequency threshold attained (**[Freq. threshold]** (Ftd) page 99)
F2A	**[Freq. th.2 attained]** (F2A): Frequency threshold 2 attained (**[Freq. threshold 2]** (F2d) page 99)
SrA	**[Freq.ref.att]** (SrA): Frequency reference attained
tSA	**[Th.mot. att.]** (tSA): Motor 1 thermal state attained
tS2	**[Th.mot2 att]** (tS2): Motor 2 thermal state attained
tS3	**[Th.mot3 att]** (tS3): Motor 3 thermal state attained
UPA	**[Uvolt warn]** (UPA): Undervoltage threshold
FLA	**[HSP attain.]** (FLA): High speed attained
tHA	**[Al. °C drv]** (tHA): Drive overheating
PEE	**[[PID error al]** (PEE): PID error alarm
PFA	**[PID fdbk al.]** (PFA): PID feedback alarm
AP3	**[AI3 Al. 4-20]** (AP3): Alarm indicating absence of 4-20 mA signal on input AI3
SSA	**[Lim T/I att.]** (SSA): Torque limit alarm
tAd	**[Th. drv. att.]** (tAd): Drive thermal state attained
tJA	**[IGBT alarm]** (tJA): IGBT alarm
ULA	**[Underload. Proc. Al.]** (ULA): Underload alarm
OLA	**[Overload. Proc. Al.]** (OLA): Overload alarm
rSdA	**[Rope slack alarm]** (rSdA): Rope slack (see **[Rope slack config.]** (rSd) parameter page 202)
ttHA	**[High torque alarm]** (ttHA): Motor torque overshooting high threshold **[High torque thd.]** (ttH) page 99.
ttLA	**[Low torque alarm]** (ttLA): Motor torque undershooting low threshold**[Low torque thd.]** (ttL) page 99.
FqLA	**[Freq. meter Alarm]** (FqLA): Measured speed threshold attained: **[Pulse warning thd.]** (FqL) page 99.
dLdA	**[Dynamic load alarm]** (dLdA): Load variation detection (see **[DYNAMIC LOAD DETECT.]** (dLd-) page 264).
	See the multiple selection procedure on page 33 for the integrated display terminal, and page 24 for the graphic display terminal.
A2C-	**[ALARM GRP2 DEFINITION]**
	Identical to **[ALARM GRP1 DEFINITION]** (A1C-) page 142.
A3C-	**[ALARM GRP3 DEFINITION]**
	Identical to **[ALARM GRP1 DEFINITION]** (A1C-) page 142.

Command

The parameters in the **[COMMAND]** (CtL-) menu can only be modified when the drive is stopped and no run command is present.

Command and reference channels

Run commands (forward, reverse, stop, etc.) and references can be sent using the following channels:

Command	Reference
Terminals: logic inputs LI or analog inputs used as logic inputs LA Function blocks Remote display terminal Graphic display terminal Integrated Modbus Integrated CANopen® Communication card	Terminals: analog inputs AI, pulse input Function blocks Remote display terminal Graphic display terminal Integrated Modbus Integrated CANopen® Communication card +/- speed via the terminals +/- speed via the graphic display terminal

⚠ DANGER

UNINTENDED EQUIPMENT OPERATION

When analog inputs **[AI1]** (AI1) or **[AI2]** (AI2) are used as logic inputs (**[LAI1]** (LAI1) or **[LAI2]** (LAI2)) in a configuration, they remain active in their behaviors in analog input mode (example : **[Ref.1 channel]** (Fr1) is still set to **[AI1]** (AI1)).

• Remove the configuration of **[AI1]** (AI1) or **[AI2]** (AI2) in analog input mode

or

• Check this behavior will not endanger personnel or equipment in any way

Failure to follow these instructions will result in death or serious injury.

Note: **[LA1]** (LA1) and **[LA2]** (LA2) can be used as 2 logic inputs in source mode only.

- + 24 V power supply (max. 30 V)
- State 0 if < 7.5 V, state 1 if > 8.5 V.

Note: The stop keys on the graphic display terminal or remote display can be programmed as non-priority keys. A stop key can only have priority if the **[Stop Key priority]** (PSt) parameter in the **[COMMAND]** (CtL-) menu, page 151 is set to **[Yes]** (YES).

The behavior of the Altivar 32 can be adapted according to requirements:

- **[Not separ.]** (SIM): Command and reference are sent via the same channel.
- **[Separate]** (SEP): Command and reference may be sent via different channels.

In these configurations, control via the communication bus is performed in accordance with the DRIVECOM standard with only 5 freely-assignable bits (see Communication Parameters Manual). The application functions cannot be accessed via the communication interface.

- **[I/O profile]** (IO): The command and the reference can come from different channels. This configuration both simplifies and extends use via the communication interface. Commands may be sent via the logic inputs on the terminals or via the communication bus. When commands are sent via a bus, they are available on a word, which acts as virtual terminals containing only logic inputs. Application functions can be assigned to the bits in this word. More than one function can be assigned to the same bit.

Note: Stop commands from the graphic display terminal or remote display terminal remain active even if the terminals are not the active command channel.

Reference channel for [Not separ.] (S IN), [Separate] (S E P) and [I/O profile] (IO) configurations, PID not configured

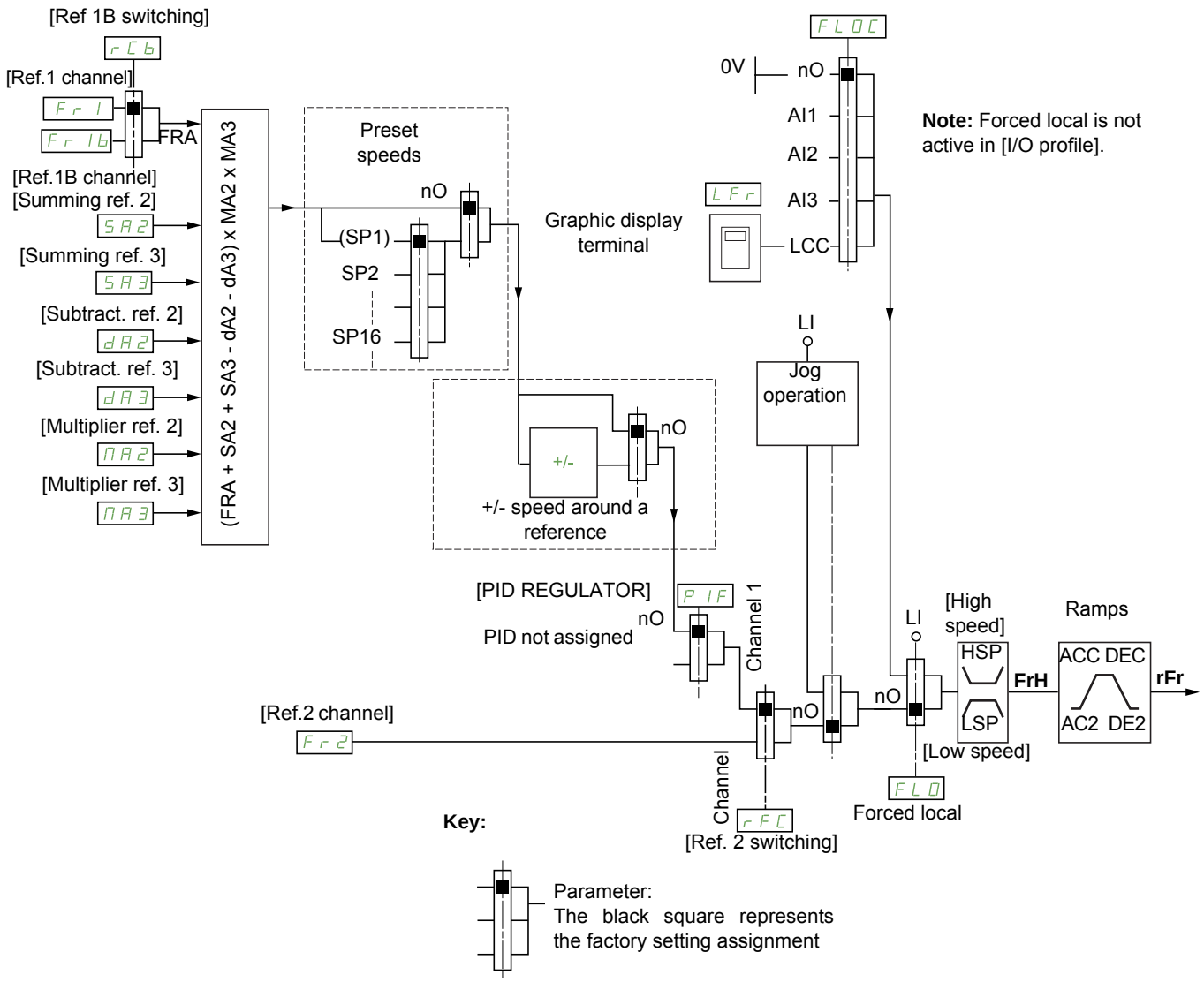

Fr1, SA2, SA3, dA2, dA3, MA2, MA3:

- Terminals, graphic display terminal, integrated Modbus, integrated CANopen®, communication card

Fr1b, for SEP and IO:

- Terminals, graphic display terminal, integrated Modbus, integrated CANopen®, communication card

Fr1b, for S IN:

- Terminals, only accessible if Fr1 = terminals

Fr2:

- Terminals, graphic display terminal, integrated Modbus, integrated CANopen®, communication card, and +/- speed

Note: [Ref.1B channel] (Fr1b) and **[Ref 1B switching]** (rCb) must be configured in the **[APPLICATION FUNCT.]** (Fun-) menu.

Reference channel for [Not separ.] (S IN), [Separate] (S E P) and [I/O profile] (I O) configurations, PID configured with PID references at the terminals

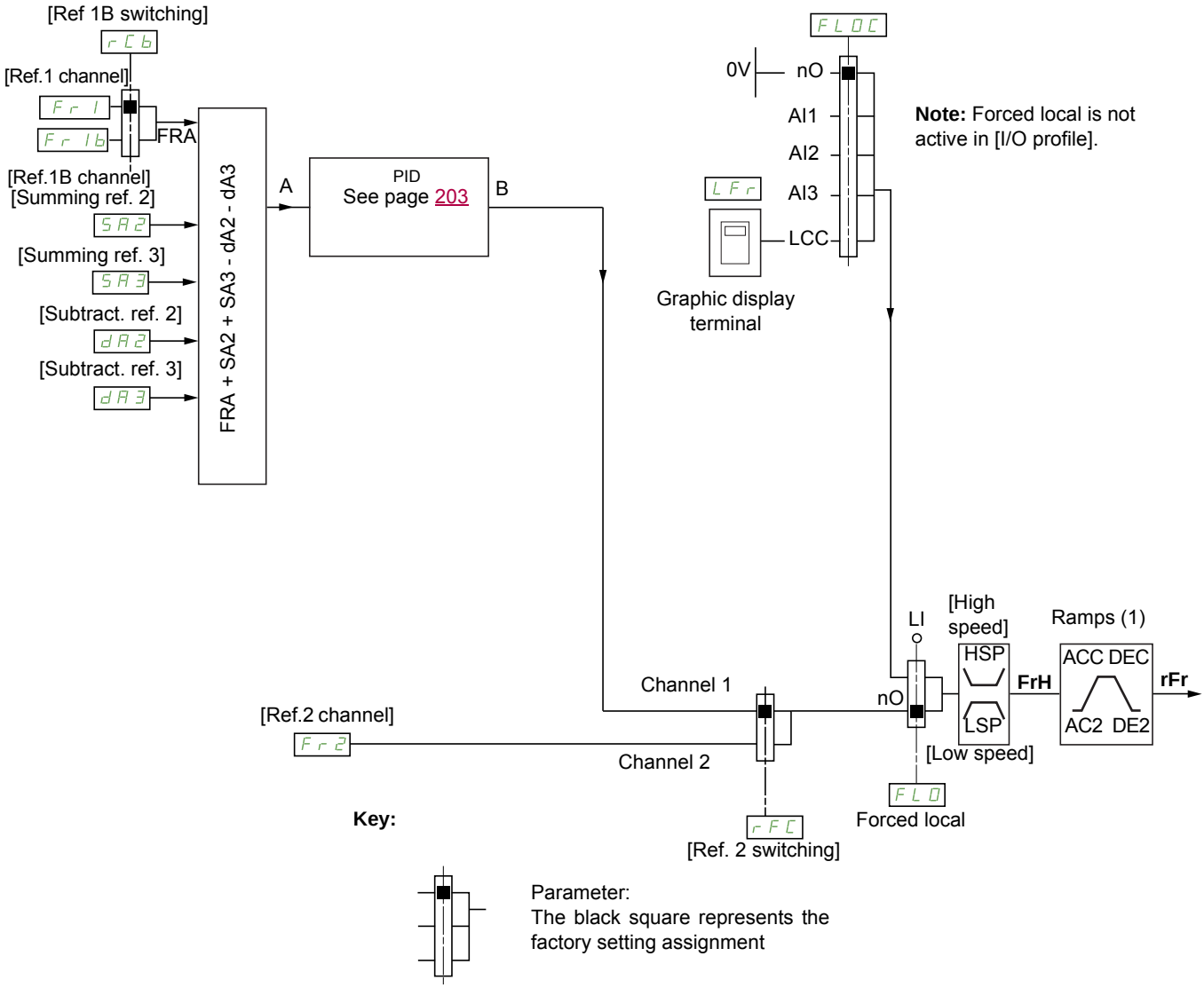

(1) Ramps not active if the PID function is active in automatic mode.

F r 1:
- Terminals, graphic display terminal, integrated Modbus, integrated CANopen®, communication card

F r 1b, for S E P and I O:
- Terminals, graphic display terminal, integrated Modbus, integrated CANopen®, communication card

F r 1b, for S IN:
- Terminals, only accessible if F r 1 = terminals

S A 2, S A 3, d A 2, d A 3:
- Terminals only

F r 2:
- Terminals, graphic display terminal, integrated Modbus, integrated CANopen®, communication card, **and +/- speed**

Note: [Ref.1B channel] (F r 1b) and **[Ref 1B switching]** (r C b) must be configured in the **[APPLICATION FUNCT.]** (F u n -) menu.

Command channel for [Not separ.] (S IM) configuration

Reference and command, not separate

The command channel is determined by the reference channel. Parameters Fr1, Fr2, rFC, FLO and FLOC are common to reference and command.

Example: If the reference is Fr1 = AI1 (analog input at the terminals), control is via L1 (logic input at the terminals).

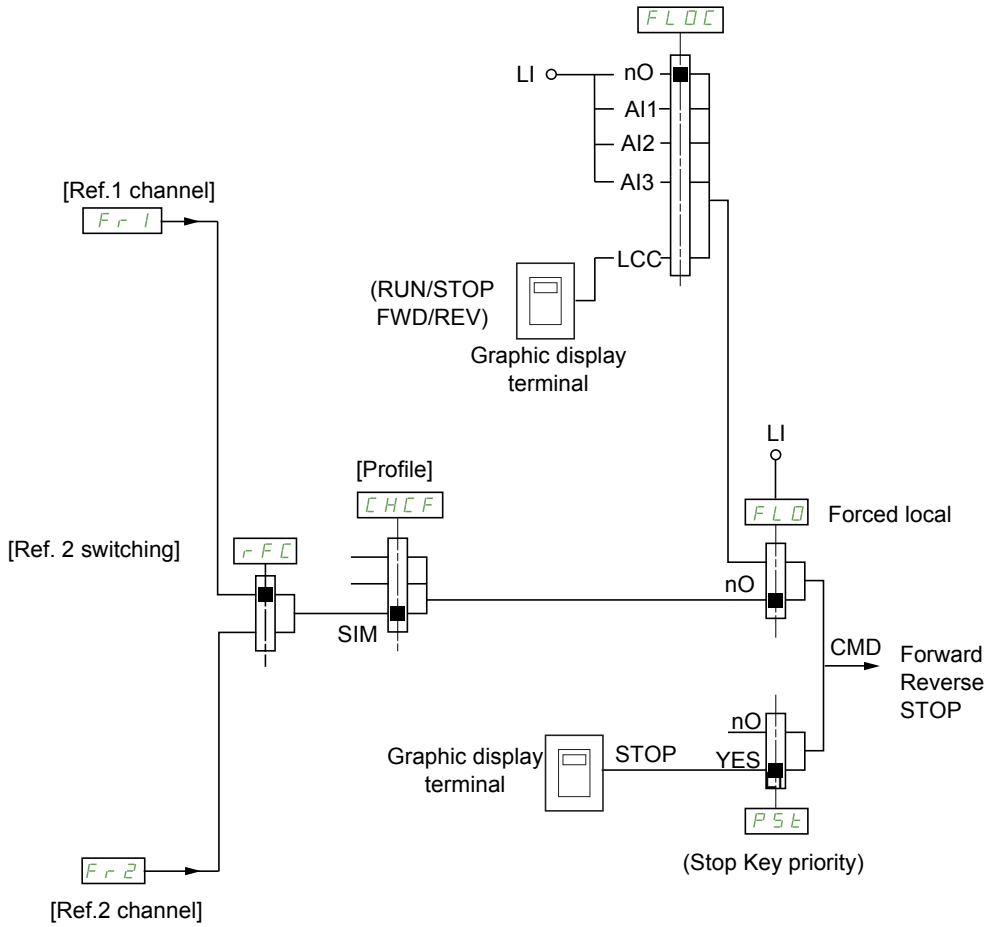

Key:

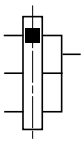

Parameter:
The black square represents
the factory setting assignment

Command channel for [Separate] (SEP) configuration

Separate reference and command

Parameters FLO and FLOC are common to reference and command.

Example: If the reference is in forced local mode via AI1 (analog input at the terminals), command in forced local mode is via LI1 (logic input at the terminals).

The command channels Cd1 and Cd2 are independent of the reference channels Fr1, Fr1b and Fr2.

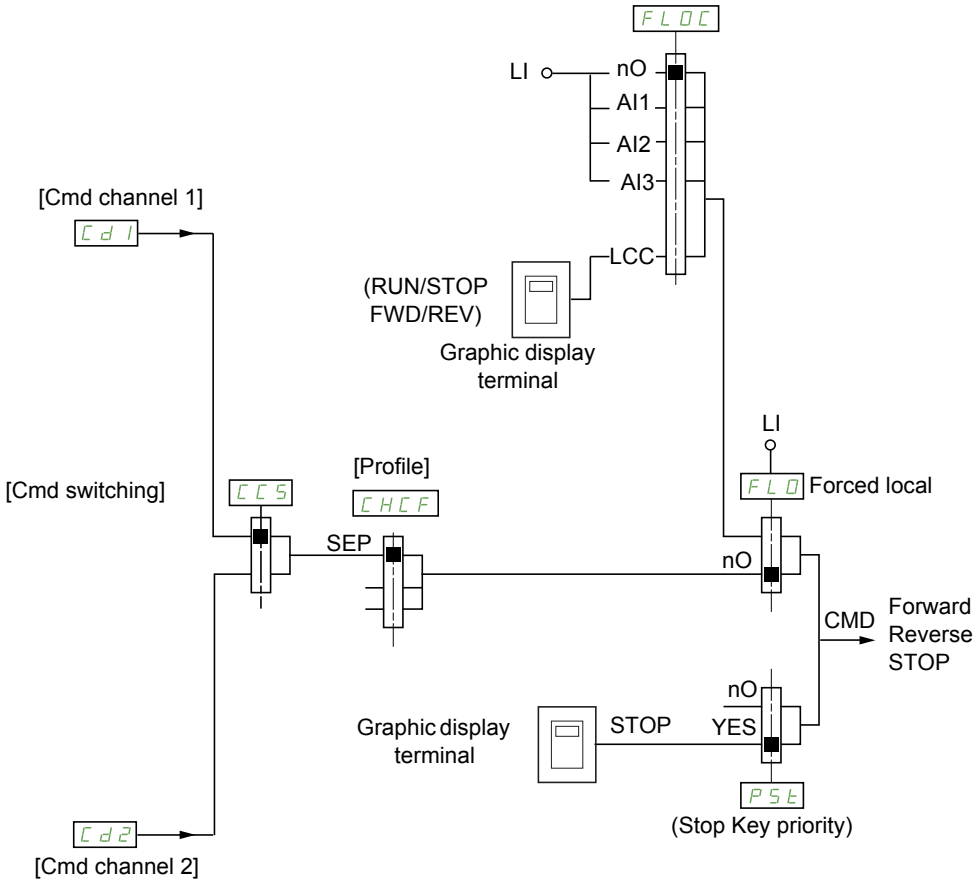

Key:

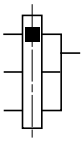

Parameter:
The black square represents the factory setting assignment, except for [Profile].

Cd1, Cd2:

- Terminals, graphic display terminal, integrated Modbus, integrated CANopen®, communication card

Command channel for [I/O profile] (IO) configuration

Separate reference and command, as in **[Separate]** (SEP) configuration

The command channels Cd1 and Cd2 are independent of the reference channels Fr1, Fr1b and Fr2.

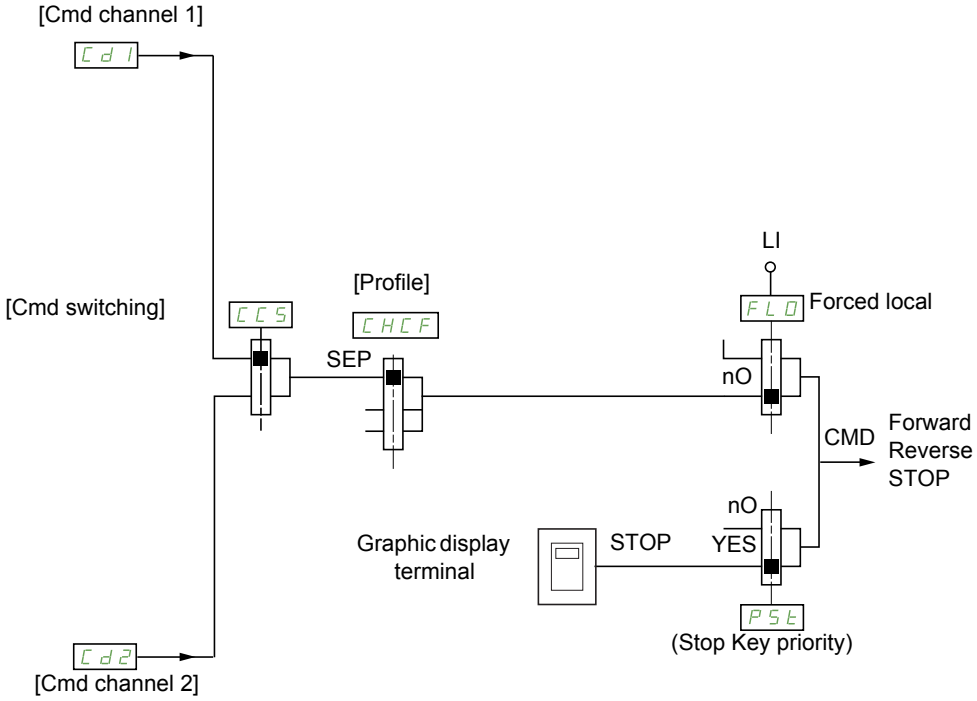

Key:

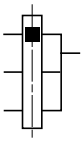

Parameter:
The black square represents the factory setting assignment, except for [Profile].

Cd1, Cd2:

- Terminals, graphic display terminal, integrated Modbus, integrated CANopen®, communication card

A command or an action can be assigned:

- To a fixed channel by selecting an LI input or a Cxxx bit:
  - By selecting, for example, LI3, this action will be triggered by LI3 regardless of which command channel is switched.
  - By selecting, for example, C214, this action will be triggered by integrated CANopen® with bit 14 regardless of which command channel is switched.
- To a switchable channel by selecting a CDxx bit:
  - By selecting, for example, Cd11, this action will be triggered by:
    - LI12 if the terminals channel is active
    - C111 if the integrated Modbus channel is active
    - C211 if the integrated CANopen® channel is active
    - C311 if the communication card channel is active

If the active channel is the graphic display terminal, the functions and commands assigned to CDxx switchable internal bits are inactive.

Note: CD06 to Cd13 can only be used for switching between 2 networks. They do not have equivalent logic inputs.

Parameters described in this page can be accessed by: DRI- > CONF > FULL > CTL-

Terminals	Integrated Modbus	Integrated CANopen®	Communication card	Internal bit, can be switched
				CD00
LI2 (1)	C101 (1)	C201 (1)	C301 (1)	CD01
LI3	C102	C202	C302	CD02
LI4	C103	C203	C303	CD03
LI5	C104	C204	C304	CD04
LI6	C105	C205	C305	CD05
-	C106	C206	C306	CD06
-	C107	C207	C307	CD07
-	C108	C208	C308	CD08
-	C109	C209	C309	CD09
-	C110	C210	C310	CD10
-	C111	C211	C311	CD11
-	C112	C212	C312	CD12
LAI1	C113	C213	C313	CD13
LAI2	C114	C214	C314	CD14
-	C115	C215	C315	CD15
OL01 to OL10				

(1) If **[2/3 wire control]** (tCC) page 83 is set to **[3 wire]** (3C), LI2, C101, C201 and C301 cannot be accessed.

Parameters described in this page can be accessed by: DRI- > CONF > FULL > CTL-

Assignment conditions for logic inputs and control bits

The following elements are available for every command or function that can be assigned to a logic input or a control bit:

[LI1] (L I 1) to **[LI6]** (L I 6)	Drive with or without option
[LAI1] (L A I 1) to **[LAI2]** (L A I 2)	Logical inputs
[C101] (C I 0 1) to **[C110]** (C 1 1 0)	With integrated Modbus in **[I/O profile]** (I 0) configuration
[C111] (C 1 1 1) to **[C115]** (C 1 1 5)	With integrated Modbus regardless of configuration
[C201] (C 2 0 1) to **[C210]** (C 2 1 0)	With integrated CANopen® in **[I/O profile]** (I 0) configuration
[C211] (C 2 1 1) to **[C215]** (C 2 1 5)	With integrated CANopen® regardless of configuration
[C301] (C 3 0 1) to **[C310]** (C 3 1 0)	With a communication card in **[I/O profile]** (I 0) configuration
[C311] (C 3 1 1) to **[C315]** (C 3 1 5)	With a communication card regardless of configuration
[CD00] (C d 0 0) to **[CD10]** (C d 1 0)	In **[I/O profile]** (I 0) configuration
[CD11] (C d 1 1) to **[CD15]** (C d 1 5)	Regardless of configuration
[OL01] (O L 0 1) to **[OL10]** (O L 1 0)	Regardless of configuration

Note: In **[I/O profile]** (I 0) configuration, L I 1 cannot be accessed and if **[2/3 wire control]** (t C C) page 83 is set to **[3 wire]** (3 C), L I 2, C 1 0 1, C 2 0 1 and C 3 0 1 cannot be accessed either.

⚠ WARNING

LOSS OF CONTROL
Inactive communication channels are not monitored (no trip in the event of a communication bus interruption).
Check that the commands and functions assigned to bits C101 to C315 will not pose a risk in the event of the interruption of the associated communication bus.
Failure to follow these instructions can result in death, serious injury, or equipment damage.

Parameters described in this page can be accessed by: DRI- > CONF > FULL > CTL-

Code	Name / Description	Adjustment range	Factory setting
FULL	**[FULL] (continued)**		
CTL-	**[COMMAND]**		
Fr1	**[Ref.1 channel]** AI1 **[AI1]** (AI1): Analog input A1 AI2 **[AI2]** (AI2): Analog input A2 AI3 **[AI3]** (AI3): Analog input A3 LCC **[HMI]** (LCC): Graphic display terminal or remote display terminal source Mdb **[Modbus]** (Mdb): Integrated Modbus CAn **[CANopen]** (CAn): Integrated CANopen® nET **[Com. card]** (nET): Communication card (if inserted) PI **[RP]** (PI): Pulse input AIU1 **[AI virtual 1]** (AIU1): Virtual analog input 1 with the jog dial (only available if **[Profile]** (CHCF) is not set to **[Not separ.]** (SIM)) OAO1 **[OA01]** (OAO1): Function blocks: Analog Output 01 . . . **...** OA10 **[OA10]** (OA10): Function blocks: Analog Output 10		**[AI1]** (AI1)
rIn	**[RV Inhibition]** Inhibition of movement in reverse direction, does not apply to direction requests sent by logic inputs. Reverse direction requests sent by logic inputs are taken into account. Reverse direction requests sent by the graphic display terminal are not taken into account. Reverse direction requests sent by the line are not taken into account. Any reverse speed reference originating from the PID, summing input, etc., is interpreted as a zero reference (0 Hz). nO **[No]** (nO) YES **[Yes]** (YES)		**[No]** (nO)
PSt 2 s	**[Stop Key priority]** **⚠ WARNING** **LOSS OF CONTROL** You are going to disable the stop key located on the remote displays. Do not select **[No]** (nO) unless exterior stopping methods exist. **Failure to follow these instructions can result in death, serious injury, or equipment damage.** This will be a freewheel stop. If the active command channel is the graphic display terminal, the stop will be performed according to the **[Type of stop]** (Stt) page 170 irrespective of the configuration of **[Stop Key priority]** (PSt). nO **[No]** (nO) YES **[Yes]** (YES): Gives priority to the STOP key on the graphic display terminal when the graphic display terminal is not enabled as the command channel.		**[Yes]** (YES)
CHCF 2 s	**[Profile]** **⚠ DANGER** **UNINTENDED EQUIPMENT OPERATION** When **[I/O profile]** (IO) is deselected, the drive automatically returns to the factory setting. Check that the modification of the current configuration is compatible with the wiring diagram used. **Failure to follow these instructions will result in death or serious injury.** SIM **[Not separ.]** (SIM): Reference and command, not separate SEP **[Separate]** (SEP): Separate reference and command. This assignment cannot be accessed in **[I/O profile]** (IO). IO **[I/O profile]** (IO): I/O profile		**[Not separ.]** (SIM)

Parameters described in this page can be accessed by: DRI- > CONF > FULL > CTL-

Code	Name / Description	Adjustment range	Factory setting
CCS	**[Cmd switching]**		**[ch1 active]** (Cd1)
★	This parameter can be accessed if **[Profile]** (CHCF) is set to **[Separate]** (SEP) or **[I/O profile]** (IO). If the assigned input or bit is at 0, channel **[Cmd channel 1]** (Cd1) is active. If the assigned input or bit is at 1, channel **[Cmd channel 2]** (Cd2) is active.		
Cd1	**[ch1 active]** (Cd1): **[Cmd channel 1]** (Cd1) active (no switching)		
Cd2	**[ch2 active]** (Cd2): **[Cmd channel 2]** (Cd2) active (no switching)		
LI1	**[LI1]** (LI1): Logical input LI1		
...	**[...]** (...): See the assignment conditions on page 150 (not CD00 to CD15)		
Cd1	**[Cmd channel 1]**		**[Terminals]** (tEr)
★	This parameter can be accessed if **[Profile]** (CHCF) is set to **[Separate]** (SEP) or **[I/O profile]** (IO).		
tEr	**[Terminals]** (tEr): Terminals		
LCC	**[HMI]** (LCC): Graphic display terminal or remote display terminal		
Mdb	**[Modbus]** (Mdb): Integrated Modbus		
CAn	**[CANopen]** (CAn): Integrated CANopen®		
nEt	**[Com. card]** (nEt): Communication card (if inserted)		
Cd2	**[Cmd channel 2]**		**[Modbus]** (Mdb)
★	This parameter can be accessed if **[Profile]** (CHCF) is set to **[Separate]** (SEP) or **[I/O profile]** (IO).		
tEr	**[Terminals]** (tEr): Terminals		
LCC	**[HMI]** (LCC): Graphic display terminal or remote display terminal		
Mdb	**[Modbus]** (Mdb): Integrated Modbus		
CAn	**[CANopen]** (CAn): Integrated CANopen®		
nEt	**[Com. card]** (nEt): Communication card (if inserted)		
rFC	**[Ref. 2 switching]**		**[Ref.1 channel]** (Fr1)
	This parameter can be accessed if **[Profile]** (CHCF) is set to **[Separate]** (SEP) or **[I/O profile]** (IO). If the assigned input or bit is at 0, channel **[Cmd channel 1]** (Cd1) is active. If the assigned input or bit is at 1, channel **[Cmd channel 2]** (Cd2) is active.		
Fr1	**[Ref. 1 channel]** (Fr1): **[Cmd channel 1]** (Cd1) active (no switching)		
Fr2	**[Ref. 2 channel]** (Fr2): **[Cmd channel 2]** (Cd2) active (no switching)		
LI1	**[LI1]** (LI1): Logical input LI1		
...	**[...]** (...): See the assignment conditions on page 150 (not CD00 to CD15)		
Fr2	**[Ref.2 channel]**		**[No]** (nO)
nO	**[No]** (nO): Not assigned. If **[Profile]** (CHCF) is set to **[Not separ.]** (SIM), the command is at the terminals with a zero reference. If **[Profile]** (CHCF) is set to **[Separate]** (SEP) or **[I/O profile]** (IO), the reference is zero.		
AI1	**[AI1]** (AI1): Analog input A1		
AI2	**[AI2]** (AI2): Analog input A2		
AI3	**[AI3]** (AI3): Analog input A3		
UPdt	**[+/-Speed]** (UPdt): +/- speed command		
LCC	**[HMI]** (LCC): Graphic display terminal or remote display terminal		
Mdb	**[Modbus]** (Mdb): Integrated Modbus		
CAn	**[CANopen]** (CAn): Integrated CANopen®		
nEt	**[Com. card]** (nEt): Communication card (if inserted)		
PI	**[RP]** (PI): Pulse input		
AIU1	**[AI virtual 1]** (AIU1): Virtual analog input 1 with the jog dial		
OAO1	**[OA01]** (OAO1): Function blocks: Analog Output 01		
...	...		
OA10	**[OA10]** (OA10): Function blocks: Analog Output 10		

Parameters described in this page can be accessed by: DRI- > CONF > FULL > FBM- > MFB-

Code	Name / Description	Adjustment range	Factory setting
COP	**[Copy channel 1 <> 2]**		**[No]** (nO)

2 s

⚠ DANGER

UNINTENDED EQUIPMENT OPERATION
Copying the command and/or reference can change the direction of rotation.
Check that this is safe.
Failure to follow these instructions will result in death or serious injury.

Can be used to copy the current reference and/or the command by means of switching, in order to avoid speed surges, for example.
If **[Profile]** (CHCF) page 151 is set to **[Not separ.]** (SIM) or **[Separate]** (SEP), copying will only be possible from channel 1 to channel 2.
If **[Profile]** (CHCF) is set to **[I/O profile]** (IO), copying will be possible in both directions.
A reference or a command cannot be copied to a channel on the terminals.
The reference copied is **[Frequency ref.]** (FrH) (before ramp) unless the destination channel reference is set via +/- speed. In this case, the reference copied is **[Output frequency]** (rFr) (after ramp).

nO **[No]** (nO): No copy
SP **[Reference]** (SP): Copy reference
Cd **[Command]** (Cd): Copy command
ALL **[Cmd + ref.]** (ALL): Copy command and reference

★ These parameters only appear if the corresponding function has been selected in another menu. When the parameters can also be accessed and adjusted from within the configuration menu for the corresponding function, their description is detailed in these menus, on the pages indicated, to aid programming.

2 s To change the assignment of this parameter, press the ENT key for 2 s.

Parameters described in this page can be accessed by: DRI- > CONF > FULL > FBM-

As the graphic display terminal may be selected as the command and/or reference channel, its action modes can be configured.

The parameters on this page can only be accessed on the graphic display terminal, and not on the integrated display terminal.

Comments:

- The display terminal command/reference is only active if the command and/or reference channels from the terminal are active with the exception of **[T/K]** (F t) (command via the display terminal), which takes priority over these channels. Press **[T/K]** (F t) (command via the display terminal) again to revert control to the selected channel.
- Command and reference via the display terminal are impossible if the latter is connected to more than one drive.
- The JOG, preset speed and +/- speed functions can only be accessed if **[Profile]** (C H C F) is set to **[Not separ.]** (S I M).
- The preset PID reference functions can only be accessed if **[Profile]** (C H C F) is set to **[Not separ.]** (S I M) or **[Separate]** (S E P).
- The **[T/K]** (F t) (command via the display terminal) can be accessed regardless of the **[Profile]** (C H C F).

Code	Name / Description	Adjustment range	Factory setting
F n 1	**[F1 key assignment]**		**[No]** (n O)
n O	**[No]** (n O): Not assigned		
F J O G	**[Jog]** (F J O G): JOG operation		
F P S 1	**[Preset spd2]** (F P S 1): Press the key to run the drive at the 2nd preset speed **[Preset speed 2]** (S P 2) page 94. Press STOP to stop the drive.		
F P S 2	**[Preset spd3]** (F P S 2): Press the key to run the drive at the 3rd preset speed **[Preset speed 3]** (S P 3) page 94. Press STOP to stop the drive.		
F P r 1	**[PID ref. 2]** (F P r 1): Sets a PID reference equal to the 2nd preset PID reference **[Preset ref. PID 2]** (r P 2) page 96, without sending a run command. Only operates if **[Ref.1 channel]** (F r 1) is set to **[HMI]** (L C C). Does not operate with the **[T/K]** (F t) function.		
F P r 2	**[PID ref. 3]** (F P r 2): Sets a PID reference equal to the 3rd preset PID reference **[Preset ref. PID 3]** (r P 3) page 97, without sending a run command. Only operates if **[Ref.1 channel]** (F r 1) is set to **[HMI]** (L C C). Does not operate with the **[T/K]** (F t) function.		
F u S P	**[+speed]** (F U S P): Faster, only operates if **[Ref.2 channel]** (F r 2) is set to **[HMI]** (L C C). Press the key to run the drive and increase the speed. Press STOP to stop the drive.		
F d S P	**[- speed]** (F d S P): Slower, only operates if **[Ref.2 channel]** (F r 2) is set to **[HMI]** (L C C) and if a different key has been assigned to **[+ speed]**. Press the key to run the drive and decrease the speed. Press STOP to stop the drive.		
F t	**[T/K]** (F t): Command via the display terminal: Takes priority over **[Cmd switching]** (C C S) and over **[Ref. 2 switching]** (r F C).		
F n 2	**[F2 key assignment]**		**[No]** (n O)
	Identical to **[F1 key assignment]** (F n 1) page 154.		
F n 3	**[F3 key assignment]**		**[No]** (n O)
	Identical to **[F1 key assignment]** (F n 1) page 154.		
F n 4	**[F4 key assignment]**		**[No]** (n O)
	Identical to **[F1 key assignment]** (F n 1) page 154.		
b M P	**[HMI cmd.]**		**[Stop]** (S t O P)
★	When the **[T/K]** (F t) function is assigned to a key and that function is active, this parameter defines the behavior at the moment when control returns to the graphic display terminal or remote display terminal.		
S t O P	**[Stop]** (S t O P): Stops the drive (although the controlled direction of operation and reference of the previous channel are copied (to be taken into account on the next RUN command)).		
b U M F	**[Bumpless]** (b U M F): Does not stop the drive (the controlled direction of operation and the reference of the previous channel are copied)		

★ These parameters only appear if the corresponding function has been selected in another menu. When the parameters can also be accessed and adjusted from within the configuration menu for the corresponding function, their description is detailed in these menus, on the pages indicated, to aid programming.

Parameters described in this page can be accessed by: DRI- > CONF > FULL > FBM- > FBA-

Function Block Management

Code	Name / Description	Adjustment range	Factory setting
FULL	**[FULL] (continued)**		
FbM-	**[FUNCTION BLOCKS]**		
MFb-	**[MONIT. FUN. BLOCKS]** **Note:** This section shows only what is possible to do with local or remote display on the drive. For advanced configuration using PC software, please refer to the dedicated Function blocks manual.		
FbSt	**[FB Status]**		
IdLE	**[Idle]** (IdLE): No binary file in the target, the FB is waiting for a download		
CHEC	**[Check prog.]** (CHEC): Check the program downloaded		
StOP	**[Stop]** (StOP): The Function blocks application is stopped		
In It	**[Init]** (In It): Check coherency between ATVLogic program and Function blocks parameters		
rUn	**[Run]** (rUn): The Function blocks application is running		
Err	**[Error]** (Err): An internal error has been detected. The Function blocks application is in fault state mode.		
FbFt	**[FB Fault]**		
nO	**[No]** (nO): No detected fault		
Int	**[Internal]** (Int): Internal detected error		
b In	**[Binary file]** (b In): Binary file corrupted		
InP	**[Intern Para.]** (InP): Internal parameter detected error		
PAr	**[Para. RW]** (PAr): Parameter access detected error		
CAL	**[Calculation]** (CAL): Calculation detected error		
tOAU	**[TO AUX]** (tOAU): TimeOut AUX task		
tOPP	**[TO synch]** (tOPP): TimeOut in PRE/POST task		
AdL	**[Bad ADLC]** (AdL): ADLC with bad parameter		
In	**[Input assig.]** (In): Input not configured		
FbI-	**[FB IDENTIFICATION]**		
bUEr ★	**[Program version]** Program user version.	0 to 255	-
bnS ★	**[Program size]** Program file size.	0 to 65,535	-
bnU	**[Prg. format version]** Binary format version of the drive.	0 to 255	-
CtU	**[Catalog version]** Catalog version of the drive.	0 to 65,535	-
FbM-	**[FUNCTION BLOCKS] (continued)**		
FbCd	**[FB Command]** Allows to start and stop the function blocks manually. **[FB Command]** (FbCd) is forced to **[Stop]** (StOP) if there is no valid function blocks application in the drive memory. **[FB Command]** (FbCd) is set to **[Start]** (Strt) when the function blocks application switch to Run according to **[FB start mode]** (FbrM) configuration. **Note:** As soon as the function blocks are started, the drive is considered as in running state and the modification of configuration parameters is no longer possible. StOP **[Stop]** (StOP): Function blocks application Stop command Strt **[Start]** (Strt): Function blocks application Start command		

Parameters described in this page can be accessed by: DRI- > CONF > FULL > FBM- > FBP-

Code	Name / Description	Adjustment range	Factory setting
FbrM	**[FB start mode]**		**[No]** (nO)
2 s	**⚠ DANGER** **UNINTENDED EQUIPMENT OPERATION** Start mode value will allow the start of the program by the selected channel. Check that this configuration will not endanger personnel or equipment in any way. **Failure to follow these instructions will result in death or serious injury.** Allows to choose the different ways of starting the Function blocks application. **Note:** Modifications of this parameter are not taken into account if the Function blocks application is running. nO **[No]** (nO): Function blocks application is controlled by **[FB command]** (FbCd) parameter YES **[Yes]** (YES): Function blocks application switches to Run automatically at drive power on LI1 **[LI1]** (LI1): Function blocks application switches to Run on a rising edge of the logic input. It switch to Stop on falling edge of the logic input. ... **[...]** (...): See the assignment conditions on page 150 (not **[OL10]** (OL01) to **[OL10]** (OL10)).		
FbSM	**[Stop FB Stop motor]**		**[Freewheel]** (YES)
	⚠ WARNING **LOSS OF CONTROL** If **[Stop FB stop motor]** (FbSM) is set to **[No]** (nO) the motor will not stop when the program will be stopped. Do not select these values unless exterior stopping methods exist. **Failure to follow these instructions can result in death, serious injury, or equipment damage.** Allows to setup the way of working of the drive when function blocks are stopped. nO **[Ignore]** (nO): The drive ignores the detected fault YES **[Freewheel]** (YES): Motor stops in freewheel rMP **[Ramp stop]** (rMP): Ramp stop FSt **[Fast stop]** (FSt): Fast stop dCI **[DC injection]** (dCI): DC injection		
FbdF	**[FB on drive fault]**		**[Stop]** (StOP)
	Behavior of function blocks when the drive trips. StOP **[Stop]** (StOP): Function blocks stops when the drive trips, outputs are realeased IGn **[Ignore]** (IGn): Function blocks continue to work when the drive trips (except CFF and INFE)		
FbA-	**[INPUTS ASSIGNMENTS]**		
IL01	**[Logic input 1 assignment]**		**[No]** (nO)
	Possible assignment for the Function block logic input. nO **[No]** (nO): Not assigned FLt **[No drive flt]** (FLt): Drive fault detection status (relay normally energized, and de-energized if there is a trip) FtA **[Freq. Th. attain.]** (FtA): Frequency threshold attained (**[Freq. threshold]** (Ftd) page 99) F2A **[Freq. Th. 2 attained]** (F2A): Frequency threshold 2 attained (**[Freq. threshold 2]** (F2d) page 99) Fr1 **[Ref.1 channel]** (Fr1) Reference source 1 Fr2 **[Ref.2 channel]** (Fr2) Reference source 2 Cd1 **[ch1 active]** (Cd1): Command channel = channel 1 (for [Cmd switching] (CSS)) Cd2 **[ch2 active]** (Cd2): Command channel = channel 2 (for [Cmd switching] (CSS)) Fr1b **[Ref.1B channel]** (Fr1b): Reference channel = channel 1b (for [Ref. 2 switching] (rFC)) YES **[Yes]** (YES): Yes LI1 **[LI1]** (LI1): Logical input LI1 ... **[...]** (...): See the assignment conditions on page 150		
IL--	**[Logic input x assignment]**		**[No]** (nO)
	All the Function Blocks logic inputs available on the drive are processed as in the example for **[Logic input 1 assignment]** (IL01) above, up to **[Logic input 10 assignment]** (IL10).		

Code	Name / Description	Adjustment range	Factory setting
IA01	**[Analog input 1 assignment]** Possible assignment for the Function block analog input. nO **[No]** (nO): Not assigned AI1 **[AI1]** (AI1): Analog input A1 AI2 **[AI2]** (AI2): Analog input A2 AI3 **[AI3]** (AI3): Analog input A3 OCr **[I motor]** (OCr): Motor current OFr **[Motor freq.]** (OFr): Motor speed OrP **[Ramp. out]** (OrP): Ramp output trq **[Motor torq.]** (trq): Motor torque Stq **[Sign torque]** (Stq): Signed motor torque OrS **[Sign ramp]** (OrS): Signed ramp output OPS **[PID ref.]** (OPS): PI(D) reference OPF **[PID feedbk]** (OPF): PI(D) feedback OPE **[PID error]** (OPE): PI(D) error OPI **[PID output]** (OPI): PI(D) integral OPr **[Mot. power]** (OPr): Motor power tHr **[Mot. thermal]** (tHr): Motor thermal state tHd **[Drv thermal]** (tHd): Drive thermal state tqnS **[Torque 4Q]** (tqnS): Signed motor torque UPdt **[+/-Speed]** (UPdt): Up/Down function is assigned by Lix UPdH **[+/-spd HMI]** (UPdH): Up/Down function is assigned by graphic display terminal or remote display terminal LCC **[HMI]** (LCC): Graphic display terminal or remote display terminal source Mdb **[Modbus]** (Mdb): Integrated Modbus CAn **[CANopen]** (CAn): Integrated CANopen® nEt **[Com. card]** (nEt): Communication option board source OFS **[Sig. o/p frq.]** (OFS): Signed output frequency tHr2 **[Mot therm2]** (tHr2): Motor 2 thermal state tHr3 **[Mot therm3]** (tHr3): Motor 3 thermal state tqL **[Torque lim.]** (tqL): Torque limitation UOP **[Motor volt.]** (UOP): Motor voltage PI **[RP]** (PI): Pulse input AIU1 **[AI virtual 1]** (AIU1): Virtual analog input 1 with the jog dial dO1 **[DO1]** (dO1): Analog/logical output DO1 AIU2 **[AI virtual 2]** (AIU2): Virtual analog input 2 by the communication bus OAO1 **[OA01]** (OAO1): Function blocks: Analog Output 01 ... OA10 **[OA10]** (OA10): Function blocks: Analog Output 10		**[No]** (nO)
IA--	**[Analog input x assignment]** All the Function blocks analog inputs available on the drive are processed as in the example for **[IA01]** (IA01) above, up to **[IA10]** (IA10).		**[No]** (nO)
FbM-	**[FUNCTION BLOCKS] (continued)**		
FAd-	**[ADL CONTAINERS]** ADL containers contain Modbus logical adress of internal parameters of the drive. If the chosen adress is valid, the display shows the parameter name instead of the adress.		
LAO1	ADL Container 01	3,015 to 64,299	0
LAO2	ADL Container 02	3,015 to 64,299	0
LAO3	ADL Container 03	3,015 to 64,299	0
LAO4	ADL Container 04	3,015 to 64,299	0
LAO5	ADL Container 05	3,015 to 64,299	0
LAO6	ADL Container 06	3,015 to 64,299	0
LAO7	ADL Container 07	3,015 to 64,299	0
LAO8	ADL Container 08	3,015 to 64,299	0

Code	Name / Description	Adjustment range	Factory setting
FbM-	**[FUNCTION BLOCKS] (continued)**		
FbP-	**[FB PARAMETERS]** Internal parameters available for the user program.		
M001 (1)	[ ] M001 Parameter saved in EEprom.	0 to 65,535	0
M002 (1)	[ ] M002 Parameter saved in EEprom	0 to 65,535	0
M003 (1)	[ ] M003 Parameter saved in EEprom	0 to 65,535	0
M004 (1)	[ ] M004 Parameter saved in EEprom	0 to 65,535	0
M005 (1)	[ ] M005 Parameter written in RAM	0 to 65,535	0
M006 (1)	[ ] M006 Parameter written in RAM	0 to 65,535	0
M007 (1)	[ ] M007 Parameter written in RAM	0 to 65,535	0
M008 (1)	[ ] M008 Parameter written in RAM	0 to 65,535	0

(1) If a graphic display terminal is not in use, values greater than 9,999 will be displayed on the 4-digit display with a period mark after the thousand digit, for example, 15.65 for 15,650.

★ These parameters only appear if the corresponding function has been selected in another menu. When the parameters can also be accessed and adjusted from within the configuration menu for the corresponding function, their description is detailed in these menus, on the pages indicated, to aid programming.

Parameter that can be modified during operation or when stopped.

2 s To change the assignment of this parameter, press the ENT key for 2 s.

[APPLICATION FUNCT.] (FUn-)

Summary of functions:

Code	Name	Page
(rEF-)	[REFERENCE SWITCH.]	164
(OAI-)	[REF. OPERATIONS]	165
(rPt-)	[RAMP]	167
(Stt-)	[STOP CONFIGURATION]	170
(AdC-)	[AUTO DC INJECTION]	173
(JOG-)	[JOG]	175
(PSS-)	[PRESET SPEEDS]	178
(UPd)	[+/- SPEED]	182
(SrE-)	[+/-SPEED AROUND REF.]	184
(SPM-)	[MEMO REFERENCE]	185
(FLI-)	[FLUXING BY LI]	186
(bLC-)	[BRAKE LOGIC CONTROL]	191
(ELM-)	[EXTERNAL WEIGHT MEAS.]	197
(HSH-)	[HIGH SPEED HOISTING]	202
(PId-)	[PID REGULATOR]	207
(PrI-)	[PID PRESET REFERENCES]	211
(tOL-)	[TORQUE LIMITATION]	213
(CLI-)	[2nd CURRENT LIMIT.]	215
(I2t-)	[DYN CURRENT LIMIT]	216
(LLC-)	[LINE CONTACTOR COMMAND]	218
(OCC-)	[OUTPUT CONTACTOR CMD]	220
(LPO-)	[POSITIONING BY SENSORS]	224
(MLP-)	[PARAM. SET SWITCHING]	227
(MMC-)	[MULTIMOTORS/CONFIG.]	232
(tnL-)	[AUTO TUNING BY LI]	233
(trO-)	[TRAVERSE CONTROL]	234
(CHS-)	[HSP SWITCHING]	241
(dCC-)	[DC BUS]	242

The parameters in the **[APPLICATION FUNCT.]** (Fun-) menu can only be modified when the drive is stopped and there is no run command, except for parameters with a ( ) symbol in the code column, which can be modified with the drive running or stopped.

Note: Compatibility of functions

The choice of application functions may be limited by the number of I/O and by the fact that some functions are incompatible with others. Functions that are not listed in the table below are fully compatible.

If there is an incompatibility between functions, the first function configured will help to prevent the others being configured.

Each of the functions on the following pages can be assigned to one of the inputs or outputs.

⚠ DANGER

UNINTENDED EQUIPMENT OPERATION
A single input can activate several functions at the same time (reverse and 2nd ramp for example).
Ensure that these functions can be used at the same time.
Failure to follow these instructions will result in death or serious injury.

It is only possible to assign one input to several functions at **[Advanced]** (AdU) and **[Expert]** (EPr) levels.

Before assigning a command, reference or function to an input or output, the user must check that this input or output has not already been assigned and that another input or output has not been assigned to an incompatible function.

The drive factory setting or macro configurations automatically configure functions, **which may help to prevent other functions being assigned.**

In some case, it is necessary to unconfigure one or more functions in order to be able to enable another. Check the compatibility table below.

Stop functions have priority over run commands.

Speed references via logic command have priority over analog references.

Note: This compatibility table does not affect commands that can be assigned to the keys of the graphic display terminal (see page 24).

Parameters described in this page can be accessed by: DRI- > CONF > FULL > REF-

Compatibility table

	Reference operations (page 165)	+/- speed (3) (page 182)	Preset speeds (page 177)	PID regulator (page 207)	Traverse control (page 239)	JOG operation (page 175)	Reference switching (page 164)	Skip frequency (page 179)	Brake logic control (page 191)	Auto DC injection (page 173)	Catch on the fly (page 250)	Output contactor command (page 220)	DC injection stop (page 170)	Fast stop (page 170)	Freewheel stop (page 170)	+/- speed around a reference (page 184)	High speed hoisting (page 202)	Load sharing (page 119)	Positioning by sensors (page 224)
Reference operations (page 165)			↑	● (2)		↑	↑	↑											
+/- speed (3) (page 182)					●	●	↑	↑											
Preset speeds (page 177)	←					↑	↑	↑											
PID regulator (page 207)	● (2)				●	●	↑	↑	●							●	●	●	●
Traverse control (page 239)		●		●		●	↑	↑								●	●		
JOG operation (page 175)	←	●	←	●	●			↑	●	←						●	●		
Reference switching (page 164)	←	←	←	←	←			↑								↑			
Skip frequency (page 179)	←	←	←	←	←	←	←									←			
Brake logic control (page 191)				●		●					●	●	●						
Auto DC injection (page 173)						↑							↑		↑				
Catch on the fly (page 250)									●										
Output contactor command (page 220)									●										
DC injection stop (page 170)									●	←				● (1)	↑				
Fast stop (page 170)													● (1)		↑				
Freewheel stop (page 170)										←			←	←					
+/- speed around a reference (page 184)				●	●	●	←	↑											
High speed hoisting (page 202)				●	●	●													
Load sharing (page 119)				●															
Positioning by sensors (page 224)				●															

(1) Priority is given to the first of these two stop modes to be activated.
(2) Only the multiplier reference is incompatible with the PID regulator.

● Incompatible functions Compatible functions Not applicable

Priority functions (functions which cannot be active at the same time):

← ↑ The function indicated by the arrow has priority over the other.

Parameters described in this page can be accessed by: DRI- > CONF > FULL > FUN- > OAI-

Incompatible Functions

The following function will be inaccessible or deactivated after an Automatic restart.
This is only possible for control type if **[2/3 wire control]** (tCC) is set to **[2 wire]** (2C) and if **[2 wire type]** (tCt) is set to **[Level]** (LEL) or **[Fwd priority]** (PFO). See **[2/3 wire control]** (tCC) page 83.

The **[1.2 MONITORING]** (MON-) menu page 45 can be used to display the functions assigned to each input in order to check their compatibility.

When a function is assigned, a ✓ appears on the graphic display terminal, as illustrated in the example below:

```
RDY        Term     0.0Hz     0A
        APPLICATION FUNCT.
REFERENCE SWITCH.
REF. OPERATIONS
RAMP
STOP CONFIGURATION
AUTO DC INJECTION
 Code        <<        >>      Quick
```

If you attempt to assign a function that is incompatible with another function that has already been assigned, an alarm message will appear:

- With the graphic display terminal:

```
RDY        Term     +0.0 Hz    0.0 A
        INCOMPATIBILITY
The function can't be assigned
because an incompatible
function is already selected. See
programming book.
ENT or ESC to continue
```

- With the integrated display terminal and the remote display terminal:

COMP flashes until ENT or ESC is pressed.

When you assign a logic input, an analog input, a reference channel or a bit to a function, pressing the HELP key will display the functions that may already have been activated by this input, bit or channel.

When a logic input, an analog input, a reference channel or a bit that has already been assigned is assigned to another function, the following screens appear:

- With the graphic display terminal:

```
RUN        Term     0.0 Hz     0.0 A
        WARNING - ASSIGNED TO
Forward
 ENT-Valid.          ESC-Abort
```

If the access level permits this new assignment, pressing ENT confirms the assignment.

If the access level does not permit this new assignment, pressing ENT results in the following display:

```
RUN        Term     0.0 Hz     0.0 A
        ASSIGNMENT FORBIDDEN
Un-assign the present
functions, or select
"Advanced" access level
```

- With the integrated display terminal:

The code for the first function, which is already assigned, is displayed flashing.

If the access level permits this new assignment, pressing ENT confirms the assignment.

If the access level does not permit this new assignment, pressing ENT has no effect, and the message continues to flash. It is only possible to exit by pressing ESC.

Parameters described in this page can be accessed by: DRI- > CONF > FULL > FUN- > OAI-

REFERENCE SWITCHING

Code	Name / Description	Adjustment range	Factory setting
FUn-	**[APPLICATION FUNCT.]**		
rEF-	**[REFERENCE SWITCH.]**		
rCb	**[Ref 1B switching]** See the diagrams on pages 144 and 145. If the assigned input or bit is at 0, **[Ref.1 channel]** (Fr1) is active (see **[Ref.1 channel]** (Fr1) page 151). If the assigned input or bit is at 1, **[Ref.1B channel]** (Fr1b) is active. **[Ref 1B switching]** (rCb) is forced to **[ch1 active]** (Fr1) if **[Profile]** (CHCF) is set to **[Not separ.]** (SIM) with **[Ref.1 channel]** (Fr1) assigned via the terminals (analog inputs, pulse input). See **[Ref.1 channel]** (Fr1) page 151. Fr1 **[ch1 active]** (Fr1): No switching, **[Ref.1 channel]** (Fr1) active Fr1b **[ch1B active]** (Fr1b): No switching, **[Ref.1B channel]** (Fr1b) active LI1 **[LI1]** (LI1): Logical input LI1 ... **[...]** (...): See the assignment conditions on page 150 (not **[Cd00]** (Cd00) to **[Cd15]** (Cd15)).		**[ch1 active]** (Fr1)
Fr1b	**[Ref.1B channel]** nO **[No]** (nO): Not assigned AI1 **[AI1]** (AI1): Analog input A1 AI2 **[AI2]** (AI2): Analog input A2 AI3 **[AI3]** (AI3): Analog input A3 LCC **[HMI]** (LCC): Graphic display terminal or remote display terminal source Mdb **[Modbus]** (Mdb): Integrated Modbus CAn **[CANopen]** (CAn): Integrated CANopen® nEt **[Com. card]** (nEt): Communication option board source PI **[RP]** (PI): Pulse input AIU1 **[AI virtual 1]** (AIU1): Virtual analog input 1 with the jog dial (only available if **[Profile]** (CHCF) is not set to **[Not separ.]** (SIM)) OAO1 **[OA01]** (OAO1): Function blocks: Analog Output 01 ... **...** OA10 **[OA10]** (OA10): Function blocks: Analog Output 10		**[No]** (nO)

Parameters described in this page can be accessed by: DRI- > CONF > FULL > FUN- > RPT-

REFERENCE OPERATIONS

Summing input / Subtracting input / Multiplier

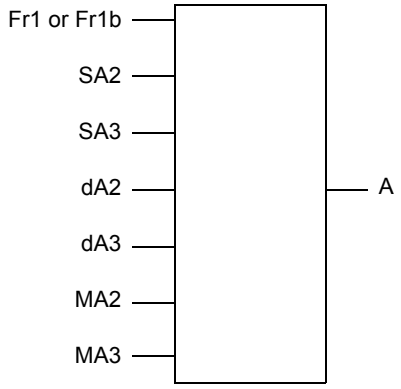

A = (Fr1 or Fr1b + SA2 + SA3 - dA2 - dA3) x MA2 x MA3

- If SA2, SA3, dA2, dA3 are not assigned, they are set to 0.
- If MA2, MA3 are not assigned, they are set to 1.
- A is limited by the minimum LSP and maximum HSP parameters.
- For multiplication, the signal on MA2 or MA3 is interpreted as a %. 100% corresponds to the maximum value of the corresponding input. If MA2 or MA3 is sent via the communication bus or graphic display terminal, an MFr multiplication variable, page 282 must be sent via the bus or graphic display terminal.
- Reversal of the direction of operation in the event of a negative result can be inhibited (see **[RV Inhibition]** (SIn) page 151).

Code	Name / Description	Adjustment range	Factory setting
FUn-	**[APPLICATION FUNCT.] (continued)**		
OAI-	**[REF. OPERATIONS]** Reference = (Fr1 or Fr1b + SA2 + SA3 - dA2 - dA3) x MA2 x MA3. See the diagrams on pages 144 and 145. **Note:** This function cannot be used with certain other functions. Follow the instructions on page 160.		
SA2	**[Summing ref. 2]** Selection of a reference to be added to **[Ref.1 channel]** (Fr1) or **[Ref.1B channel]** (Fr1b). nO **[No]** (nO): Not assigned AI1 **[AI1]** (AI1): Analog input A1 AI2 **[AI2]** (AI2): Analog input A2 AI3 **[AI3]** (AI3): Analog input A3 LCC **[HMI]** (LCC): Graphic display terminal or remote display terminal source Mdb **[Modbus]** (Mdb): Integrated Modbus CAn **[CANopen]** (CAn): Integrated CANopen® nEt **[Com. card]** (nEt): Communication option board source PI **[RP]** (PI): Motor voltage AIU1 **[AI virtual 1]** (AIU1): Virtual analog input 1 with the jog dial AIU2 **[AI virtual 2]** (AIU2): Virtual analog input 2 by the communication bus OAO1 **[OA01]** (OAO1): Function blocks: Analog Output 01 . . . **...** OA10 **[OA10]** (OA10): Function blocks: Analog Output 10		**[No]** (nO)
SA3	**[Summing ref. 3]** Selection of a reference to be added to **[Ref.1 channel]** (Fr1) or **[Ref.1B channel]** (Fr1b). Identical to **[Summing ref. 2]** (SA2) page 165.		**[No]** (nO)
dA2	**[Subtract. ref. 2]** Selection of a reference to be subtracted from **[Ref.1 channel]** (Fr1) or **[Ref.1B channel]** (Fr1b). Identical to **[Summing ref. 2]** (SA2) page 165.		**[No]** (nO)

Parameters described in this page can be accessed by: DRI- > CONF > FULL > FUN- > RPT-

Code	Name / Description	Adjustment range	Factory setting
dA3	**[Subtract. ref. 3]** Selection of a reference to be subtracted from **[Ref.1 channel]** (Fr1) or **[Ref.1B channel]** (Fr1b). Identical to **[Summing ref. 2]** (SA2) page 165.		**[No]** (nO)
MA2	**[Multiplier ref. 2]** Selection of a multiplier reference **[Ref.1 channel]** (Fr1) or **[Ref.1B channel]** (Fr1b). Identical to **[Summing ref. 2]** (SA2) page 165.		**[No]** (nO)
MA3	**[Multiplier ref. 3]** Selection of a multiplier reference **[Ref.1 channel]** (Fr1) or **[Ref.1B channel]** (Fr1b). Identical to **[Summing ref. 2]** (SA2) page 165.		**[No]** (nO)

Parameters described in this page can be accessed by: DRI- > CONF > FULL > FUN- > RPT-

RAMP

Code	Name / Description	Adjustment range	Factory setting
FUn-	**[APPLICATION FUNCT.] (continued)**		
rPt-	**[RAMP]**		
rPt L In S U CUS (1)	**[Ramp type]** **[Linear]** (L In) **[S ramp]** (S) **[U ramp]** (U) **[Customized]** (CUS) S ramps 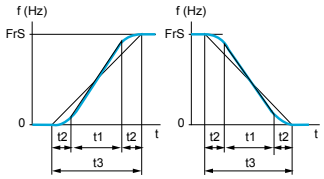 The rounding coefficient is fixed, t1 = 0.6 set ramp time (linear) t2 = 0.4 set ramp time (round) t3 = 1.4 set ramp time U ramps 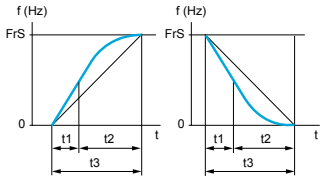 The rounding coefficient is fixed, t1 = 0.5 set ramp time (linear) t2 = 1.0 set ramp time (round) t3 = 1.5 set ramp time Customized ramps 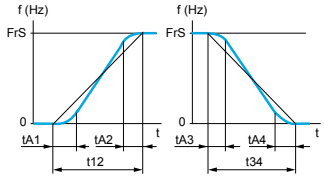 tA1: adjustable from 0 to 100% tA2: adjustable from 0 to (100% - tA1) tA3: adjustable from 0 to 100% tA4: adjustable from 0 to (100% - tA3) t12 = ACC * (tA1(%) / 100 + tA2(%) / 100 + 1) t34 = DEC * (tA3(%) / 100 + tA4(%) / 100 + 1)		**[Linear]** (L In)
Inr (1) 0.01 0.1 1	**[Ramp increment]** This parameter is valid for **[Acceleration]** (ACC), **[Deceleration]** (dEC), **[Acceleration 2]** (AC2) and **[Deceleration 2]** (dE2). **[0,01]**: Ramp up to 99.99 seconds **[0,1]**: Ramp up to 999.9 seconds **[1]**: Ramp up to 6,000 seconds		**[0,1]** (0.1)
ACC (1)	**[Acceleration]** Time to accelerate from 0 to the **[Rated motor freq.]** (FrS) (page 84). To have repeatability in ramps, the value of this parameter must be set according to the possibility of the application.	0.00 to 6,000 s (2)	3.0 s
dEC (1)	**[Deceleration]** Time to decelerate from the **[Rated motor freq.]** (FrS) (page 84) to 0. To have repeatability in ramps, the value of this parameter must be set according to the possibility of the application.	0.00 to 6,000 s (2)	3.0 s
tA1 ★ (1)	**[Begin Acc round]** Rounding of start of acceleration ramp as a % of the **[Acceleration]** (ACC) or **[Acceleration 2]** (AC2) ramp time. Can be set between 0 and 100%. This parameter can be accessed if the **[Ramp type]** (rPt) is **[Customized]** (CUS).	0 to 100%	10%

Parameters described in this page can be accessed by: DRI- > CONF > FULL > FUN- > STT-

Code	Name / Description	Adjustment range	Factory setting
tA2 ★ (1)	**[End Acc round]** Rounding of end of acceleration ramp as a % of the **[Acceleration]** (ACC) or **[Acceleration 2]** (AC2) ramp time. Can be set between 0 and (100% - **[Begin Acc round]** (tA1)). This parameter can be accessed if the **[Ramp type]** (rPt) is **[Customized]** (CUS).	0 to 100%	10%
tA3 ★ (1)	**[Begin Dec round]** Rounding of start of deceleration ramp as a % of the **[Deceleration]** (dEC) or **[Deceleration 2]** (dE2) ramp time. Can be set between 0 and 100%. This parameter can be accessed if the **[Ramp type]** (rPt) is **[Customized]** (CUS).	0 to 100%	10%
tA4 ★ (1)	**[End Dec round]** Rounding of end of deceleration ramp as a % of the **[Deceleration]** (dEC) or **[Deceleration 2]** (dE2) ramp time. Can be set between 0 and (100% - **[Begin Dec round]** (tA3)). This parameter can be accessed if the **[Ramp type]** (rPt) is **[Customized]** (CUS).	0 to 100%	10%
Frt	**[Ramp 2 threshold]** Ramp switching threshold The 2nd ramp is switched if the value of **[Ramp 2 threshold]** (Frt) is not 0 (0 deactivates the function) and the output frequency is greater than **[Ramp 2 threshold]** (Frt). Threshold ramp switching can be combined with **[Ramp switch ass.]** (rPS) switching as follows:	0 to 599 Hz according to rating	0 Hz

LI or bit	Frequency	Ramp
0	< Frt	ACC, dEC
0	> Frt	AC2, dE2
1	< Frt	AC2, dE2
1	> Frt	AC2, dE2

rPS	**[Ramp switch ass.]** Identical to **[Ref.1B channel]** (Fr1b) page 164.		**[No]** (nO)
AC2 ★ (1)	**[Acceleration 2]** Time to accelerate from 0 to the **[Rated motor freq.]** (FrS). To have repeatability in ramps, the value of this parameter must be set according to the possibility of the application. This parameter can be accessed if **[Ramp 2 threshold]** (Frt) is greater than 0 or if **[Ramp switch ass.]** (rPS) is assigned.	0.00 to 6,000 s (2)	5.0 s
dE2 ★ (1)	**[Deceleration 2]** Time to decelerate from **[Rated motor freq.]** (FrS) to 0. To have repeatability in ramps, the value of this parameter must be set according to the possibility of the application. This parameter can be accessed if **[Ramp 2 threshold]** (Frt) is greater than 0 or if **[Ramp switch ass.]** (rPS) is assigned.	0.00 to 6,000 s (2)	5.0 s

Parameters described in this page can be accessed by: DRI- > CONF > FULL > FUN- > STT-

Code	Name / Description	Adjustment range	Factory setting
brA	**[Dec ramp adapt.]**		**[Yes]** (YES)

CAUTION

RISK OF DAMAGE TO THE MOTOR
Choose only **[Dec ramp adapt.]** (brA) = **[Yes]** (YES) or **[No]** (nO) if the motor is a permanent magnet synchronous motor, otherwise it will be demagnetized.
Failure to follow these instructions can result in equipment damage.

Activating this function automatically adapts the deceleration ramp, if this has been set at a too low value according to the inertia of the load, which can cause an overvoltage detected fault.
[Dec ramp adapt.] (brA) is forced to **[No]** (nO) if the brake logic control **[Brake assignment]** (bLC) is assigned (page 191).
The function is incompatible with applications requiring:
- Positioning on a ramp.
- The use of a braking resistor (the resistor would not operate correctly).

nO **[No]** (nO): Function inactive
YES **[Yes]** (YES): Function active, for applications that do not require strong deceleration
The following selections appear depending on the rating of the drive and **[Motor control type]** (Ctt) page 102. They enable stronger deceleration to be obtained than with **[Yes]** (YES). Use comparative testing to determine your selection.
dYnA **[High torq. A]** (dYnA): Addition of a constant current flow component.
When **[Dec ramp adapt.]** (brA) is configured on **[High torq. x]** (dYnx), the dynamic performances for braking are improved by the addition of a current flow component. The aim is to increase the iron loss and magnetic energy stored in the motor.

(1) The parameter can also be accessed in the **[SETTINGS]** (SEt-) menu.
(2) Range 0.01 to 99.99 s or 0.1 to 999.9 s or 1 to 6,000 s according to **[Ramp increment]** (Inr) page 167.

★ These parameters only appear if the corresponding function has been selected in another menu. When the parameters can also be accessed and adjusted from within the configuration menu for the corresponding function, their description is detailed in these menus, on the pages indicated, to aid programming.

Parameter that can be modified during operation or when stopped.

Parameters described in this page can be accessed by: DRI- > CONF > FULL > FUN- > STT-

STOP CONFIGURATION

Code	Name / Description	Adjustment range	Factory setting
FUn-	**[APPLICATION FUNCT.] (continued)**		
Stt-	**[STOP CONFIGURATION]** **Note:** Some types of stops cannot be used with all other functions. Follow the instructions on page 160.		
Stt	**[Type of stop]** Stop mode on disappearance of the run command or appearance of a stop command. **Note:** If the "brake logic" function on page 191 has been enabled, or if **[Low speed time out]** (tLS) page 93 or 210 is not 0, only ramp type stops may be configured. rMP **[Ramp stop]** (rMP): Stop on ramp FSt **[Fast stop]** (FSt): Fast stop nSt **[Freewheel]** (nSt): Freewheel stop dCI **[DC injection]** (dCI): DC injection stop. Available only if **[Motor control type]** (Ctt) page 102 is not set to **[Sync. mot.]** (SYn).		**[Ramp stop]** (rMP)
FFt ★ (1)	**[Freewheel stop Thd.]** Speed threshold below which the motor will switch to freewheel stop. This parameter supports switching from a ramp stop or a fast stop to a freewheel stop below a low speed threshold. This parameter can be accessed if **[Type of stop]** (Stt) is set to **[Fast stop]** (FSt) or **[Ramp stop]** (rMP) and if **[Brake assignment]** (bLC) or **[Auto DC injection]** (AdC) are configured.	0.2 to 599 Hz	0.2 Hz
nSt	**[Freewheel stop ass.]** The stop is activated when the input or the bit changes to 0. If the input returns to state 1 and the run command is still active, the motor will only restart if **[2/3 wire control]** (tCC) page 83 is set to **[2 wire]** (2C) and if **[2 wire type]** (tCt) is set to **[Level]** (LEL) or **[Fwd priority]** (PFO). If not, a new run command must be sent. nO **[No]** (nO): Not assigned LI1 **[LI1]** (LI1): Logical input LI1 ... **[...]** (...): See the assignment conditions on page 150		**[No]** (nO)
FSt	**[Fast stop assign.]** The stop is activated when the input changes to 0 or the bit changes to 1 (bit in **[I/O profile]** (IO) at 0). If the input returns to state 1 and the run command is still active, the motor will only restart if **[2/3 wire control]** (tCC) page 83 is set to **[2 wire]** (2C) and if **[2 wire type]** (tCt) is set to **[Level]** (LEL) or **[Fwd priority]** (PFO). If not, a new run command must be sent. **Note:** This function cannot be used with certain other functions. Follow the instructions on page 160. nO **[No]** (nO): Not assigned LI1 **[LI1]** (LI1): Logical input LI1 ... **[...]** (...): See the assignment conditions on page 150		**[No]** (nO)
dCF ★ (1)	**[Ramp divider]** This parameter can be accessed if **[Type of stop]** (Stt) is set to **[Fast stop]** (FSt) and if **[Fast stop assign.]** (FSt) is not **[No]** (nO) and if **[Stop type]** (PAS) is set to **[Fast stop]** (FSt). The ramp that is enabled (**[Deceleration]** (dEC) or **[Deceleration 2]** (dE2)) is then divided by this coefficient when stop requests are sent. Value 0 corresponds to a minimum ramp time.	0 to 10	4

Parameters described in this page can be accessed by: DRI- > CONF > FULL > FUN- > ADC-

Code	Name / Description	Adjustment range	Factory setting
dCI	**[DC injection assign.]**		**[No]** (nO)

⚠WARNING

NO HOLDING TORQUE
- DC injection braking does not provide any holding torque at zero speed.
- DC injection braking does not work when there is a loss of power or when the drive detects a fault.
- Where necessary, use a separate brake to maintain torque levels.

Failure to follow these instructions can result in death, serious injury, or equipment damage.

DC injection braking is initiated when the assigned input or bit changes to state 1.
If the input returns to state 0 and the run command is still active, the motor will only restart if **[2/3 wire control]** (tCC) page 83 is set to **[2 wire]** (2C) and if **[2 wire type]** (tCt) is set to **[Level]** (LEL) or **[Fwd priority]** (PFO). If not, a new run command must be sent.
Note: This function cannot be used with certain other functions. Follow the instructions on page 160.

nO **[No]** (nO): Not assigned
LI1 **[LI1]** (LI1): Logical input LI1
... **[...]** (...): See the assignment conditions on page 150

Code	Name / Description	Adjustment range	Factory setting
IdC	**[DC inject. level 1]**	0.1 to 1.41 In (2)	0.64 In (2)

⚠WARNING

NO HOLDING TORQUE
- DC injection braking does not provide any holding torque at zero speed.
- DC injection braking does not work when there is a loss of power or when the drive detects a fault.
- Where necessary, use a separate brake to maintain torque levels.

Failure to follow these instructions can result in death, serious injury, or equipment damage.

★

(1) (3)

CAUTION

RISK OF DAMAGE TO THE MOTOR
Check that the motor will withstand this current without overheating.
Failure to follow these instructions can result in equipment damage.

Level of DC injection braking current activated via logic input or selected as stop mode.
This parameter can be accessed if **[Type of stop]** (Stt) is set to **[DC injection]** (dCI) or if **[DC injection assign.]** (dCI) is not **[No]** (nO).

Code	Name / Description	Adjustment range	Factory setting
tdI	**[DC injection time 1]**	0.1 to 30 s	0.5 s

CAUTION

RISK OF DAMAGE TO THE MOTOR
- Long periods of DC injection braking can cause overheating and damage the motor.
- Protect the motor by avoiding long periods of DC injection braking.

Failure to follow these instructions can result in equipment damage.

★

(1) (3)

Maximum current injection time **[DC inject. level 1]** (IdC). After this time, the injection current becomes **[DC inject. level 2]** (IdC2).
This parameter can be accessed if **[Type of stop]** (Stt) is set to **[DC injection]** (dCI) or if **[DC injection assign.]** (dCI) is not set to **[No]** (nO).

Parameters described in this page can be accessed by: DRI- > CONF > FULL > FUN- > ADC-

Code	Name / Description	Adjustment range	Factory setting
IdC2	**[DC inject. level 2]**	0.1 In (2) to **[DC inject. level 1]** (IdC)	0.5 In (2)
★ (1) (3)	**CAUTION** **RISK OF DAMAGE TO THE MOTOR** Check that the motor will withstand this current without overheating. **Failure to follow these instructions can result in equipment damage.** Injection current activated by logic input or selected as stop mode, once period of time **[DC injection time 1]** (tdI) has elapsed. This parameter can be accessed if **[Type of stop]** (Stt) is set to **[DC injection]** (dCI) or if **[DC injection assign.]** (dCI) is not set to **[No]** (nO).		
tdC	**[DC injection time 2]**	0.1 to 30 s	0.5 s
★ (1) (3)	**CAUTION** **RISK OF DAMAGE TO THE MOTOR** • Long periods of DC injection braking can cause overheating and damage the motor. • Protect the motor by avoiding long periods of DC injection braking. **Failure to follow these instructions can result in equipment damage.** Maximum injection time **[DC inject. level 2]** (IdC2) for injection, selected as stop mode only. This parameter can be accessed if **[Stop type]** (Stt) is set to **[DC injection]** (dCI).		
dOtd	**[Dis. operat opt code]**		**[Ramp stop]** (rMP)
nSt rMP	Disable operation stop mode. **[Freewheel]** (nSt): Disable drive function **[Ramp stop]** (rMP): Ramp stop then disable drive function		

(1) The parameter can also be accessed in the **[SETTINGS]** (SEt-) menu.
(2) In corresponds to the rated drive current indicated in the Installation manual and on the drive nameplate.
(3) These settings are independent of the **[AUTO DC INJECTION]** (AdC-) function.

★ These parameters only appear if the corresponding function has been selected in another menu. When the parameters can also be accessed and adjusted from within the configuration menu for the corresponding function, their description is detailed in these menus, on the pages indicated, to aid programming.

Parameter that can be modified during operation or when stopped.

Parameters described in this page can be accessed by: DRI- > CONF > FULL > FUN- > JOG-

AUTO DC INJECTION

Code	Name / Description	Adjustment range	Factory setting
FUn-	**[APPLICATION FUNCT.] (continued)**		
AdC-	**[AUTO DC INJECTION]**		
AdC	**[Auto DC injection]**		[Yes] (YES)

⚠⚠DANGER

HAZARD OF ELECTRIC SHOCK, EXPLOSION OR ARC FLASH
When **[Auto DC injection]** (AdC) is set to **[Continuous]** (Ct), the injection of current is done even if a run command has not been sent.
Check this action will not endanger personnel or equipment in any way.
Failure to follow these instructions will result in death or serious injury.

2 s

⚠WARNING

NO HOLDING TORQUE
• DC injection braking does not provide any holding torque at zero speed.
• DC injection braking does not work when there is a loss of power or when the drive detects a fault.
• Where necessary, use a separate brake to maintain torque levels.
Failure to follow these instructions can result in death, serious injury, or equipment damage.

Automatic current injection on stopping (at the end of the ramp).
Note: There is an interlock between this function and **[Motor fluxing]** (FLU) page 93. If **[Motor fluxing]** (FLU) is set to **[Continuous]** (FCt), **[Auto DC injection]** (AdC) must be **[No]** (nO).
Note: **[Auto DC injection]** (AdC) is set to **[No]** (nO) when **[Motor control type]** (Ctt) page 102 is set to **[Sync. mot.]** (SYn).
[Auto DC injection] (AdC) is forced to **[No]** (nO) when **[Brake assignment]** (bLC) page 191 is not set to **[No]** (nO).
This parameter gives rise to the injection of current even if a run command has not been sent. It can be accessed with the drive running.

nO **[No]** (nO): No injection
YES **[Yes]** (YES): Adjustable injection time
Ct **[Continuous]** (Ct): Continuous standstill injection

SdC1	**[Auto DC inj. level 1]**	0 to 1.2 In (2)	0.7 In (2)

★ (1)

CAUTION

RISK OF DAMAGE TO THE MOTOR
Check that the motor will withstand this current without overheating.
Failure to follow these instructions can result in equipment damage.

Level of standstill DC injection current **[Auto DC injection]** (AdC) is not **[No]** (nO).

tdC1	**[Auto DC inj. time 1]**	0.1 to 30 s	0.5 s

★ (1)

CAUTION

RISK OF DAMAGE TO THE MOTOR
• Long periods of DC injection braking can cause overheating and damage the motor.
• Protect the motor by avoiding long periods of DC injection braking.
Failure to follow these instructions can result in equipment damage.

Standstill injection time. This parameter can be accessed if **[Auto DC injection]** (AdC) is not set to **[No]** (nO).
If **[Motor control type]** (Ctt) page 102 is set to **[Sync. mot.]**(SYn), this time corresponds to the zero speed maintenance time.

Parameters described in this page can be accessed by: DRI- > CONF > FULL > FUN- > JOG-

Code	Name / Description	Adjustment range	Factory setting
SdC2	**[Auto DC inj. level 2]**	0 to 1.2 In (2)	0.5 In (2)

★ (1)

CAUTION

RISK OF DAMAGE TO THE MOTOR
Check that the motor will withstand this current without overheating.
Failure to follow these instructions can result in equipment damage.

2nd level of standstill DC injection current.
This parameter can be accessed if **[Auto DC injection]** (AdC) is not **[No]** (nO).

Code	Name / Description	Adjustment range	Factory setting
tdC2	**[Auto DC inj. time 2]**	0 to 30 s	0 s

★ (1)

CAUTION

RISK OF DAMAGE TO THE MOTOR
• Long periods of DC injection braking can cause overheating and damage the motor.
• Protect the motor by avoiding long periods of DC injection braking.
Failure to follow these instructions can result in equipment damage.

2nd standstill injection time.
This parameter can be accessed if **[Auto DC injection]** (AdC) is set to **[Yes]** (YES).

AdC	SdC2	Operation
YES	x	
Ct	≠ 0	
Ct	= 0	
Run command		
Speed		

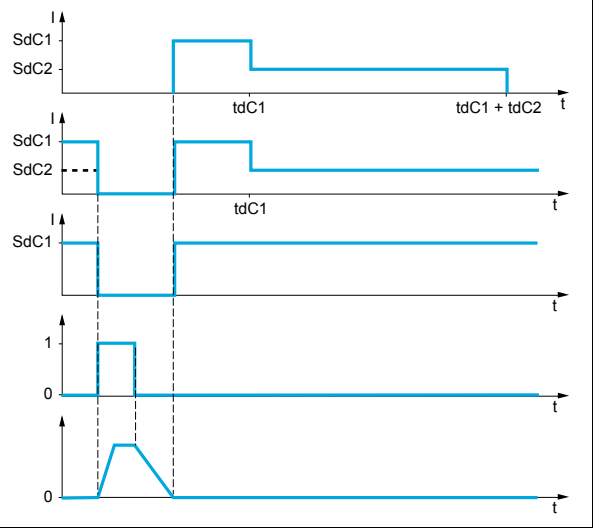

(1) The parameter can also be accessed in the **[SETTINGS]** (SEt-) menu.
(2) In corresponds to the rated drive current indicated in the Installation manual and on the drive nameplate.

★ These parameters only appear if the corresponding function has been selected in another menu. When the parameters can also be accessed and adjusted from within the configuration menu for the corresponding function, their description is detailed in these menus, on the pages indicated, to aid programming.

Parameter that can be modified during operation or when stopped.

2 s To change the assignment of this parameter, press the ENT key for 2 s.

JOG

Code	Name / Description	Adjustment range	Factory setting
FUn-	**[APPLICATION FUNCT.] (continued)**		
JOG-	**[JOG]** **Note:** This function cannot be used with certain other functions. Follow the instructions on page 160.		
JOG	**[JOG]** Pulse operation. The JOG function is only active if the command channel and the reference channels are on the terminals. The function is active when the assigned input or bit is at 1. Example: 2-wire control operation (tCC = 2C). 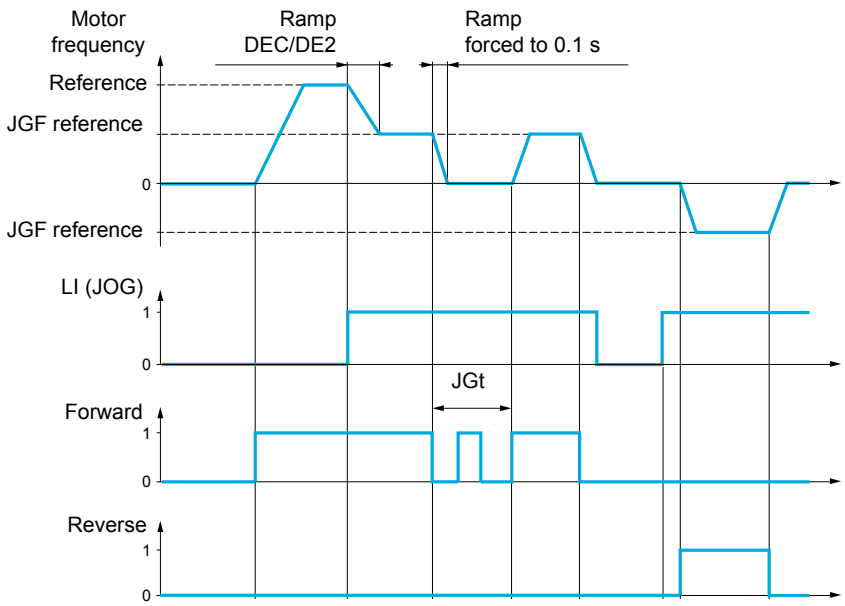 nO **[No]** (nO): Not assigned LI1 **[LI1]** (LI1): Logical input LI1 ... **[...]** (...): See the assignment conditions on page 150 (not **[Cd00]** (Cd00) to **[Cd15]** (Cd15))		**[LI3]** (LI3)
JGF ★ (1)	**[Jog frequency]** Reference in jog operation. This parameter can be accessed if **[JOG]** (JOG) is not set to **[No]** (nO).	0 to 10 Hz	10 Hz

Parameters described in this page can be accessed by: DRI- > CONF > FULL > FUN- > PSS-

Code	Name / Description	Adjustment range	Factory setting
JGt ★ (1)	**[Jog delay]** Anti-repeat delay between 2 consecutive jog operations. This parameter can be accessed if **[JOG]** (JOG) is not set to **[No]** (nO).	0 to 2.0 s	0.5 s

(1) The parameter can also be accessed in the **[SETTINGS]** (SEt-) menu.

★ These parameters only appear if the corresponding function has been selected in another menu. When the parameters can also be accessed and adjusted from within the configuration menu for the corresponding function, their description is detailed in these menus, on the pages indicated, to aid programming.

Parameter that can be modified during operation or when stopped.

2 s To change the assignment of this parameter, press the ENT key for 2 s.

Parameters described in this page can be accessed by: DRI- > CONF > FULL > FUN- > PSS-

PRESET SPEEDS

2, 4, 8 or 16 speeds can be preset, requiring 1, 2, 3 or 4 logic inputs respectively.

Note:

You must configure 2 and 4 speeds in order to obtain 4 speeds.

You must configure 2, 4 and 8 speeds in order to obtain 8 speeds.

You must configure 2, 4, 8, and 16 speeds in order to obtain 16 speeds.

Combination table for preset speed inputs

16 speeds LI (PS16)	8 speeds LI (PS8)	4 speeds LI (PS4)	2 speeds LI (PS2)	Speed reference
0	0	0	0	Reference (1)
0	0	0	1	SP2
0	0	1	0	SP3
0	0	1	1	SP4
0	1	0	0	SP5
0	1	0	1	SP6
0	1	1	0	SP7
0	1	1	1	SP8
1	0	0	0	SP9
1	0	0	1	SP10
1	0	1	0	SP11
1	0	1	1	SP12
1	1	0	0	SP13
1	1	0	1	SP14
1	1	1	0	SP15
1	1	1	1	SP16

(1) See the diagram on page 144: Reference 1 = (SP1).

Parameters described in this page can be accessed by: DRI- > CONF > FULL > FUN- > PSS-

Code	Name / Description	Adjustment range	Factory setting
FUn -	**[APPLICATION FUNCT.] (continued)**		
PSS -	**[PRESET SPEEDS]** **Note:** This function cannot be used with certain other functions. Follow the instructions on page 160..		
PS2 nO LI1 ...	**[2 preset speeds]** **[No]** (nO): Not assigned **[LI1]** (LI1): Logical input LI1 **[...]** (...): See the assignment conditions on page 150		**[No]** (nO)
PS4	**[4 preset speeds]** Identical to **[2 preset speeds]** (PS2) page 178. To obtain 4 speeds, you must also configure 2 speeds.		**[No]** (nO)
PS8	**[8 preset speeds]** Identical to **[2 preset speeds]** (PS2) page 178. To obtain 8 speeds, you must also configure 2 and 4 speeds.		**[No]** (nO)
PS16	**[16 preset speeds]** Identical to **[2 preset speeds]** (PS2) page 178. To obtain 16 speeds, you must also configure 2, 4 and 8 speeds.		**[No]** (nO)
SP2 ★ (1)	**[Preset speed 2]** Preset speed 2. See the Combination table for preset PID references page 203.	0 to 599 Hz	10 Hz
SP3 ★ (1)	**[Preset speed 3]** Preset speed 3. See the Combination table for preset PID references page 203.	0 to 599 Hz	15 Hz
SP4 ★ (1)	**[Preset speed 4]** Preset speed 4. See the Combination table for preset PID references page 203.	0 to 599 Hz	20 Hz
SP5 ★ (1)	**[Preset speed 5]** Preset speed 5. See the Combination table for preset PID references page 203.	0 to 599 Hz	25 Hz
SP6 ★ (1)	**[Preset speed 6]** Preset speed 6. See the Combination table for preset PID references page 203.	0 to 599 Hz	30 Hz
SP7 ★ (1)	**[Preset speed 7]** Preset speed 7. See the Combination table for preset PID references page 203.	0 to 599 Hz	35 Hz

Code	Name / Description	Adjustment range	Factory setting
SP8 ★ (1)	**[Preset speed 8]** Preset speed 8. See the Combination table for preset PID references page 203.	0 to 599 Hz	40 Hz
SP9 ★ (1)	**[Preset speed 9]** Preset speed 9. See the Combination table for preset PID references page 203.	0 to 599 Hz	45 Hz
SP10 ★ (1)	**[Preset speed 10]** Preset speed 10. See the Combination table for preset PID references page 203.	0 to 599 Hz	50 Hz
SP11 ★ (1)	**[Preset speed 11]** Preset speed 11. See the Combination table for preset PID references page 203.	0 to 599 Hz	55 Hz
SP12 ★ (1)	**[Preset speed 12]** Preset speed 12. See the Combination table for preset PID references page 203.	0 to 599 Hz	60 Hz
SP13 ★ (1)	**[Preset speed 13]** Preset speed 13. See the Combination table for preset PID references page 203.	0 to 599 Hz	70 Hz
SP14 ★ (1)	**[Preset speed 14]** Preset speed 14. See the Combination table for preset PID references page 203.	0 to 599 Hz	80 Hz
SP15 ★ (1)	**[Preset speed 15]** Preset speed 15. See the Combination table for preset PID references page 203.	0 to 599 Hz	90 Hz
SP16 ★ (1)	**[Preset speed 16]** Preset speed 16. The appearance of these **[Preset speed x]** (SPx) parameters is determined by the number of speeds configured. See the Combination table for preset PID references page 203.	0 to 599 Hz	100 Hz
JPF	**[Skip Frequency]** Skip frequency. This parameter helps to prevent prolonged operation within an adjustable range around the regulated frequency. This function can be used to help to prevent a critical speed, which would cause resonance, being reached. Setting the function to 0 renders it inactive.	0 to 599 Hz	0 Hz

Parameters described in this page can be accessed by: DRI- > CONF > FULL > FUN- > UPD-

Code	Name / Description	Adjustment range	Factory setting
JF2	**[Skip Frequency 2]**	0 to 599 Hz	0 Hz
	2nd skip frequency. This parameter helps to prevent prolonged operation within an adjustable range around the regulated frequency. This function can be used to help to prevent a critical speed, which would cause resonance, being reached. Setting the function to 0 renders it inactive.		
JF3	**[3rd Skip Frequency]**	0 to 599 Hz	0 Hz
	3rd skip frequency. This parameter helps to prevent prolonged operation within an adjustable range around the regulated frequency. This function can be used to help to prevent a critical speed, which would cause resonance, being reached. Setting the function to 0 renders it inactive.		
JFH	**[Skip.Freq.Hysteresis]**	0.1 to 10 Hz	1 Hz
★	This parameter is visible if at least one skip frequency **[Skip Frequency]** (JPF), **[Skip Frequency 2]** (JF2) or **[3rd Skip Frequency]** (JF3) is different from 0. Skip frequency range: between (JPF – JFH) and (JPF + JFH), for example. This adjustment is common to the 3 frequencies (JPF, JF2, JF3).		

(1) The parameter can also be accessed in the **[SETTINGS]** (SET-) menu.

★ These parameters only appear if the corresponding function has been selected in another menu. When the parameters can also be accessed and adjusted from within the configuration menu for the corresponding function, their description is detailed in these menus, on the pages indicated, to aid programming.

Parameter that can be modified during operation or when stopped.

+/- SPEED

Two types of operations are available:

- **Use of single action keys:** Two logic inputs are required in addition to the operating direction(s). The input assigned to the “+ speed” command increases the speed, the input assigned to the “- speed” command decreases the speed.
- **Use of double action keys:** Only one logic input assigned to “+ speed” is required.

+/- speed with double-press buttons:

Description: 1 button pressed twice (2 steps) for each direction of rotation. A contact closes each time the button is pressed.

	Released (- speed)	1st press (speed maintained)	2nd press (faster)
Forward button	–	a	a and b
Reverse button	–	c	c and d

Example of wiring:

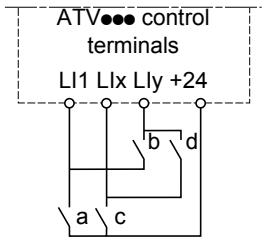

LI1: Forward

LIx: Reverse

LIy: + speed

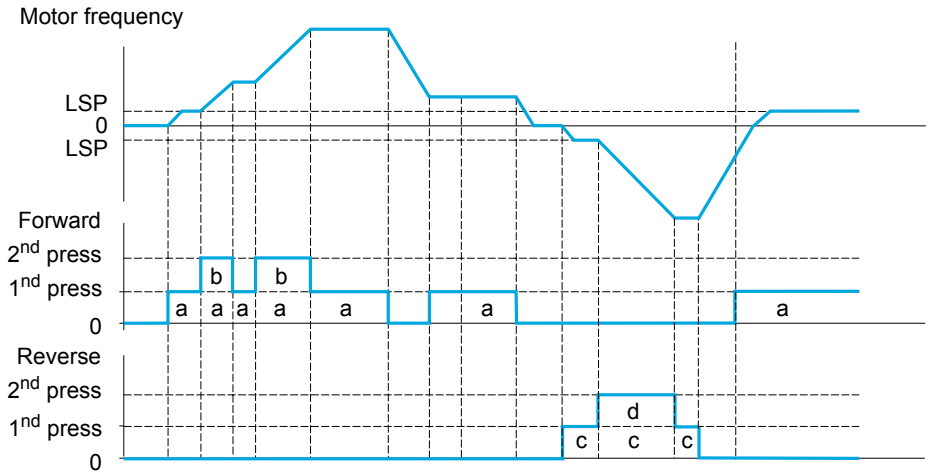

Do not use this +/-speed type with 3-wire control.

Whichever type of operation is selected, the max. speed is set by **[High speed]** (HSP) (see page 85).

Note:

If the reference is switched via **[Ref. 2 switching]** (rFC) (see page 152) from any one reference channel to another reference channel with "+/- speed", the value of reference **[Output frequency]** (rFr) (after ramp) may be copied at the same time in accordance with the **[Copy channel 1 --> 2]** (COP) parameter (see page 153).

If the reference is switched via **[Ref. 2 switching]** (rFC) (see page 152) from one reference channel to any other reference channel with "+/- speed", the value of reference **[Output frequency]** (rFr) (after ramp) is copied at the same time.

This helps to prevent the speed being incorrectly reset to zero when switching takes place.

Parameters described in this page can be accessed by: DRI- > CONF > FULL > FUN- > SRE-

Code	Name / Description	Adjustment range	Factory setting
FUn-	**[APPLICATION FUNCT.] (continued)**		
UPd-	**[+/- SPEED]** This function can be accessed if reference channel **[Ref.2 channel]** (Fr2) is set to **[+/-Speed]** (UPdt), see page 152. **Note:** This function cannot be used with certain other functions. Follow the instructions on page 160 .		
USP	**[+ speed assignment]** Function active if the assigned input or bit is at 1. nO **[No]** (nO): Not assigned LI1 **[LI1]** (LI1): Logical input LI1 ... **[...]** (...): See the assignment conditions on page 150		**[No]** (nO)
dSP	**[-Speed assignment]** See the assignment conditions on page 150 Function active if the assigned input or bit is at 1.		**[No]** (nO)
Str ★	**[Reference saved]** Associated with the "+/- speed" function, this parameter can be used to save the reference: - When the run commands disappear (saved to RAM). - When the line supply or the run commands disappear (saved to EEPROM). Therefore, the next time the drive starts up, the speed reference is the last reference saved. nO **[No]** (nO): No save (the next time the drive starts up, the speed reference is **[Low speed]** (LSP), see page 85) rAM **[RAM]** (rAM): Saved in RAM EEP **[EEprom]** (EEP): Saved in EEPROM		**[No]** (nO)

★ These parameters only appear if the corresponding function has been selected in another menu. When the parameters can also be accessed and adjusted from within the configuration menu for the corresponding function, their description is detailed in these menus, on the pages indicated, to aid programming.

Parameters described in this page can be accessed by: DRI- > CONF > FULL > FUN- > SPM-

+/- SPEED AROUND A REFERENCE

The reference is given by **[Ref.1 channel]** (Fr1) or **[Ref.1B channel]** (Fr1b) with summing/subtraction/multiplication functions and preset speeds if relevant (see the diagram on page 144). For improved clarity, we will call this reference A. The action of the +speed and -speed keys can be set as a % of this reference A. On stopping, the reference (A +/- speed) is not saved, so the drive restarts with reference A+ only.

The maximum total reference is limited by **[High speed]** (HSP) and the minimum reference by **[Low speed]** (LSP), see page 85.

Example of 2-wire control:

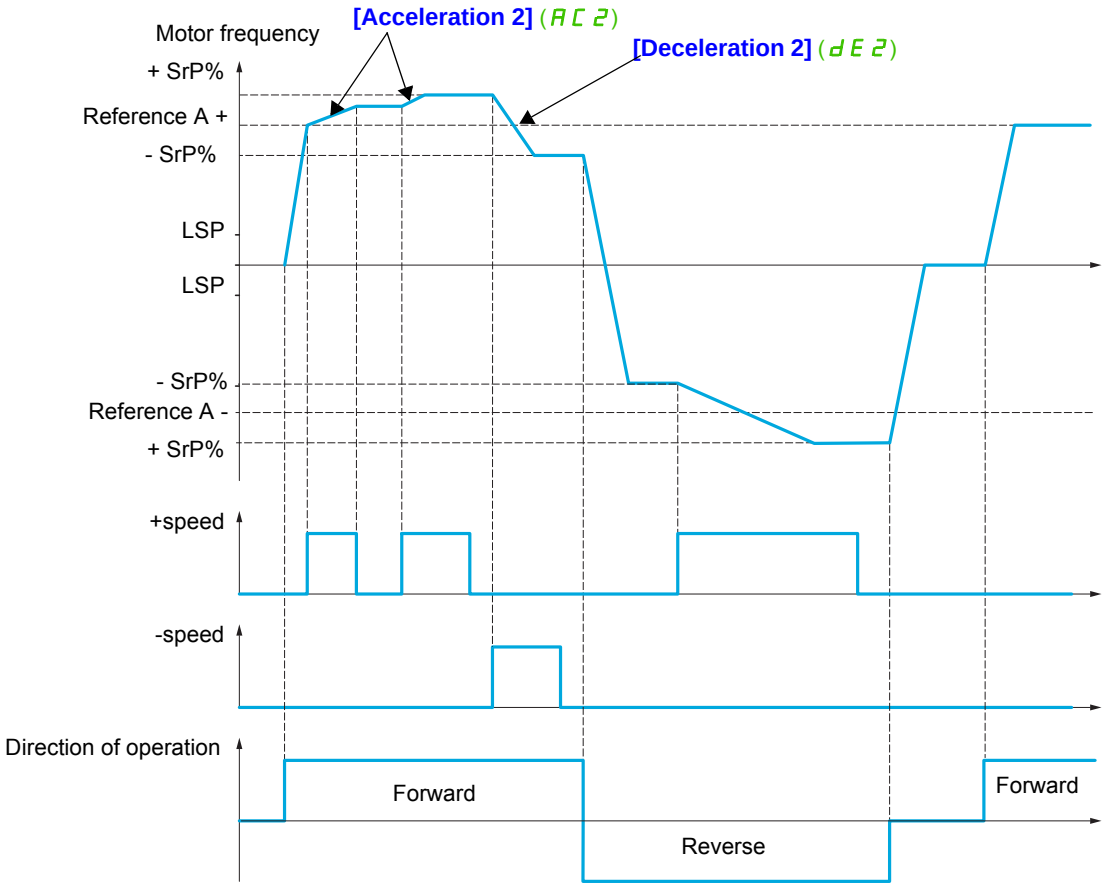

Parameters described in this page can be accessed by: DRI- > CONF > FULL > FUN- > FLI-

Code	Name / Description	Adjustment range	Factory setting
FUn-	**[APPLICATION FUNCT.] (continued)**		
SrE-	**[+/-SPEED AROUND REF.]** The function can be accessed for reference channel **[Ref.1 channel]** (Fr1). **Note:** This function cannot be used with certain other functions. Follow the instructions on page 163.		
US1	**[+ speed assignment]**		**[No]** (nO)
nO LI1 ...	**No]** (nO): Not assigned **[LI1]** (LI1): Logical input LI1 **[...]** (...): See the assignment conditions on page 150		
dS1	**[-Speed assignment]**		**[No]** (nO)
	See the assignment conditions on page 150 Function active if the assigned input or bit is at 1.		
SrP ★ (↻)	**[+/-Speed limitation]**	0 to 50%	10%
	This parameter limits the variation range with +/- speed as a % of the reference. The ramps used in this function are **[Acceleration 2]** (AC2) and **[Deceleration 2]** (dE2). This parameter can be accessed if +/- speed is assigned.		
AC2 ★ (↻) (1)	**[Acceleration 2]**	0.00 to 6,000 s (2)	5.00 s
	Time to accelerate from 0 to the **[Rated motor freq.]** (FrS). To have repeatability in ramps, the value of this parameter must be set according to the possibility of the application. This parameter can be accessed if **[+/- speed]** (tUd) is assigned.		
dE2 ★ (↻) (1)	**[Deceleration 2]**	0.00 to 6,000 s (2)	5.00 s
	Time to decelerate from the **[Rated motor freq.]** (FrS) to 0. To have repeatability in ramps, the value of this parameter must be set according to the possibility of the application. This parameter can be accessed if **[+/- speed]** (tUd) is assigned.		

(1) The parameter can also be accessed in the **[SETTINGS]** (SEt-) menu.
(2) Range 0.01 to 99.99 s or 0.1 to 999.9 s or 1 to 6,000 s according to **[Ramp increment]** (Inr) page 167.

★ These parameters only appear if the corresponding function has been selected in another menu. When the parameters can also be accessed and adjusted from within the configuration menu for the corresponding function, their description is detailed in these menus, on the pages indicated, to aid programming.

(↻) Parameter that can be modified during operation or when stopped.

Parameters described in this page can be accessed by: DRI- > CONF > FULL > FUN- > FLI-

REFERENCE MEMORIZING

Saving a speed reference value using a logic input command lasting longer than 0.1 s.

- This function is used to control the speed of several drives alternately via a single analog reference and one logic input for each drive.
- It is also used to confirm a line reference (communication bus or network) on several drives via a logic input. This allows movements to be synchronized by getting rid of variations when the reference is set.
- The reference is acquired 100 ms after the rising edge of the request. A new reference is not then acquired until a new request is made.

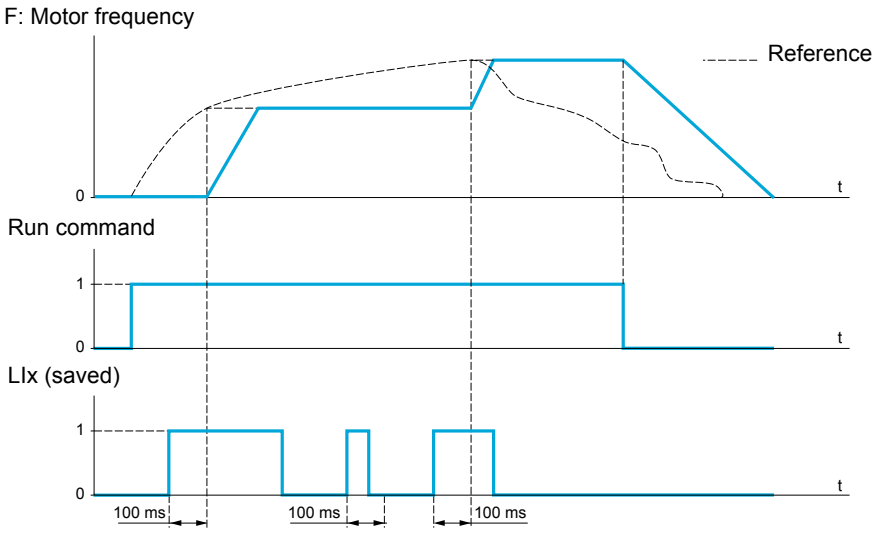

Code	Name / Description	Adjustment range	Factory setting
FUn-	**[APPLICATION FUNCT.] (continued)**		
SPM-	**[MEMO REFERENCE]**		
SPM	**[Ref. memo ass.]** Assignment to a logic input. Function active if the assigned input is at active state. nO **[No]** (nO): Not assigned LI1 **[LI1]** (LI1): Logical input LI1 ... **[...]** (...): See the assignment conditions on page 150		**[No]** (nO)

FLUXING BY LOGIC INPUT

Code	Name / Description	Adjustment range	Factory setting
FUn-	**[APPLICATION FUNCT.] (continued)**		
FLI-	**[FLUXING BY LI]**		
FLU	**[Motor fluxing]**		**[No]** (FnO)

★

(1)

2 s

⚠⚠DANGER

HAZARD OF ELECTRIC SHOCK, EXPLOSION OR ARC FLASH
When **[Motor fluxing]** (FLU) is set to **[Continuous]** (FCt), the drive automatically builds up flux.
Check this action will not endanger personnel or equipment in any way.
Failure to follow these instructions will result in death or serious injury.

CAUTION

RISK OF DAMAGE TO THE MOTOR
Check that the motor will withstand this current without overheating.
Failure to follow these instructions can result in equipment damage.

FnC **[Not cont.]** (FnC): Non-continuous mode
FCt **[Continuous]** (FCt): Continuous mode.
This option is not possible if **[Auto DC injection]** (AdC) page 173 is **[Yes]** (YES) or if **[Type of stop]** (Stt) page 170 is **[Freewheel]** (nSt).
FnO **[No]** (FnO): Function inactive

In order to obtain rapid high torque on startup, magnetic flux needs to already have been established in the motor.
In **[Continuous]** (FCt) mode, the drive automatically builds up flux when it is powered up.
In **[Not cont.]** (FnC) mode, fluxing occurs when the motor starts up.
The flux current is greater than **[Rated mot. current]** (nCr) (configured rated motor current) when the flux is established and is then adjusted to the motor magnetizing current.

If **[Motor control type]** (Ctt) page 102 is set to **[Sync. mot.]** (SYn), the **[Motor fluxing]** (FLU) parameter causes the alignment of the rotor and not the fluxing.
If **[Brake assignment]** (bLC) page 191 is not **[No]** (nO), the **[Motor fluxing]** (FLU) parameter has no effect.

FLI	**[Fluxing assignment]**		**[No]** (nO)

★

CAUTION

RISK OF DAMAGE TO THE MOTOR
Check that the motor will withstand this current without overheating.
Failure to follow these instructions can result in equipment damage.

Assignment is only possible if **[Motor fluxing]** (FLU) is set to **[Not cont.]** (FnC).
If an LI or a bit is assigned to the motor fluxing command, flux is built up when the assigned input or bit is at 1.
If an LI or a bit has not been assigned, or if the assigned LI or bit is at 0 when a run command is sent, fluxing occurs when the motor starts.

nO **[No]** (nO): Not assigned
LI1 **[LI1]** (LI1): Logical input LI1
... **[...]** (...): See the assignment conditions on page 150

Code	Name / Description	Adjustment range	Factory setting
ASt	**[Angle setting type]**		**[PSIO align.]** (PS10)
★	Mode for measuring the phase-shift angle. Visible only if **[Motor control type]** (Ctt) is set to **[Sync. mot.]** (SYn). **[PSI align]** (PS1) and **[PSIO align]** (PS10) are working for all type of synchronous motors. **[SPM align]** (SPMA) and **[IPM align]** (IPMA) increase performances depending on the type of synchronous motor.		
IPMA	**[IPM align]** (IPMA): Alignment for IPM motor. Alignment mode for Interior-buried Permanent Magnet motor (usually, this kind of motor has a high saliency level). It uses high frequency injection, which is less noisy than standard alignment mode.		
SPMA	**[SPM align]** (SPMA): Alignment for SPM motor. Mode for Surface-mounted Permanent Magnet motor (usually, this kind of motor has a medium or low saliency level). It uses high frequency injection, which is less noisy than standard alignment mode.		
PS1	**[PSI align]** (PS1): Pulse signal injection. Standard alignment mode by pulse signal injection.		
PS10	**[PSIO align]** (PS10): Pulse signal injection - Optimized. Standard optimized alignment mode by pulse signal injection. The phase-shift angle measurement time is reduced after the first run order or tune operation, even if the drive has been turned off.		
nO	**[No align]** (nO): No alignment		

(1) The parameter can also be accessed in the **[SETTINGS]** (SEt-) menu.

★ These parameters only appear if the corresponding function has been selected in another menu. When the parameters can also be accessed and adjusted from within the configuration menu for the corresponding function, their description is detailed in these menus, on the pages indicated, to aid programming.

Parameter that can be modified during operation or when stopped.

2 s To change the assignment of this parameter, press the ENT key for 2 s.

BRAKE LOGIC CONTROL

Used to control an electromagnetic brake by the drive, for horizontal and vertical hoisting applications, and for unbalanced machines.

Principle:

- Vertical hoisting movement:

Maintain motor torque in the driving load holding direction during brake opening and closing, in order to hold the load, start smoothly when the brake is released and stop smoothly when the brake is engaged.

- Horizontal movement:

Synchronize brake release with the build-up of torque during startup and brake engage at zero speed on stopping, to help to prevent jolting.

Recommended settings for brake logic control for a vertical hoisting application:

⚠ WARNING

LOSS OF CONTROL
• Check that the selected settings and configurations will not result in the dropping or loss of control of the load being lifted.
• Follow the recommandations below.
Failure to follow these instructions can result in death, serious injury, or equipment damage.

- **[Brake impulse]** (bIP): **[Yes]** (YES). Ensure that the direction of rotation FW corresponds to lifting the load.
  For applications in which the load being lowered is very different from the load being lifted, set bIP = 2 Ibr (for example, ascent always with a load and descent always without a load).
- Brake release current (**[Brake release I FW]** (Ibr) and **[Brake release I Rev]** (Ird) if **[Brake impulse]** (bIP) = 2 Ibr): Adjust the brake release current to the rated current indicated on the motor.
  During testing, adjust the brake release current in order to hold the load smoothly.
- Acceleration time: For hoisting applications, it is advisable to set the acceleration ramps to more than 0.5 seconds. Ensure that the drive does not exceed the current limit.
  The same recommendation applies for deceleration.
  Reminder: For a hoisting movement, a braking resistor should be used.
- **[Brake Release time]** (brt): Set according to the type of brake. It is the time required for the mechanical brake to release.
- **[Brake release frequency]** (bIr), in open-loop mode only: Leave in **[Auto]** (AUtO), adjust if necessary.
- **[Brake engage frequency]** (bEn): Leave in **[Auto]** (AUtO), adjust if necessary.
- **[Brake engage time]** (bEt): Set according to the type of brake. It is the time required for the mechanical brake to engage.

Recommended settings for brake logic control for a horizontal hoisting application:

- **[Brake impulse]** (bIP): No
- **[Brake release I FW]** (Ibr): Set to 0.
- **[Brake Release time]** (brt): Set according to the type of brake. It is the time required for the mechanical brake to release.
- **[Brake engage frequency]** (bEn), in open-loop mode only: Leave in **[Auto]** (AUtO), adjust if necessary.
- **[Brake engage time]** (bEt): Set according to the type of brake. It is the time required for the mechanical brake to engage.

Parameters described in this page can be accessed by: DRI- > CONF > FULL > FUN- > BLC-

Brake logic control, horizontal movement in open-loop mode

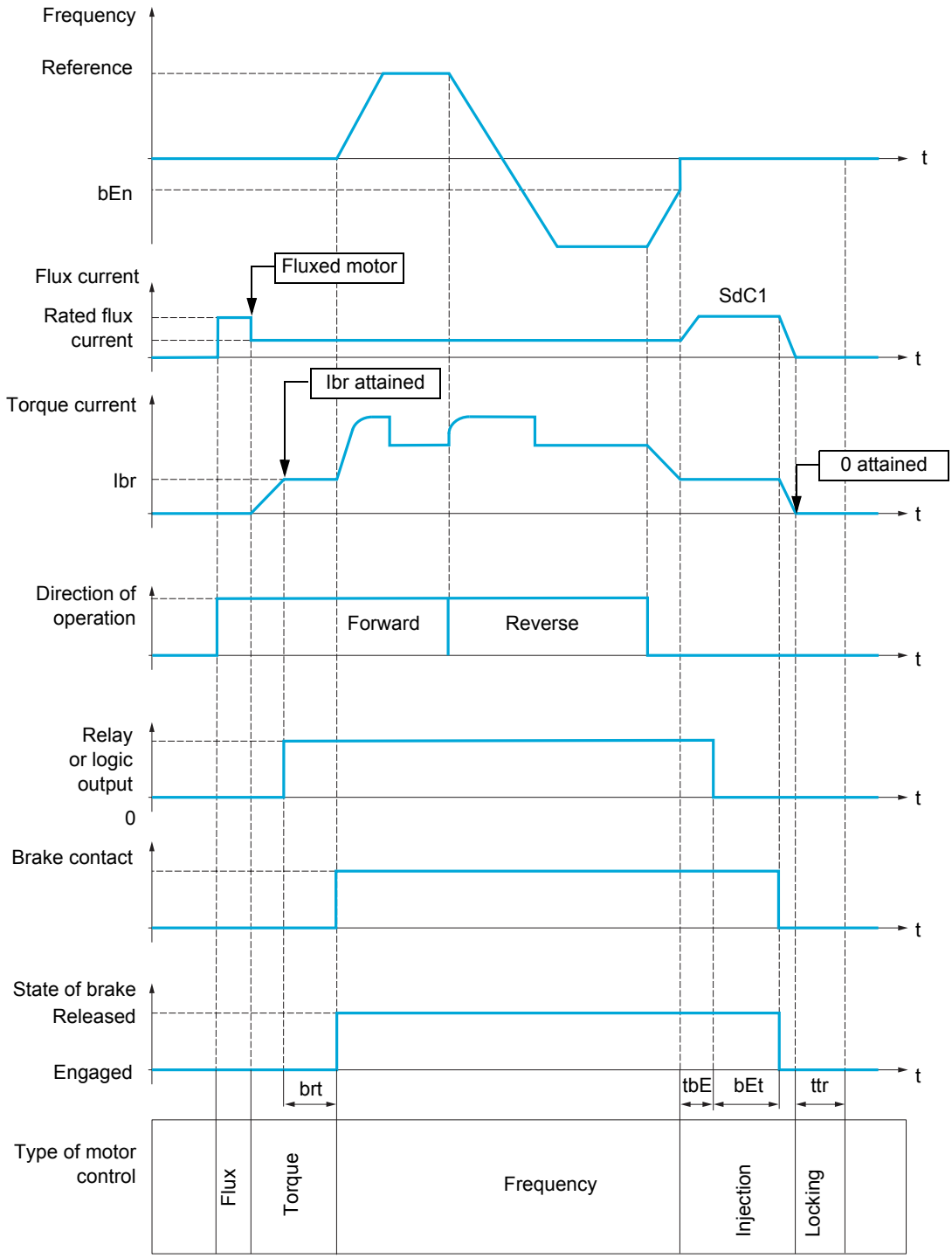

Key:

- (bEn): **[Brake engage freq]**
- (bEt): **[Brake engage time]**
- (brt): **[Brake Release time]**
- (Ibr): **[Brake release I FW]**
- (SdC1): **[Auto DC inj. level 1]**
- (tbE): **[Brake engage delay]**
- (ttr): **[Time to restart]**

Parameters described in this page can be accessed by: DRI- > CONF > FULL > FUN- > BLC-

Brake logic control, vertical movement in open-loop mode

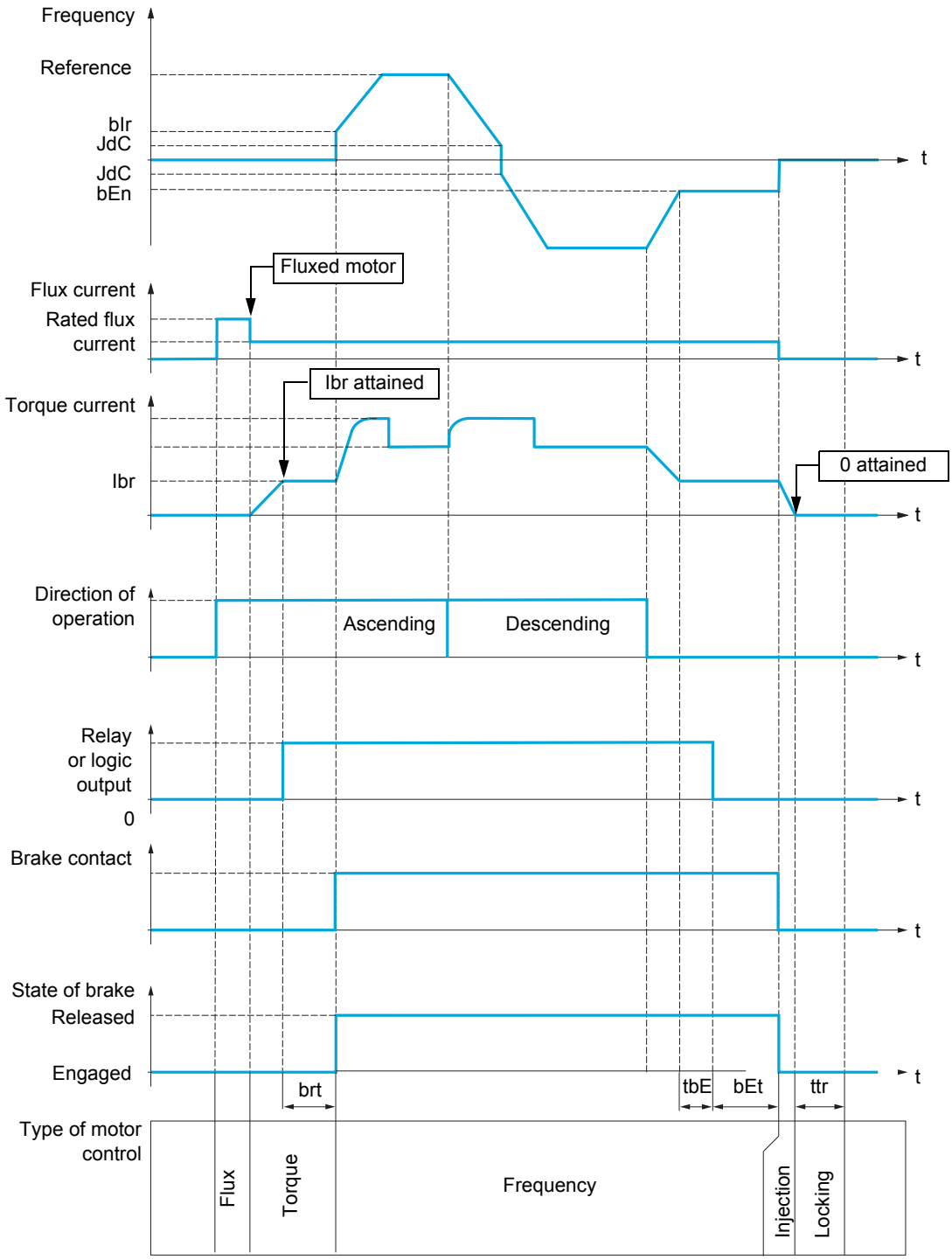

Key:

- (bEn): **[Brake engage freq]**
- (bEt): **[Brake engage time]**
- (blr): **[Brake release freq]**
- (brt): **[Brake Release time]**
- (Ibr): **[Brake release I FW]**
- (JdC): **[Jump at reversal]**
- (tbE): **[Brake engage delay]**
- (ttr): **[Time to restart]**

Parameters described in this page can be accessed by: DRI- > CONF > FULL > FUN- > BLC-

Code	Name / Description	Adjustment range	Factory setting
FUn -	**[APPLICATION FUNCT.] (continued)**		
bLC -	**[BRAKE LOGIC CONTROL]** **Note:** This function cannot be used with certain other functions. Follow the instructions on page 160.		
bLC	**[Brake assignment]** Logic output or control relay. **Note:** If the brake is assigned, only a ramp stop is possible. Check the **[Type of stop]** (Stt) page 170. Brake logic control can only be assigned if **[Motor control type]** (Ctt) is not set to **[Standard]** (Std), **[V/F 5pts]** (UF5), **[V/F Quad.]** (UF9) or **[Sync. mot]** (Syn). See Compatibility table page 162 to see the compatible functions. nO **[No]** (nO): Function not assigned (in this case, none of the function parameters can be accessed) r2 **[R2]** (r2): Relay LO1 **[LO1]** (LO1): Logic output dO1 **[dO1]** (dO1): Analog output AO1 functioning as a logic output. Selection can be made if **[AO1 assignment]** (AO1) page 141 is set to **[No]** (nO)		**[No]** (nO)
bSt ★	**[Movement type]** HOr **[Traveling]** (HOr): Resistive-load movement (translational motion of overhead crane, for example) **Note:** If **[Motor control type]** (Ctt) is set to **[Standard]** (Std) or **[V/F 5pts]** (UF5), **[Movement type]** (bSt) is forced to **[Traveling]** (HOr). UEr **[Hoisting]** (UEr): Driving-load movement (hoisting winch, for example) **Note:** If **[Weight sensor ass.]** (PES) page 197 is not **[No]** (nO), **[Movement type]** (bSt) is forced to **[Hoisting]** (UEr).		**[Hoisting]** (UEr)
bCI ★	**[Brake contact]** If the brake has a monitoring contact (closed for released brake). nO **[No]** (nO): Not assigned LI1 **[LI1]** (LI1): Logical input LI1 ... **[...]** (...): See the assignment conditions on page 150		**[No]** (nO)
bIP ★ ( )	**[Brake impulse]** Brake impulse. This parameter can be accessed if **[Weight sensor ass.]** (PES) is set to **[No]** (nO) (see page 197). It is set to **[Yes]** (YES) if **[Movement type]** (bSt) is set to **[Hoisting]** (UEr). nO **[No]** (nO): The motor torque is given in the required operating direction, at current **[Brake release I FW]** (Ibr) YES **[Yes]** (YES): The motor torque is in forward direction (check that this direction corresponds to ascending), at current **[Brake release I FW]** (Ibr) 2 Ibr **[2 IBR]** (2Ibr): The torque is in the required direction, at current **[Brake release I FW]** (Ibr) for Forward and **[Brake release I Rev]** (Ird) for Reverse, for certain specific applications		**[Yes]** (YES)
Ibr ★ ( ) (1)	**[Brake release I FW]** Brake release current threshold for ascending or forward movement. This parameter can be accessed if **[Weight sensor ass.]** (PES) is set to **[No]** (nO) page 197.	0 to 1.36 In (2)	0 A
Ird ★ ( )	**[Brake release I Rev]** Brake release current threshold for descending or reverse movement. This parameter can be accessed if **[Brake impulse]** (bIP) is set to **[2 IBR]** (2Ibr).	0 to 1.36 In (2)	0 A
brt ★ ( ) (1)	**[Brake Release time]** Brake release time delay.	0 to 5.00 s	0 s

Parameters described in this page can be accessed by: DRI- > CONF > FULL > FUN- > BLC-

Code	Name / Description	Adjustment range	Factory setting
b I r ★ (1) A U t O	**[Brake release freq]** Brake release frequency threshold (initialization of acceleration ramp). This parameter can be accessed if **[Movement type]** (b S t) page 191 is set to **[Hoisting]** (U E r). **[Auto]** (A U t O): The drive takes a value equal to the rated slip of the motor, calculated using the drive parameters **0 to 10 Hz**: Manual control.	**[Auto]** (A U t O) to 10 Hz	**[Auto]** (A U t O)
b E n ★ (1) A U t O	**[Brake engage freq]** Brake engage frequency threshold. **Note:** **[Brake engage freq]** (b E n) cannot be higher than **[Low speed]** (L S P). **[Auto]** (A U t O): The drive takes a value equal to the rated slip of the motor, calculated using the drive parameters **0 to 10 Hz**: Manual control.	**[Auto]** (A U t O) 0 to 10 Hz	**[Auto]** (A U t O)
t b E ★ (1)	**[Brake engage delay]** **⚠ WARNING** **LOSS OF CONTROL** Modify the Brake engage delay for horizontal movement only otherwise the control of the load can be lost. **Failure to follow these instructions can result in death, serious injury, or equipment damage.** Time delay before request to engage brake.	0 to 5.00 s	0 s
b E t ★ (1)	**[Brake engage time]** Brake engage time (brake response time).	0 to 5.00 s	0 s
S d C I ★ (1)	**[Auto DC inj. level 1]** **CAUTION** **RISK OF DAMAGE TO THE MOTOR** Check that the motor will withstand this current without overheating. **Failure to follow these instructions can result in equipment damage.** Level of standstill DC injection current. **Note:** This parameter can be accessed if **[Movement type]** (b S t) page 191 is set to **[Traveling]** (H O r).	0 to 1.2 In (2)	0.7 In (2)
b E d ★ n O Y E S	**[Engage at reversal]** Can be used to select whether or not the brake engages on transition to zero speed when the operating direction is reversed. **[No]** (n O): The brake does not engage **[Yes]** (Y E S): The brake engages		**[No]** (n O)

Parameters described in this page can be accessed by: DRI- > CONF > FULL > FUN- > BLC-

Code	Name / Description	Adjustment range	Factory setting
JdC ★ (1)	**[Jump at reversal]** This parameter can be accessed if **[Movement type]** (bSt) page 191 is set to **[Hoisting]** (UEr). AUt0 **[Auto]** (AUt0): The drive takes a value equal to the rated slip of the motor, calculated using the drive parameters - **0 to 10 Hz**: Manual control When the reference direction is reversed, this parameter can be used to avoid loss of torque (and consequential release of load) on transition to zero speed. Parameter is not applicable if **[Engage at reversal]** (bEd) = **[Yes]** (YES).	**[Auto]** (AUt0) to 10 Hz	**[Auto]** (AUt0)
ttr ★ (1)	**[Time to restart]** Time between the end of a brake engage sequence and the start of a brake release sequence.	0.00 to 15.00 s	0 s

(1) The parameter can also be accessed in the **[SETTINGS]** (SEt-) menu.
(2) In corresponds to the rated drive current indicated in the Installation manual and on the drive nameplate.

★ These parameters only appear if the corresponding function has been selected in another menu. When the parameters can also be accessed and adjusted from within the configuration menu for the corresponding function, their description is detailed in these menus, on the pages indicated, to aid programming.

Parameter that can be modified during operation or when stopped.

Brake control logic expert parameters

Following parameters for brake logic sequence are accessible in expert mode only.

Code	Name / Description	Adjustment range	Factory setting
brH0 ★	**[BRH b0]** Selection of the brake restart sequence if a run command is repeated while the brake is engaging. 0 **[0]** (0): The engage/release sequence is completely executed 1 **[1]** (1): The brake is released immediately A run command may be requested during the brake engagement phase. Whether or not the brake release sequence is executed depends on the value selected for **[BRH b0]** (brH0). 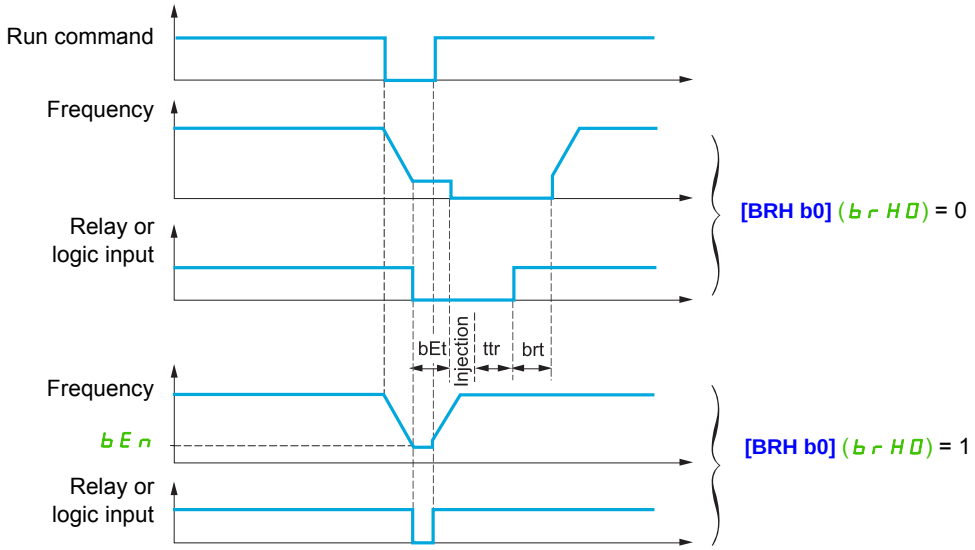 **Note:** If a run command is requested during the "ttr" phase, the complete brake control sequence is initialized.		0
brH1 ★	**[BRH b1]** Deactivation of the brake contact in steady state fault. 0 **[0]** (0): The brake contact in steady state fault is active (fault state if the contact is open during operation). The **[Brake feedback]** (brF) brake contact fault is monitored in all operating phases. 1 **[1]** (1): The brake contact in steady state fault is inactive. The **[Brake feedback]** (brF) brake contact fault is only monitored during the brake release and engage phases.		0

Parameters described in this page can be accessed by: DRI- > CONF > FULL > FUN- > BLC-

Code	Name / Description	Adjustment range	Factory setting
brH2 ★	**[BRH b2]** Taking the brake contact into account for the brake control sequence. 0 **[0]** (0): The brake contact is not taken into account 1 **[1]** (1): The brake contact is taken into account If a logic input is assigned to the brake contact: - **[BRH b2]** (brH2) = 0: During the brake release sequence, the reference is enabled at the end of the time **[Brake Release time]** (brt). During the brake engage sequence, the current changes to 0 according to the ramp **[Current ramp time]** (brr) at the end of the **[Brake engage time]** (bEt). - **[BRH b2]** (brH2) = 1: When the brake is released, the reference is enabled when the logic input changes to 1. When the brake is engaged, the current changes to 0 according to the ramp **[Current ramp time]** (brr) when the logic input changes to 0. 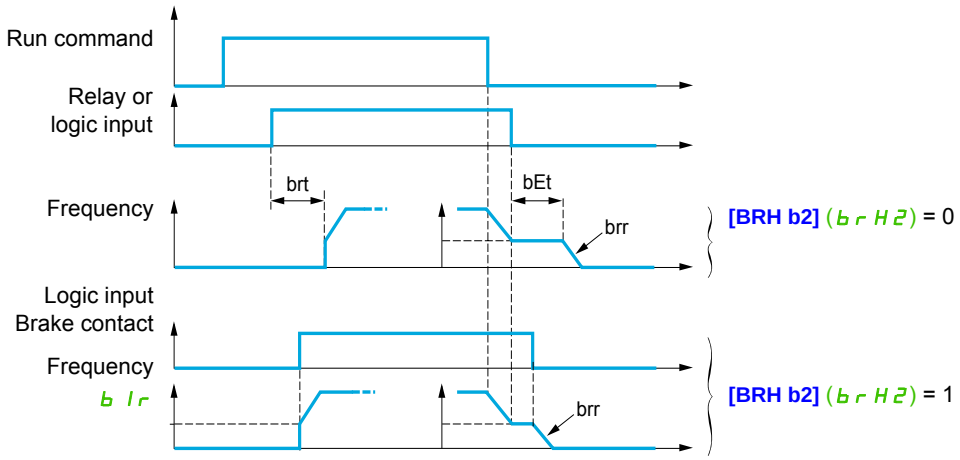 		0
brr ★ ↻	**[Current ramp time]** Torque current ramp time (increase and decrease) for a current variation equal to **[Brake release I FW]** (Ibr).	0 to 5.00 s	0 s

★ These parameters only appear if the corresponding function has been selected in another menu. When the parameters can also be accessed and adjusted from within the configuration menu for the corresponding function, their description is detailed in these menus, on the pages indicated, to aid programming.

↻ Parameter that can be modified during operation or when stopped.

EXTERNAL WEIGHT MEASUREMENT

Load measurement

This function uses the information supplied by a weight sensor to adapt the current **[Brake release I FW]** (I b r) of the **[BRAKE LOGIC CONTROL]** (b L C -) function. The signal from the weight sensor can be assigned to an analog input (usually a 4 - 20 mA signal) or to the pulse-in input, according to the type of weight sensor.

Example: Measurement of the total weight of a hoisting winch and its load

The current **[Brake release I FW]** (I b r) is adapted in accordance with the curve below.

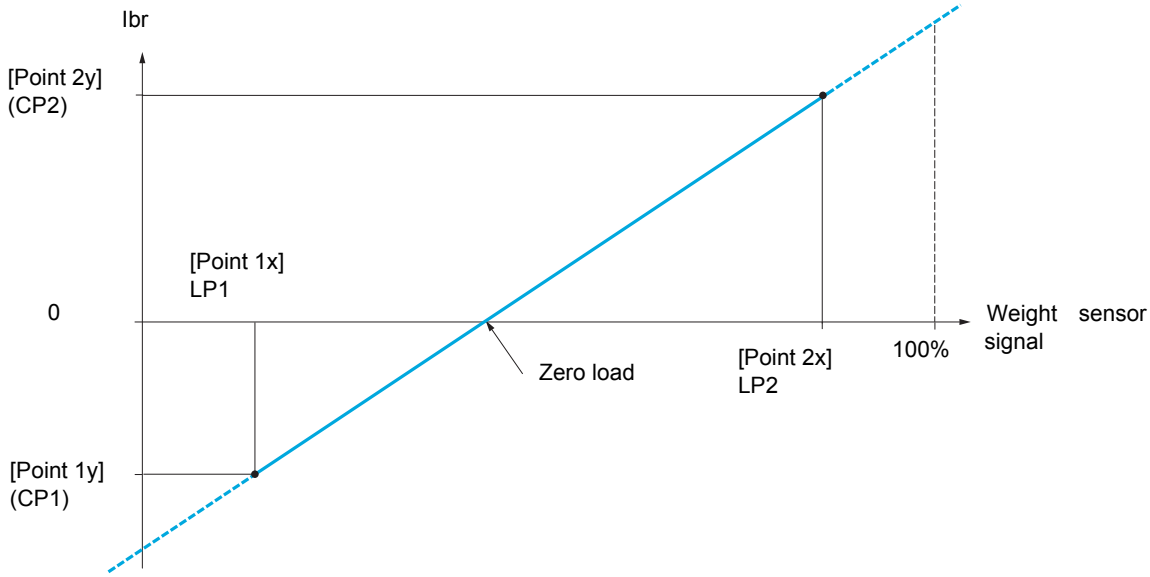

Code	Name / Description	Adjustment range	Factory setting
FUn-	**[APPLICATION FUNCT.] (continued)**		
ELM-	**[EXTERNAL WEIGHT MEAS.]**		
PES	**[Weight sensor ass.]**		**[No]** (nO)
	⚠ WARNING **LOSS OF CONTROL** Check that **[Point 1 X]** (LP1), **[Point 2x]** (LP2), **[Point 1Y]** (CP1) and **[Point 2Y]** (CP2) are correctly set to avoid loss of control of the load being lifted. **Failure to follow these instructions can result in death, serious injury, or equipment damage.**		
	This parameter can be configured if **[BRAKE LOGIC CONTROL]** (bLC-) page 191 is not set to **[No]** (nO).		
nO	**[No]** (nO): Not assigned		
AI1	**[AI1]** (AI1): Analog input A1		
AI2	**[AI2]** (AI2): Analog input A2		
AI3	**[AI3]** (AI3): Analog input A3		
PI	**[RP]** (PI): Pulse input		
AIU1	**[AI virtual 1]** (AIU1): Virtual analog input 1 with the jog dial		
AIU2	**[AI virtual 2]** (AIU2): Virtual analog input 2 by the communication bus		
OAO1	**[OA01]** (OAO1): Function blocks: Analog Output 01		
...	**...**		
OA10	**[OA10]** (OA10): Function blocks: Analog Output 10		
LP1	**[Point 1 X]**	0 to LP2-0.01%	0%
★	0 to 99.99% of signal on assigned input. **[Point 1x]** (LP1) must be less than **[Point 2x]** (LP2). This parameter can be accessed if **[Weight sensor ass.]** (PES) is assigned.		
CP1	**[Point 1Y]**	-1.36 In to 1.36 In (1)	-In (1)
★	Current corresponding to load **[Point 1 X]** (LP1), in A. This parameter can be accessed if **[Weight sensor ass.]** (PES) is assigned.		
LP2	**[Point 2X]**	LP1+0.01% to 100%	50%
★	0.01 to 100% of signal on assigned input. **[Point 2x]** (LP2) must be greater than **[Point 1x]** (LP1). This parameter can be accessed if **[Weight sensor ass.]** (PES) is assigned.		
CP2	**[Point 2Y]**	-1.36 In to 1.36 In (1)	0 A
★	Current corresponding to load **[Point 2x]** (LP2), in A. This parameter can be accessed if **[Weight sensor ass.]** (PES) is assigned.		
IbrA	**[Ibr 4-20 mA loss]**	0 to 1.36 In (1)	0
★ ( )	Brake release current in the event of the loss of the weight sensor information. This parameter can be accessed if the weight sensor is assigned to an analog current input and the 4-20 mA loss is deactivated. Recommended settings: Rated motor current for a hoisting application.		

(1) In corresponds to the rated drive current indicated in the Installation manual and on the drive nameplate.

★ These parameters only appear if the corresponding function has been selected in another menu. When the parameters can also be accessed and adjusted from within the configuration menu for the corresponding function, their description is detailed in these menus, on the pages indicated, to aid programming.

( ) Parameter that can be modified during operation or when stopped.

HIGH SPEED HOISTING

This function can be used to optimize the cycle times for hoisting movements for zero or lightweight loads. It authorizes operation at "constant power" in order to reach a speed greater than the rated speed without exceeding the rated motor current.

The speed remains limited by the **[High speed]** (*H S P*) parameter page 85.

The function acts on the speed reference pedestal and not on the reference itself.

Principle:

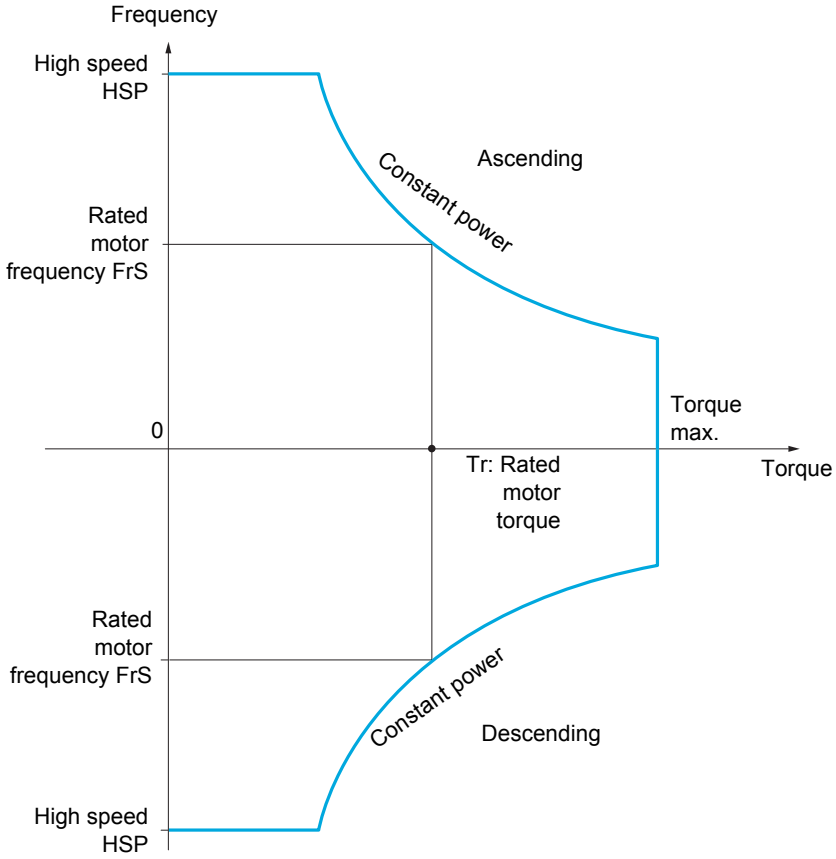

There are 2 possible operating modes:

- Speed reference mode: The maximum permissible speed is calculated by the drive during a speed step that is set so that the drive can measure the load.
- Current limitation mode: The maximum permissible speed is the speed that supports current limitation in motor mode, in the "ascending" direction only. For the "descending" direction, operation is in Speed reference mode.

Speed reference mode

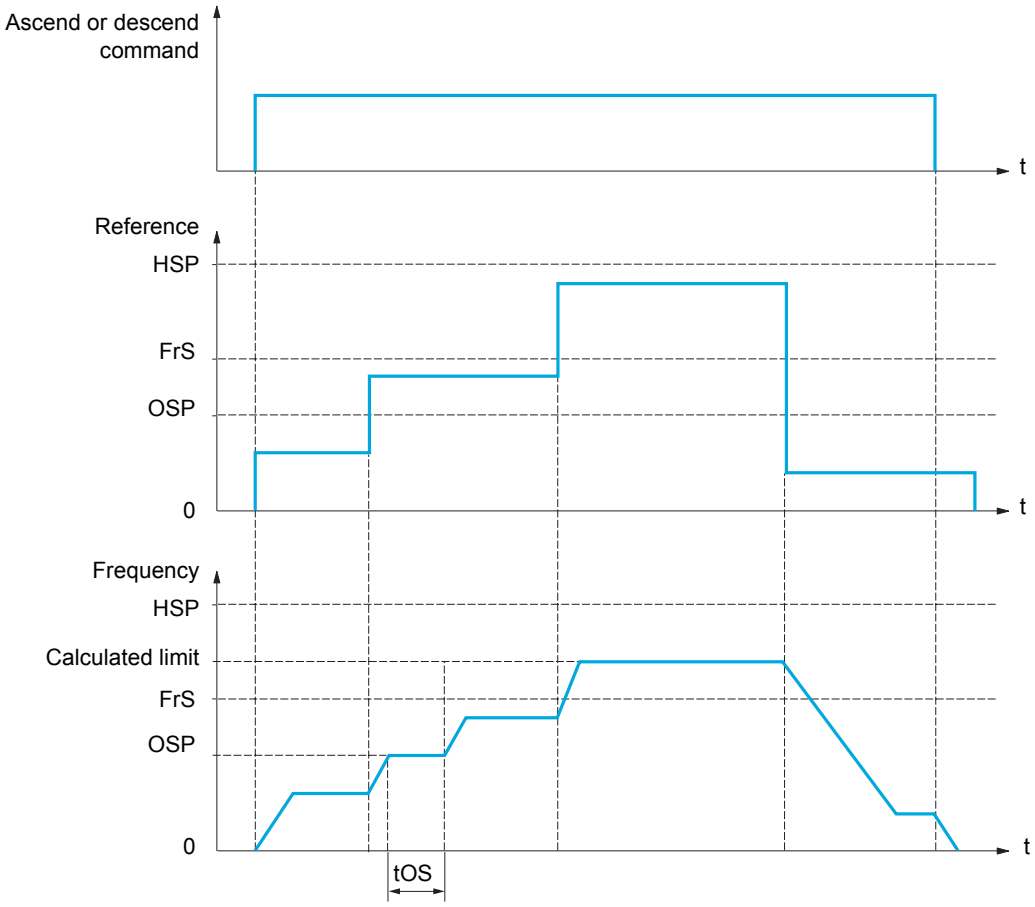

OSP: Adjustable speed step for load measurement

tOS: Load measuring time

Two parameters are used to reduce the speed calculated by the drive, for ascending and descending.

Parameters described in this page can be accessed by: DRI- > CONF > FULL > FUN- > HSH-

Current limiting mode

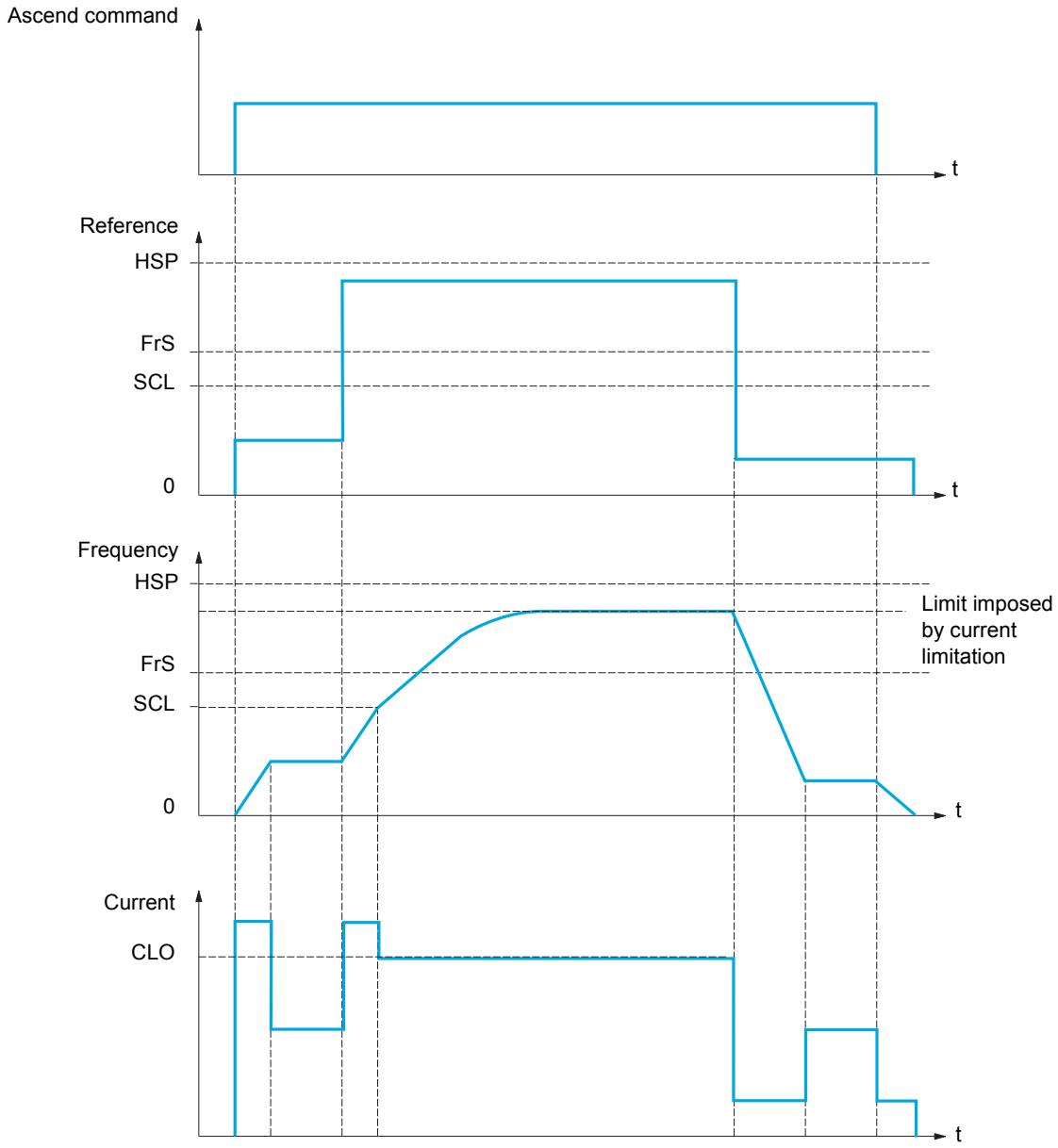

SCL: Adjustable speed threshold, above which current limitation is active

CLO: Current limitation for high-speed function

Note: The speed reached for a specific current will be lower in case of network undervoltage in comparison with nominal network voltage.

Parameters described in this page can be accessed by: DRI- > CONF > FULL > FUN- > HSH-

Rope slack

The Rope slack function can be used to help to prevent starting up at high speed when a load has been set down ready for lifting but the rope is still slack (as illustrated below).

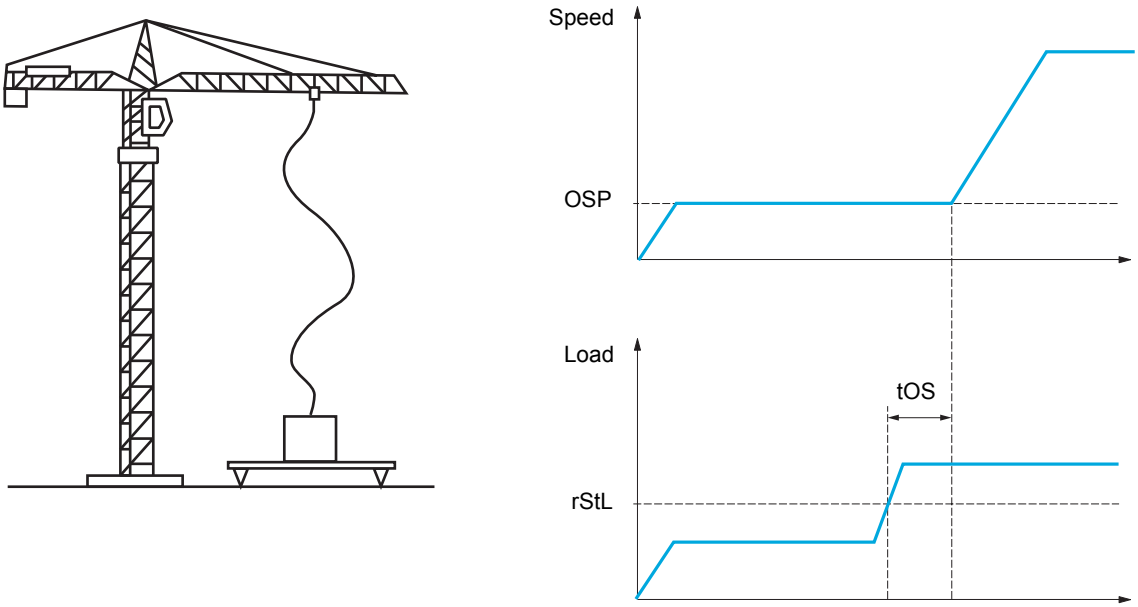

The speed step (OSP parameters) described on page 199 is used to measure the load. The effective measurement cycle will not be triggered until the load reaches the adjustable threshold **[Rope slack trq level]** (r S t L), which corresponds to the weight of the hook.

A logic output or a relay can be assigned to the indication of the rope slack state in the **[INPUTS / OUTPUTS CFG]** (I _ O -) menu.

Code	Name / Description	Adjustment range	Factory setting
FUn-	**[APPLICATION FUNCT.] (continued)**		
HSH-	**[HIGH SPEED HOISTING]** **Note:** This function cannot be used with certain other functions. Follow the instructions on page 160.		
HSO	**[High speed hoisting]** nO **[No]** (nO): Function inactive SSO **[Speed ref]** (SSO): Speed reference mode CSO **[I Limit]** (CSO): Current limitation mode		**[No]** (nO)
COF ★ ↻	**[Motor speed coeff.]** Speed reduction coefficient calculated by the drive for Ascending direction. This parameter can be accessed if **[High speed hoisting]** (HSO) is set to **[Speed ref]** (SSO).	0 to 100%	100%
COr ★ ↻	**[Gen. speed coeff]** Speed reduction coefficient calculated by the drive for Descending direction. This parameter can be accessed if **[High speed hoisting]** (HSO) is not set to **[No]** (nO).	0 to 100%	50%
tOS ★ ↻	**[Load measuring tm.]** Duration of speed step for measurement. This parameter can be accessed if **[High speed hoisting]** (HSO) is not set to **[No]** (nO).	0.1 s to 65 s	0.5 s
OSP ★ ↻	**[Measurement spd]** Speed stabilized for measurement. This parameter can be accessed if **[High speed hoisting]** (HSO) is not set to **[No]** (nO).	0 to **[Rated motor freq.]** (FrS)	40 Hz
CLO ★ ↻	**[High speed I Limit]** Current limitation at high speed. This parameter can be accessed if **[High speed hoisting]** (HSO) is set to **[I Limit]** (CSO). **Note:** If the setting is less than 0.25 In, the drive may lock in **[Output Phase Loss]** (OPL) fault mode if this has been enabled (see page 253).	0 to 1.5 In (1)	In (1)
SCL ★ ↻	**[I Limit. frequency]** Frequency threshold, above which the high-speed limitation current is active. This parameter can be accessed if **[High speed hoisting]** (HSO) is set to **[I Limit]** (CSO).	0 to 599 Hz according to rating	40 Hz
rSd ★	**[Rope slack config.]** Rope slack function. This parameter can be accessed if **[High speed hoisting]** (HSO) is not set to **[No]** (nO). nO **[No]** (nO): Function inactive drI **[Drive estim.]** (drI): Measurement of the load by estimating the torque generated by the drive PES **[Ext. sensor]** (PES): Measurement of the load using a weight sensor, can only be assigned if **[Weight sensor ass.]** (PES) page 197 is not **[No]** (nO)		**[No]** (nO)
rSTL ★	**[Rope slack trq level]** Adjustment threshold corresponding to a load weighing slightly less than the hook when off-load, as a % of the rated load. This parameter can be accessed if **[Rope slack trq level]** (rSd) has been assigned.	0 to 100%	0%

(1) In corresponds to the rated drive current indicated in the Installation manual and on the drive nameplate.

★ These parameters only appear if the corresponding function has been selected in another menu. When the parameters can also be accessed and adjusted from within the configuration menu for the corresponding function, their description is detailed in these menus, on the pages indicated, to aid programming.

↻ Parameter that can be modified during operation or when stopped.

PID REGULATOR

Block diagram

The function is activated by assigning an analog input to the PID feedback (measurement).

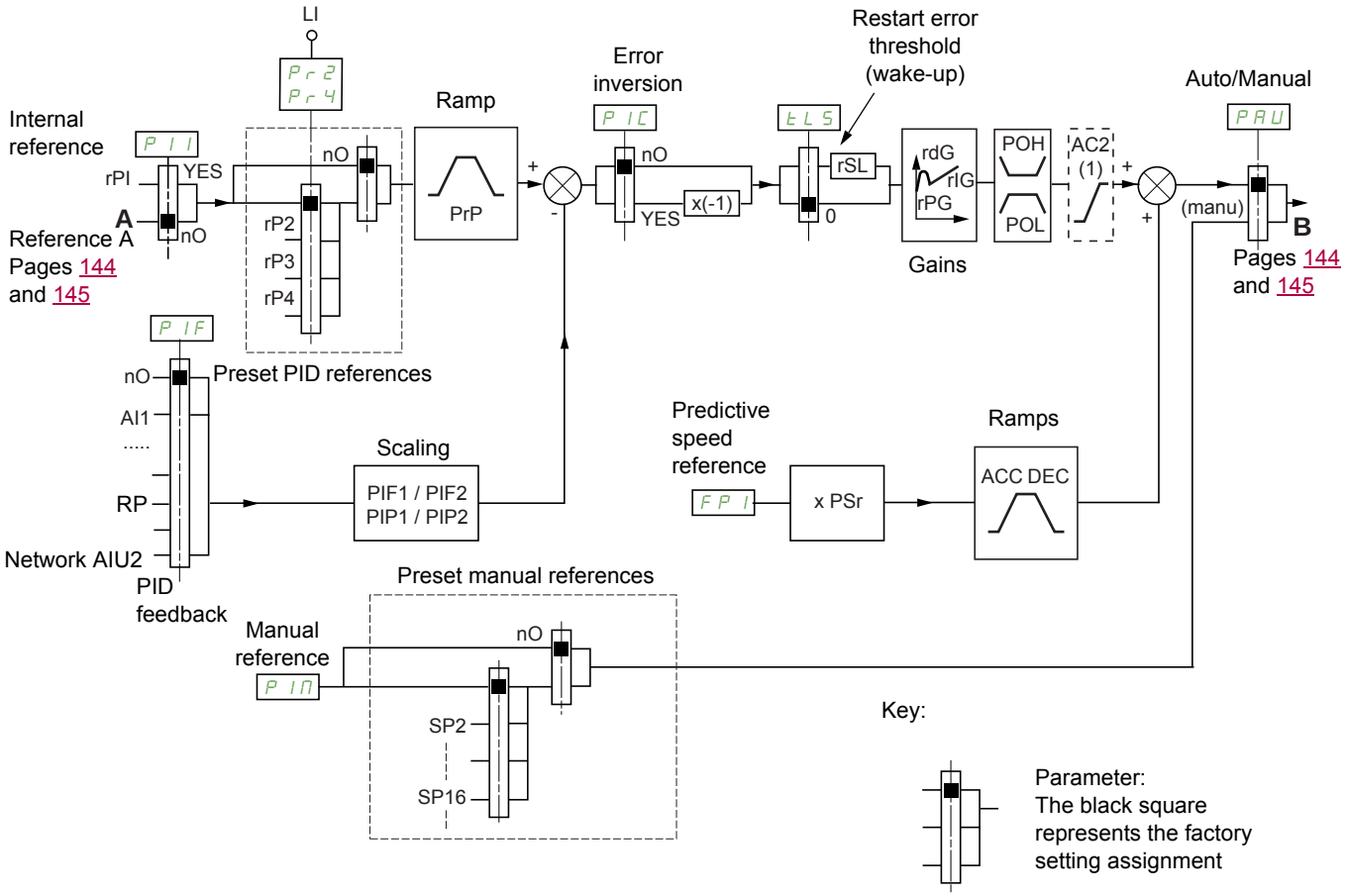

(1) Ramp AC2 is only active when the PID function starts up and during PID "wake-ups".

PID feedback:

The PID feedback must be assigned to one of the analog inputs AI1 to AI3, to the pulse input, according to whether any extension cards have been inserted.

PID reference:

The PID reference must be assigned to the following parameters: Preset references via logic inputs (rP2, rP3, rP4)

In accordance with the configuration of **[Act. internal PID ref.]** (PII) page 207:

Internal reference (rPI) or

Reference A (**[Ref.1 channel]** (Fr1) or **[Ref.1B channel]** (Fr1b), see page 151).

Combination table for preset PID references:

LI (Pr4)	LI (Pr2)	Pr2 = nO	Reference
			rPI or A
0	0		rPI or A
0	1		rP2
1	0		rP3
1	1		rP4

A predictive speed reference can be used to initialize the speed on restarting the process.

Scaling of feedback and references:

- **[Min PID feedback]** (PIF1), **[Max PID feedback]** (PIF2) parameters can be used to scale the PID feedback (sensor range). **This scale MUST be maintained for all other parameters.**
- **[Min PID reference]** (PIP1), **[Max PID reference]** (PIP2) parameters can be used to scale the adjustment range, for example the reference. **The adjustment range MUST remain within the sensor range.**

The maximum value of the scaling parameters is 32,767. To facilitate installation, we recommend using values as close as possible to this maximum level, while retaining powers of 10 in relation to the actual values.

Example (see graph below): Adjustment of the volume in a tank, between 6 m^3 and 15 m^3.

- Sensor used 4-20 mA, 4.5 m^3 for 4 mA and 20 m^3 for 20 mA, with the result that PIF1 = 4,500 and PIF2 = 20,000.
- Adjustment range 6 to 15 m^3, with the result that PIP1 = 6,000 (min. reference) and PIP2 = 15,000 (max. reference).
- Example references:
  - rP1 (internal reference) = 9,500
  - rP2 (preset reference) = 6,500
  - rP3 (preset reference) = 8,000
  - rP4 (preset reference) = 11,200

The **[3.4 DISPLAY CONFIG.]** menu can be used to customize the name of the unit displayed and its format.

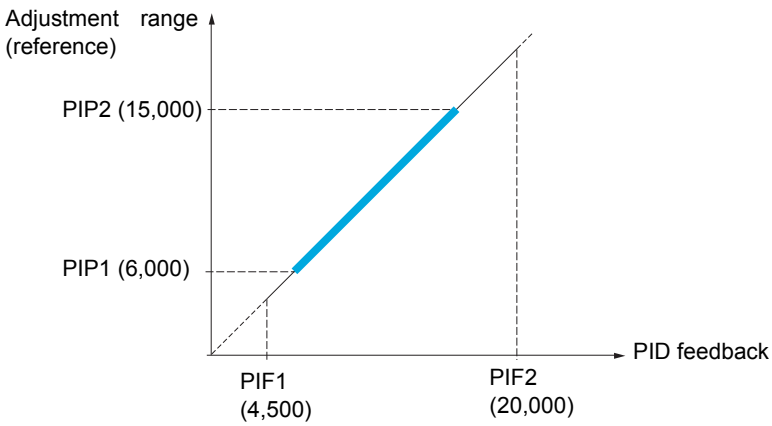

Other parameters:

- **[PID wake up thresh.]** (rSL) parameter: Can be used to set the PID error threshold, above which the PID regulator will be reactivated (wake-up) after a stop due to the max. time threshold being exceeded at low speed **[Low speed time out]** (tLS).
- Reversal of the direction of correction **[PID correct. reverse]** (PIC): If **[PID correct. reverse]** (PIC) is set to **[No]** (nO), the speed of the motor will increase when the error is positive (for example: pressure control with a compressor). If **[PID correct. reverse]** (PIC) is set to **[Yes]** (YES), the speed of the motor will decrease when the error is positive (for example: temperature control using a cooling fan).
- The integral gain may be short-circuited by a logic input.
- An alarm on the PID feedback may be configured and indicated by a logic output.
- An alarm on the PID error may be configured and indicated by a logic output.

"Manual - Automatic" Operation with PID

This function combines the PID regulator, the preset speeds and a manual reference. Depending on the state of the logic input, the speed reference is given by the preset speeds or by a manual reference input via the PID function.

Manual reference [Manual reference] (PIM):

- Analog inputs AI1 to AI3
- Pulse input

Predictive speed reference [Speed ref. assign.] (FPI):

- **[AI1]** (AI1): Analog input
- **[AI2]** (AI2): Analog input
- **[AI3]** (AI3): Analog input
- **[RP]** (PI): Pulse input
- **[HMI]** (LCC): Graphic display terminal or remote display terminal
- **[Modbus]** (Mdb): Integrated Modbus
- **[CANopen]** (CAn): Integrated CANopen®
- **[Com. card]** (nEt): Communication card (if inserted)

Setting up the PID regulator

1. Configuration in PID mode.
See the diagram on page 203.

2. Perform a test in factory settings mode.
To optimize the drive, adjust **[PID prop. gain]** (rPG) or **[PID integral gain]** (rIG) gradually and independently, and observe the effect on the PID feedback in relation to the reference.

3. If the factory settings are unstable or the reference is incorrect.

- Perform a test with a speed reference in Manual mode (without PID regulator) and with the drive on load for the speed range of the system:
  - In steady state, the speed must be stable and comply with the reference, and the PID feedback signal must be stable.
  - In transient state, the speed must follow the ramp and stabilize quickly, and the PID feedback must follow the speed. If this is not the case, see the settings for the drive and/or sensor signal and wiring.
- Switch to PID mode.
- Set **[Dec ramp adapt.]** (brA) to **[No]** (nO) (no auto-adaptation of the ramp).
- Set **[PID ramp]** (PrP) to the minimum permitted by the mechanism without triggering an **[Overbraking]** (ObF).
- Set the integral gain **[PID integral gain]** (rIG) to minimum.
- Leave the derivative gain **[PID derivative gain]** (rdG) at 0.
- Observe the PID feedback and the reference.
- Switch the drive ON/OFF a number of times or vary the load or reference rapidly a number of times.
- Set the proportional gain **[PID prop. gain]** (rPG) in order to ascertain the compromise between response time and stability in transient phases (slight overshoot and 1 to 2 oscillations before stabilizing).
- If the reference varies from the preset value in steady state, gradually increase the integral gain **[PID integral gain]** (rIG), reduce the proportional gain **[PID prop. gain]** (rPG) in the event of instability (pump applications), find a compromise between response time and static precision (see diagram).
- Lastly, the derivative gain may permit the overshoot to be reduced and the response time to be improved, although this will be more difficult to obtain a compromise in terms of stability, as it depends on 3 gains.
- Perform in-production tests over the whole reference range.

Parameters described in this page can be accessed by: DRI- > CONF > FULL > FUN- > PID-

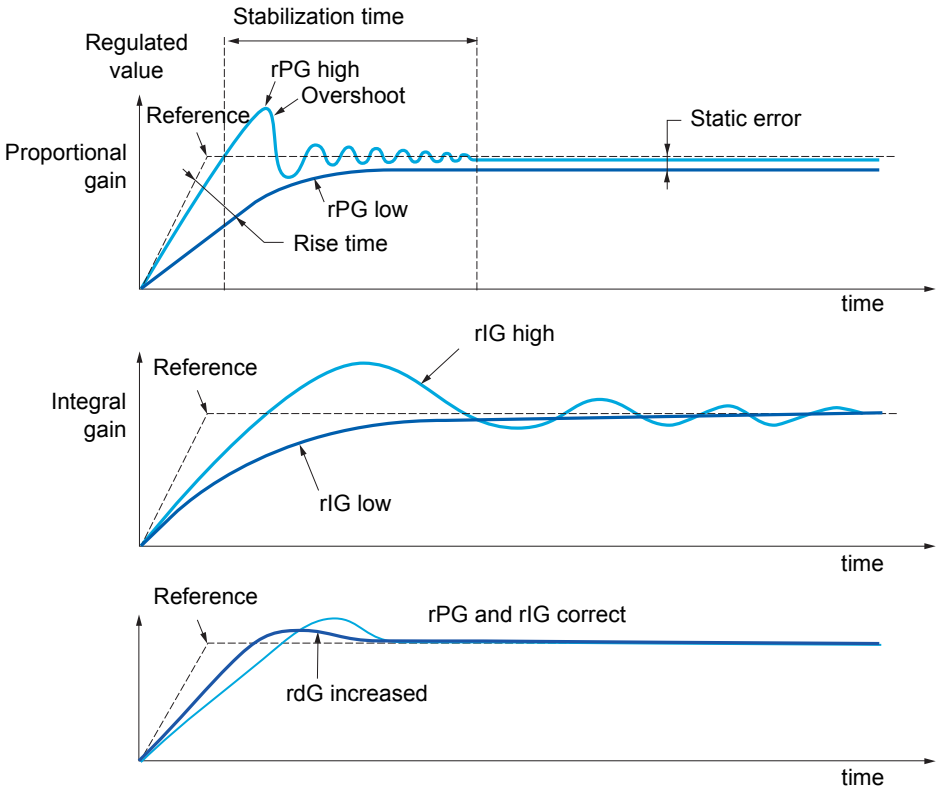

The oscillation frequency depends on the system kinematics.

Parameter	Rise time	Overshoot	Stabilization time	Static error
rPG ↗	↘↘	↗	=	↘
rIG ↗	↘	↗↗	↗	↘↘
rdG ↗	=	↘	↘	=

Parameters described in this page can be accessed by: DRI- > CONF > FULL > FUN- > PID-

Code	Name / Description	Adjustment range	Factory setting
FUn-	**[APPLICATION FUNCT.] (continued)**		
PId-	**[PID REGULATOR]** **Note**: This function cannot be used with certain other functions. Follow the instructions on page 160.		
PIF	**[PID feedback ass.]** nO **[No]** (nO): Not assigned AI1 **[AI1]** (AI1): Analog input A1 AI2 **[AI2]** (AI2): Analog input A2 AI3 **[AI3]** (AI3): Analog input A3 PI **[RP]** (PI): Pulse input AIU1 **[AI virtual 1]** (AIU1): Virtual analog input 1 by the communication bus AIU2 **[AI virtual 2]** (AIU2): Virtual analog input 2 by the communication bus OAO1 **[OA01]** (OAO1): Function blocks: Analog Output 01 ... **...** OA10 **[OA10]** (OA10): Function blocks: Analog Output 10		**[No]** (nO)
AIC2 ★	**[AI2 net. channel]** This parameter can be accessed if **[PID feedback ass.]** (PIF) is set to **[AI virtual 2]** (AIU2). This parameter can also be accessed in the **[INPUTS / OUTPUTS CFG]** (I-O-) menu. nO **[No]** (nO): Not assigned Mdb **[Modbus]** (Mdb): Integrated Modbus CAn **[CANopen]** (CAn): Integrated CANopen® nEt **[Com. card]** (nEt): Communication card (if inserted)		**[No]** (nO)
PIF1 ★ (1)	**[Min PID feedback]** Value for minimum feedback.	0 to **[Max PID feedback]** (PIF2) (2)	100
PIF2 ★ (1)	**[Max PID feedback]** Value for maximum feedback.	**[Min PID feedback]** (PIF1) to 32,767 (2)	1,000
PIP1 ★ (1)	**[Min PID reference]** Minimum process value.	**[Min PID feedback]** (PIF1) to **[Max PID reference]** (PIP2) (2)	150
PIP2 ★ (1)	**[Max PID reference]** Maximum process value.	**[Min PID reference]** (PIP1) to **[Max PID feedback]** (PIF2) (2)	900
PII ★	**[Act. internal PID ref.]** Internal PID regulator reference. nO **[No]** (nO): The PID regulator reference is given by **[Ref.1 channel]** (Fr1) or **[Ref.1B channel]** (Fr1b) with summing/subtraction/multiplication functions (see the diagram on page 203). YES **[Yes]** (YES): The PID regulator reference is internal via **[Internal PID ref.]** (rPI).		**[No]** (nO)

Parameters described in this page can be accessed by: DRI- > CONF > FULL > FUN- > PID-

Code	Name / Description	Adjustment range	Factory setting
rPI ★	**[Internal PID ref.]** Internal PID regulator reference. This parameter can also be accessed in the **[1.2 MONITORING]** (MON-) menu.	**[Min PID reference]** (PIP1) to **[Max PID reference]** (PIP2)	150
rPG ★	**[PID prop. gain]** Proportional gain.	0.01 to 100	1
rIG ★	**[PID integral gain]** Integral gain.	0.01 to 100	1
rdG ★	**[PID derivative gain]** Derivative gain.	0.00 to 100	0
PrP ★ (1)	**[PID ramp]** PID acceleration/deceleration ramp, defined to go from **[Min PID reference]** (PIP1) to **[Max PID reference]** (PIP2) and vice versa.	0 to 99.9 s	0 s
PIC ★	**[PID correct. reverse]** Reversal of the direction of correction **[PID correct. reverse]** (PIC): If **[PID correct. reverse]** (PIC) is set to **[No]** (nO), the speed of the motor will increase when the error is positive (example: pressure control with a compressor) If **[PID correct. reverse]** (PIC) is set to **[Yes]** (YES), the speed of the motor will decrease when the error is positive (example: temperature control using a cooling fan). nO **[No]** (nO): No YES **[Yes]** (YES): Yes		**[No]** (nO)
POL ★ (1)	**[Min PID output]** Minimum value of regulator output in Hz.	- 599 to 599 Hz	0 Hz
POH ★ (1)	**[Max PID output]** Maximum value of regulator output in Hz.	0 to 599 Hz	60 Hz
PAL ★ (1)	**[Min fbk alarm]** Minimum monitoring threshold for regulator feedback.	**[Min PID feedback]** (PIF1) to **[Max PID feedback]** (PIF2) (2)	100

Parameters described in this page can be accessed by: DRI- > CONF > FULL > FUN- > PID-

Code	Name / Description	Adjustment range	Factory setting
PAH ★ (1)	**[Max fbk alarm]** Maximum monitoring threshold for regulator feedback.	**[Min PID feedback]** (PIF1) to **[Max PID feedback]** (PIF2) (2)	1,000
PEr ★ (1)	**[PID error Alarm]** Regulator error monitoring threshold.	0 to 65,535 (2)	100
PIS ★	**[PID integral reset]** If the assigned input or bit is at 0, the function is inactive (the PID integral is enabled). If the assigned input or bit is at 1, the function is active (the PID integral is disabled). nO **No]** (nO): Not assigned LI1 **[LI1]** (LI1): Logical input LI1 ... **[...]** (...): See the assignment conditions on page 150		**[No]** (nO)
FPI ★	**[Speed ref. assign.]** PID regulator predictive speed input. nO **[No]** (nO): Not assigned AI1 **[AI1]** (AI1): Analog input A1 AI2 **[AI2]** (AI2): Analog input A2 AI3 **[AI3]** (AI3): Analog input A3 LCC **[HMI]** (LCC): Graphic display terminal or remote display terminal source Mdb **[Modbus]** (Mdb): Integrated Modbus CAn **[CANopen]** (CAn): Integrated CANopen® nEt **[Com. card]** (nEt): Communication option board source PI **[RP]** (PI): Pulse input AIU1 **[AI virtual 1]** (AIU1): Virtual analog input 1 with the jog dial OAO1 **[OA01]** (OAO1): Function blocks: Analog Output 01 ... **...** OA10 **[OA10]** (OA10): Function blocks: Analog Output 10		**[No]** (nO)
PSr ★ (1)	**[Speed input %]** Multiplying coefficient for predictive speed input. This parameter cannot be accessed if **[Speed ref. assign.]** (FPI) is set to **[No]** (nO).	1 to 100%	100%
PAU ★	**[Auto/Manual assign.]** If the assigned input or bit is at 0, the PID is active. If the assigned input or bit is at 1, manual operation is active. nO **[No]** (nO): Not assigned LI1 **[LI1]** (LI1): Logical input LI1 ... **[...]** (...): See the assignment conditions on page 150		**[No]** (nO)
AC2 ★ (1)	**[Acceleration 2]** Time to accelerate from 0 to the **[Rated motor freq.]** (FrS). To have repeatability in ramps, the value of this parameter must be set according to the possibility of the application. Ramp AC2 is only active when the PID function starts up and during PID "wake-ups".	0.00 to 6,000 s (3)	5 s

Parameters described in this page can be accessed by: DRI- > CONF > FULL > FUN- > PID-

Code	Name / Description	Adjustment range	Factory setting
PIM ★	**[Manual reference]** Manual speed input. This parameter can be accessed if **[Auto/Manual assign.]** (PAU) is not set to **[No]** (nO). The preset speeds are active on the manual reference if they have been configured. nO **[No]** (nO): Not assigned AI1 **[AI1]** (AI1): Analog input A1 AI2 **[AI2]** (AI2): Analog input A2 AI3 **[AI3]** (AI3): Analog input A3 PI **[RP]** (PI): Pulse input AIU1 **[AI virtual 1]** (AIU1): Virtual analog input 1 with the jog dial OAO1 **[OA01]** (OAO1): Function blocks: Analog Output 01 . . . OA10 **[OA10]** (OA10): Function blocks: Analog Output 10		**[No]** (nO)
tLS (1)	**[Low speed time out]** Maximum operating time at **[Low speed]** (LSP) (see **[Low speed]** (LSP) page 85). Following operation at **[Low speed]** (LSP) for a defined period, a motor stop is requested automatically. The motor will restart if the reference is greater than **[Low speed]** (LSP) and if a run command is still present. **Note:** A value of 0 indicates an unlimited period of time. If **[Low speed time out]** (tLS) is not 0, **[Type of stop]** (Stt) page 170 is forced to **[Ramp stop]** (rMP) (only if a ramp stop can be configured).	0 to 999.9 s	0 s
rSL ★ 2 s	**[PID wake up thresh.]** **⚠ DANGER** **UNINTENDED EQUIPMENT OPERATION** Check that unintended restarts will not present any danger. **Failure to follow these instructions will result in death or serious injury.** If the "PID" and "Low speed operating time" **[Low speed time out]** (tLS) functions are configured at the same time, the PID regulator may attempt to set a speed lower than **[Low speed]** (LSP). This results in unsatisfactory operation, which consists of starting, operating at low speed then stopping, and so on… Parameter **[PID wake up thresh.]** (rSL) (restart error threshold) can be used to set a minimum PID error threshold for restarting after a stop at prolonged **[Low speed]** (LSP). **[PID wake up thresh.]** (rSL) is a percentage of the PID error (value depends on **[Min PID feedback]** (PIF1) and **[Max PID feedback]** (PIF2), see **[Min PID feedback]** (PIF1) page 207). The function is inactive if **[Low speed time out]** (tLS) = 0 or if **[PID wake up thresh.]** (rSL) = 0.	0.0 to 100.0	0

(1) The parameter can also be accessed in the **[SETTINGS]** (SEt-) menu.
(2) If a graphic display terminal is not in use, values greater than 9,999 will be displayed on the 4-digit display with a period mark after the thousand digit, for example, 15.65 for 15,650.
(3) Range 0.01 to 99.99 s or 0.1 to 999.9 s or 1 to 6,000 s according to **[Ramp increment]** (Inr) page 167.

★ These parameters only appear if the corresponding function has been selected in another menu. When the parameters can also be accessed and adjusted from within the configuration menu for the corresponding function, their description is detailed in these menus, on the pages indicated, to aid programming.

Parameter that can be modified during operation or when stopped.

2 s To change the assignment of this parameter, press the ENT key for 2 s.

PID PRESET REFERENCES

Code	Name / Description	Adjustment range	Factory setting
FUn-	**[APPLICATION FUNCT.] (continued)**		
Pr I-	**[PID PRESET REFERENCES]** Function can be accessed if **[PID feedback ass.]** (PIF) page 207 is assigned.		
Pr2	**[2 preset PID ref.]** If the assigned input or bit is at 0, the function is inactive. If the assigned input or bit is at 1, the function is active. nO **[No]** (nO): Not assigned LI1 **[LI1]** (LI1): Logical input LI1 ... **[...]** (...): See the assignment conditions on page 150		**[No]** (nO)
Pr4	**[4 preset PID ref.]** Check that **[2 preset PID ref.]** (Pr2) has been assigned before assigning this function. Identical to **[2 preset PID ref.]** (Pr2) page 209. If the assigned input or bit is at 0, the function is inactive. If the assigned input or bit is at 1, the function is active.		**[No]** (nO)
rP2 ★ (1)	**[Preset ref. PID 2]** This parameter can be accessed if **[2 preset PID ref.2]** (Pr2) is assigned.	**[Min PID reference]** (PIP1) to **[Max PID reference]** (PIP2) (2)	300
rP3 ★ (1)	**[Preset ref. PID 3]** This parameter can be accessed if **[3 preset PID ref.]** (Pr3) is assigned.	**[Min PID reference]** (PIP1) to **[Max PID reference]** (PIP2) (2)	600
rP4 ★ (1)	**[Preset ref. PID 4]** This parameter can be accessed if **[4 preset PID ref.]** (Pr4) is assigned.	**[Min PID reference]** (PIP1) to **[Max PID reference]** (PIP2) (2)	900

(1) The parameter can also be accessed in the **[SETTINGS]** (SEt-) menu.

(2) If a graphic display terminal is not in use, values greater than 9,999 will be displayed on the 4-digit display with a period mark after the thousand digit, for example, 15.65 for 15,650.

★ These parameters only appear if the corresponding function has been selected in another menu. When the parameters can also be accessed and adjusted from within the configuration menu for the corresponding function, their description is detailed in these menus, on the pages indicated, to aid programming.

Parameter that can be modified during operation or when stopped.

Parameters described in this page can be accessed by: DRI- > CONF > FULL > FUN- > PRI-

TORQUE LIMITATION

There are two types of torque limitation:

- With a value that is fixed by a parameter
- With a value that is set by an analog input (AI or pulse)

If both types are enabled, the lowest value is taken into account. The two types of limitation can be configured or switched remotely using a logic input or via the communication bus.

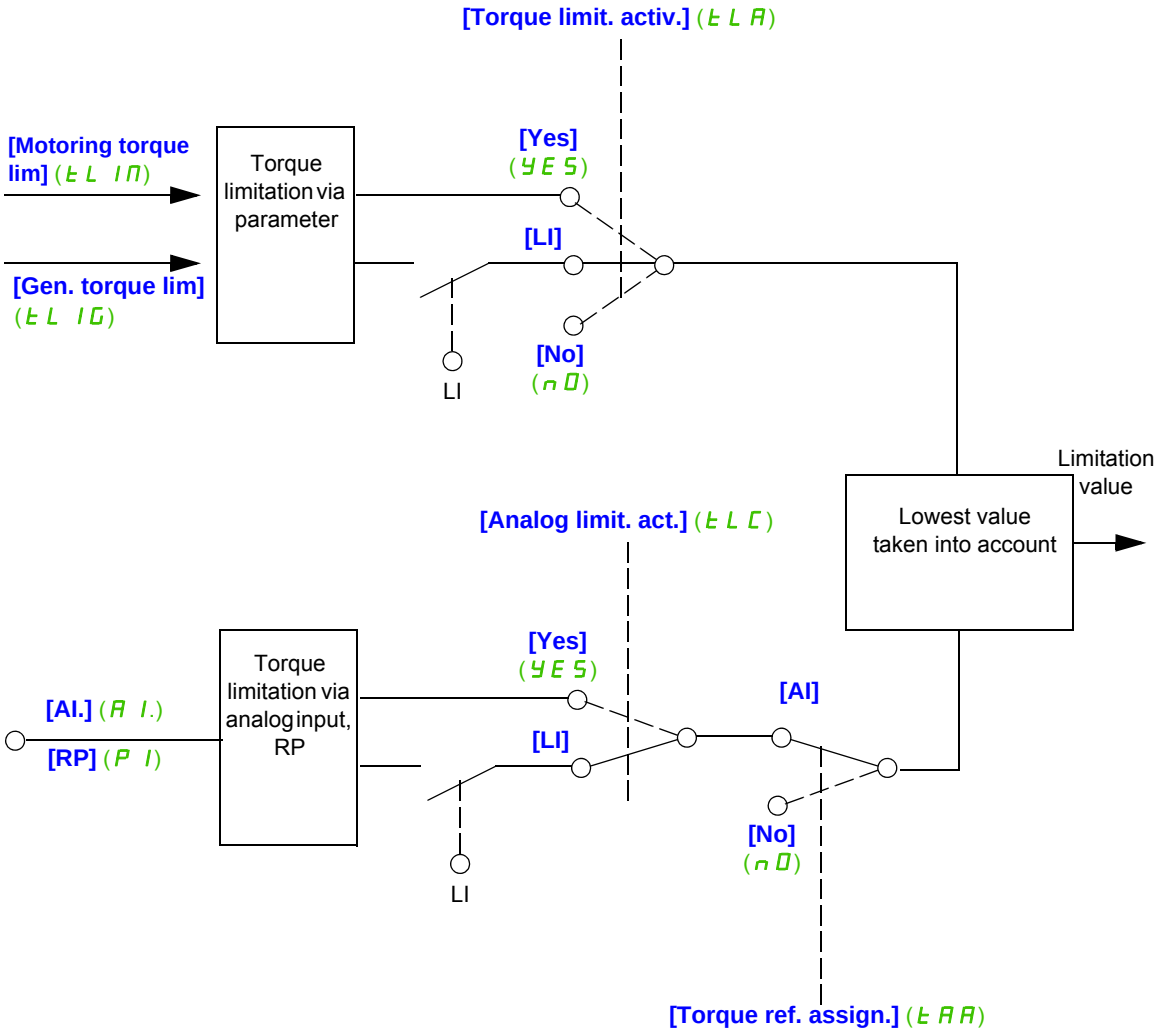

Parameters described in this page can be accessed by: DRI- > CONF > FULL > FUN- > TOL-

Code	Name / Description	Adjustment range	Factory setting
FUn -	**[APPLICATION FUNCT.] (continued)**		
tOL -	**[TORQUE LIMITATION]**		
tLA	**[Torque limit. activ.]** If the assigned input or bit is at 0, the function is inactive. If the assigned input or bit is at 1, the function is active. nO **[No]** (nO): Function inactive YES **[Yes]** (YES): Function always active LI1 **[LI1]** (LI1): Logical input LI1 ... **[...]** (...): See the assignment conditions on page 150		**[No]** (nO)
IntP ★	**[Torque increment]** This parameter cannot be accessed if **[Torque limit. activ.]** (tLA) is set to **[No]** (nO). Selection of units for the **[Motoring torque lim]** (tLIM) and **[Gen. torque lim]** (tLIG) parameters. 0.1 **[0,1%]** (0.1): Unit 0.1% 1 **[1%]** (1): Unit 1%		**[1%]** (1)
tLIM ★ (1)	**[Motoring torque lim]** This parameter cannot be accessed if **[Torque limit. activ.]** (tLA) is set to **[No]** (nO). Torque limitation in motor mode, as a % or in 0.1% increments of the rated torque in accordance with the **[Torque increment]** (IntP) parameter.	0 to 300%	100%
tLIG ★ (1)	**[Gen. torque lim]** This parameter cannot be accessed if **[Torque limit. activ.]** (tLA) is set to **[No]** (nO). Torque limitation in generator mode, as a % or in 0.1% increments of the rated torque in accordance with the **[Torque increment]** (IntP) parameter.	0 to 300%	100%
tAA	**[Torque ref. assign.]** If the function is assigned, the limitation varies between 0% and 300% of the rated torque on the basis of the 0% to 100% signal applied to the assigned input. Examples: 12 mA on a 4-20 mA input results in limitation to 150% of the rated torque. 2.5 V on a 10 V input results in 75% of the rated torque. nO **[No]** (nO): Not assigned (function inactive) AI1 **[AI1]** (AI1): Analog input AI2 **[AI2]** (AI2): Analog input AI3 **[AI3]** (AI3): Analog input PI **[RP]** (PI): Pulse input AIU1 **[AI Virtual 1]** (AIU1): Virtual analog input 1 with the jog dial AIU2 **[AI Virtual 2]** (AIU2): Virtual input via communication bus, to be configured via **[AI2 net. channel]** (AIC2) page 132. OAO1 **[OA01]** (OAO1): Function blocks: Analog Output 01 ... **...** OA10 **[OA10]** (OA10): Function blocks: Analog Output 10		**[No]** (nO)

Parameters described in this page can be accessed by: DRI- > CONF > FULL > FUN- > TOL-

Code	Name / Description	Adjustment range	Factory setting
tLC	**[Analog limit. act.]** This parameter cannot be accessed if **[Torque limit. activ.]** (tLA) is set to **[No]** (nO). Identical to **[Torque limit. activ.]** (tLA) page 213. If the assigned input or bit is at 0: The limitation is specified by the **[Motoring torque lim]** (tLIM) and **[Gen. torque lim.]** (tLIG) parameters if **[Torque limit. activ.]** (tLA) is not **[No]** (nO). No limitation if **[Torque limit. activ.]** (tLA) is set to **[No]** (nO). If the assigned input or bit is at 1: The limitation depends on the input assigned by **[Torque ref. assign.]** (tAA). **Note:** If **[Torque limitation]** (tLA) and **[Torque ref. assign.]** (tAA) are enabled at the same time, the lowest value will be taken into account.		**[Yes]** (YES)

(1) The parameter can also be accessed in the **[SETTINGS]** (SEt-) menu.

★ These parameters only appear if the corresponding function has been selected in another menu. When the parameters can also be accessed and adjusted from within the configuration menu for the corresponding function, their description is detailed in these menus, on the pages indicated, to aid programming.

Parameter that can be modified during operation or when stopped.

2ND CURRENT LIMITATION

Code	Name / Description	Adjustment range	Factory setting
FUn-	**[APPLICATION FUNCT.] (continued)**		
CL1-	**[2nd CURRENT LIMIT.]**		
LC2	**[Current limit 2]** If the assigned input or bit is at 0, the first current limitation is active. If the assigned input or bit is at 1, the second current limitation is active. nO **[No]** (nO): Function inactive LI1 **[LI1]** (LI1): Logical input LI1 . . . **[...]** (. . .): See the assignment conditions on page 150		**[No]** (nO)
CL2 ★ ()	**[I Limit. 2 value]** **CAUTION** **RISK OF DAMAGE TO THE MOTOR AND THE DRIVE** • Check that the motor will withstand this current, particularly in the case of permanent magnet synchronous motors, which are susceptible to demagnetization. • Check that the profile mission complies with the derating curve given in the installation manual. **Failure to follow these instructions can result in equipment damage.** Second current limitation. This parameter can be accessed if **[Current limit 2]** (LC2) is not set to **[No]** (nO). The adjustment range is limited to 1.5 In. **Note:** If the setting is less than 0.25 In, the drive may lock in **[Output Phase Loss]** (OPL) fault mode if this has been enabled (see **[Output Phase Loss]** (OPL) page 253). If it is less than the no-load motor current, the motor cannot run.	0 to 1.5 In (1)	1.5 In (1)
CL1 ★ ()	**[Current limitation]** **CAUTION** **RISK OF DAMAGE TO THE MOTOR AND THE DRIVE** • Check that the motor will withstand this current, particularly in the case of permanent magnet synchronous motors, which are susceptible to demagnetization. • Check that the profile mission complies with the derating curve given in the installation manual. **Failure to follow these instructions can result in equipment damage.** First current limitation. This parameter can be accessed if **[Current limit 2]** (LC2) is not set to **[No]** (nO). The adjustment range is limited to 1.5 In. **Note:** If the setting is less than 0.25 In, the drive may lock in **[Output Phase Loss]** (OPL) fault mode if this has been enabled (see **[Output Phase Loss]** (OPL) page 253). If it is less than the no-load motor current, the motor cannot run.	0 to 1.5 In (1)	1.5 In (1)

(1) In corresponds to the rated drive current indicated in the Installation manual and on the drive nameplate.

★ These parameters only appear if the corresponding function has been selected in another menu. When the parameters can also be accessed and adjusted from within the configuration menu for the corresponding function, their description is detailed in these menus, on the pages indicated, to aid programming.

() Parameter that can be modified during operation or when stopped.

Parameters described in this page can be accessed by: DRI- > CONF > FULL > FUN- >CLI-

DYN CURRENT LIMIT

The DTM ATV32, is available with SoMove to set the **BMP** motors. To install the Altivar 32 DTM (device type manager), you can download and install our FDT (field device tool): SoMove lite on www.schneider-electric.com.

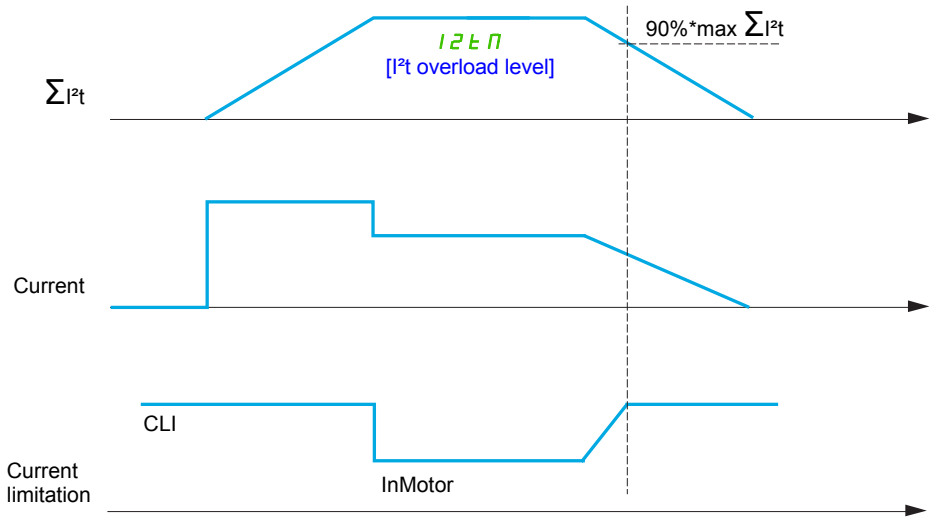

Code	Name / Description	Adjustment range	Factory setting
FUn-	**[APPLICATION FUNCT.] (continued)**		
I2t-	**[DYN CURRENT LIMIT]**		
I2tA ★ nO YES	**[I²t model activation]** I²t model activation for current limitation **[No]** (nO): **[Yes]** (YES): when i²t ⩾ Max∑i²t, **[I²t overload level]** (I2tM) = 100 and current limitation is set to InMotor when i²t ⩽ Max∑i²t*90%, **[I²t overload level]** (I2tM) ⩽ 90 and the current limitation is set to CLI This parameter can be accessed if **[max time of I²tl]** (I2tt) is not set to **[0.00]** (0.00)		**[No]** (nO)
I2tI	**[max current of I²tl]** Maximum current of I²t model.		1.5 In +1 (1)
I2tt	**[max time of I²tl]** Maximum time of I²t model.	0.00 to 655.35	**[0.00]** (0.00)

(1) In corresponds to the rated drive current indicated in the Installation manual or on the drive nameplate.

★ These parameters only appear if the corresponding function has been selected in another menu. When the parameters can also be accessed and adjusted from within the configuration menu for the corresponding function, their description is detailed in these menus, on the pages indicated, to aid programming.

LINE CONTACTOR COMMAND

The line contactor closes every time a run command (forward or reverse) is sent and opens after every stop, as soon as the drive is locked. For example, if the stop mode is stop on ramp, the contactor will open when the motor reaches zero speed.

Note: The drive control power supply must be provided via an external 24 V source.

Example circuit:

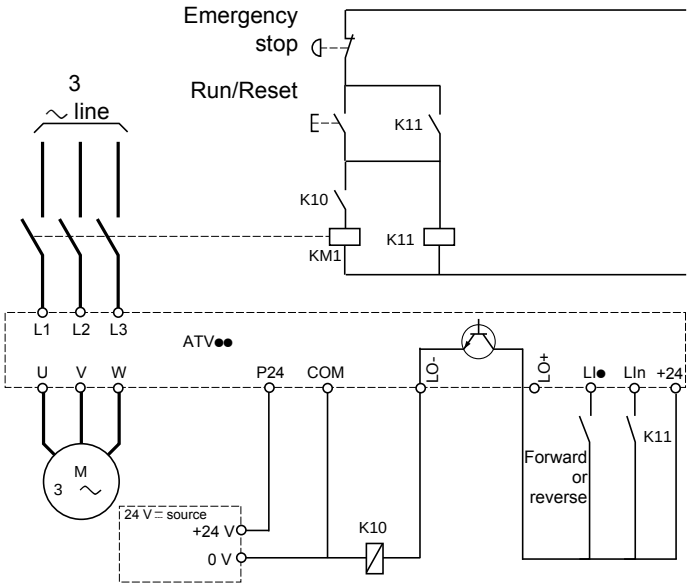

24 V power supply

Note: The "Run/Reset" key must be pressed once the "Emergency stop" key has been released.

LI● = Run command **[Forward]** (F r d) or **[Reverse]** (r r S)

LO-/LO+ = **[Line contactor ass.]** (L L C)

LIn = **[Drive lock]** (L E S)

CAUTION
RISK OF DAMAGE TO THE MOTOR This function can only be used for a small number of consecutive operations with a cycle time longer than 60 s (in order to avoid premature aging of the filter capacitor charging circuit). **Failure to follow these instructions can result in equipment damage.**

Parameters described in this page can be accessed by: DRI- > CONF > FULL > FUN- >LLC-

Code	Name / Description	Adjustment range	Factory setting
FUn-	**[APPLICATION FUNCT.] (continued)**		
LLC-	**[LINE CONTACTOR COMMAND]**		
LLC	**[Line contactor ass.]** Logic output or control relay. nO **[No]** (nO): Function not assigned (in this case, none of the function parameters can be accessed) LO1 **[LO1]** (LO1): Logical output LO1 r2 **[R2]** (r2): Relay r2 d01 **[d01]** (d01): Analog output AO1 functioning as a logic output. Selection can be made if **[AO1 assignment]** (AO1) page 141 is set to **[No]** (nO)		**[No]** (nO)
LES ★	**[Drive lock]** This parameter can be accessed if **[Line contactor ass.]** (LLC) is not set to **[No]** (nO). The drive locks when the assigned input or bit changes to 0. nO **[No]** (nO): Function inactive LI1 **[LI1]** (LI1): Logical input LI1 ... **[...]** (...): See the assignment conditions on page 150		**[No]** (nO)
LCt ★	**[Mains V. time out]** Monitoring time for closing of line contactor. If, once this time has elapsed, there is no voltage on the drive power circuit, the drive will lock with a **[Line contactor]** (LCF) detected fault.	5 to 999 s	5 s

★ These parameters only appear if the corresponding function has been selected in another menu. When the parameters can also be accessed and adjusted from within the configuration menu for the corresponding function, their description is detailed in these menus, on the pages indicated, to aid programming.

OUTPUT CONTACTOR COMMAND

This allows the drive to control a contactor located between the drive and the motor. The request for the contactor to close is made when a run command is sent. The request for the contactor to open is made when there is no longer any current in the motor.

CAUTION
RISK OF DAMAGE TO THE MOTOR If a DC injection braking function has been configured, it should not be left operating too long in stop mode, as the contactor only opens at the end of braking. **Failure to follow these instructions can result in equipment damage.**

Output contactor feedback

The corresponding logic input should be at 1 when there is no run command and at 0 during operation.

In the event of an inconsistency, the drive trips in FCF2 if the output contactor fails to close (LIx at 1) and in FCF1 if it is stuck (LIx at 0).

The **[Delay to motor run]** (dbS) parameter can be used to delay tripping in fault mode when a run command is sent and the **[Delay to open cont.]** (dAS) parameter delays the detected fault when a stop command is set.

Note: FCF2 (contactor failing to close) can be reset by the run command changing state from 1 to 0 (0 --> 1 --> 0 in 3-wire control).

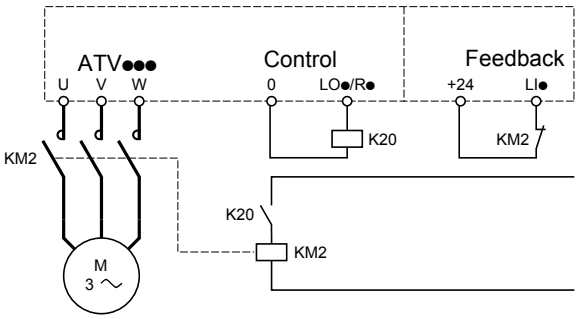

The **[Out. contactor ass.]** (OCC) and **[Output contact. fdbk]** (rCA) functions can be used individually or together.

Code	Name / Description	Adjustment range	Factory setting
FUn-	**[APPLICATION FUNCT.] (continued)**		
OCC-	**[OUTPUT CONTACTOR CMD]**		
OCC	**[Out. contactor ass.]** Logic output or control relay. nO **[No]** (nO): Function not assigned (in this case, none of the function parameters can be accessed) LO1 **[LO1]** (LO1): Logical output LO1 r2 **[R2]** (r2): Relay r2 dO1 **[dO1]** (dO1): Analog output AO1 functioning as a logic output. Selection can be made if **[AO1 assignment]** (AO1) page 141 is set to **[No]** (nO)		**[No]** (nO)
rCA	**[Output contact. fdbk]** The motor starts up when the assigned input or bit changes to 0. nO **[No]** (nO): Function inactive LI1 **[LI1]** (LI1): Logical input LI1 ... **[...]** (...): See the assignment conditions on page 150		**[No]** (nO)
dbS ★ ( )	**[Delay to motor run]** Time delay for: Motor control following the sending of a run command Output contactor state monitoring, if the feedback is assigned. If the contactor fails to close at the end of the set time, the drive will lock in FCF2 mode. This parameter can be accessed if **[Out. contactor ass.]** (OCC) is assigned or if **[Output contact. fdbk]** (rCA) is assigned. The time delay must be greater than the closing time of the output contactor.	0.05 to 60 s	0.15 s
dAS ★ ( )	**[Delay to open cont.]** Time delay for output contactor opening command following motor stop. This parameter can be accessed if **[Output contact. fdbk]** (rCA) is assigned. The time delay must be greater than the opening time of the output contactor. If it is set to 0, the detected fault will not be monitored. If the contactor fails to open at the end of the set time, the drive will lock in FCF1 fault mode.	0 to 5.00 s	0.10 s

★ These parameters only appear if the corresponding function has been selected in another menu. When the parameters can also be accessed and adjusted from within the configuration menu for the corresponding function, their description is detailed in these menus, on the pages indicated, to aid programming.

( ) Parameter that can be modified during operation or when stopped.

POSITIONING BY SENSORS

This function is used for managing positioning using position sensors or limit switches linked to logic inputs or using control word bits:

- Slowing down
- Stopping

The action logic for the inputs and bits can be configured on a rising edge (change from 0 to 1) or a falling edge (change from 1 to 0). The example below has been configured on a rising edge:

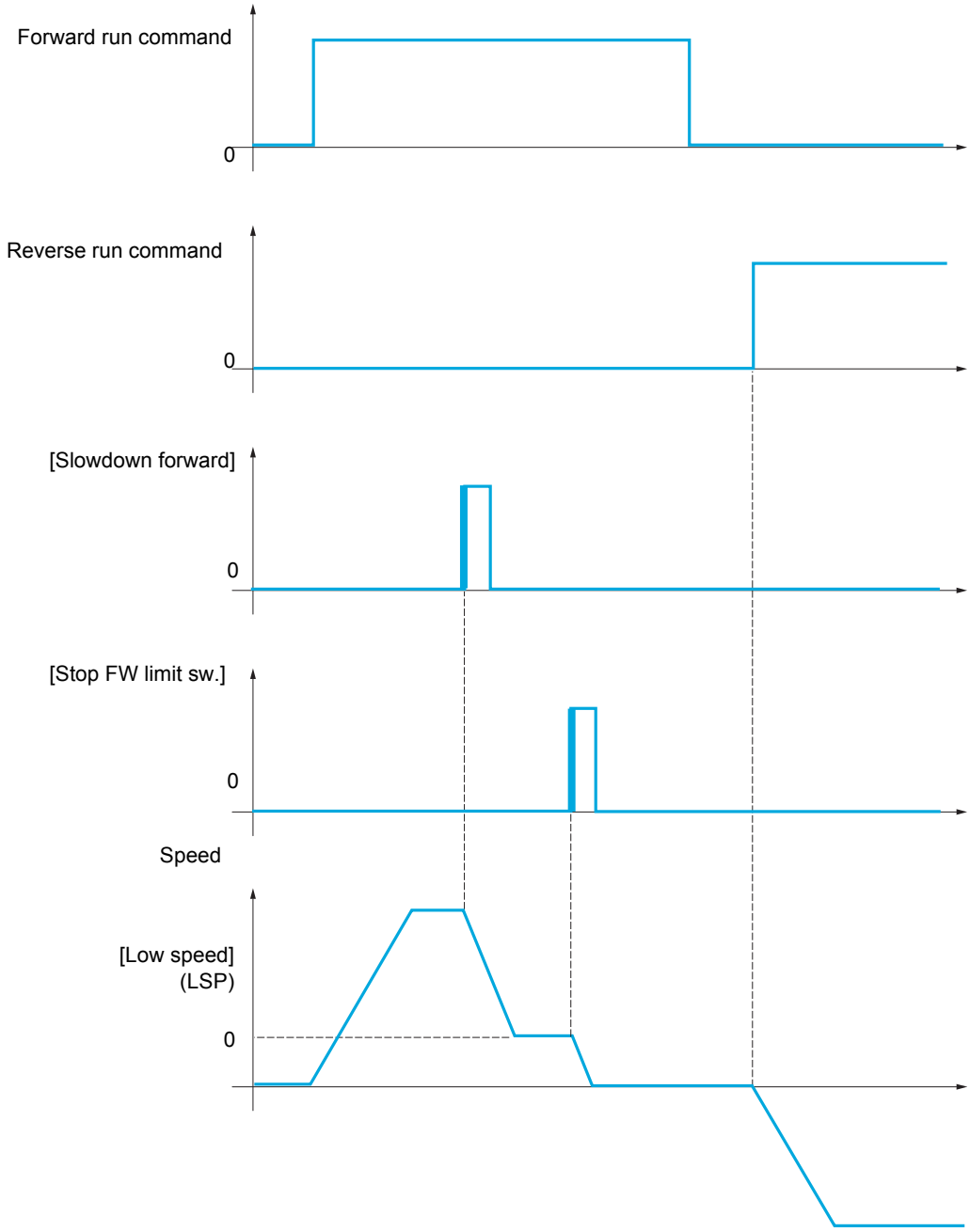

The slowdown mode and stop mode can be configured.

The operation is identical for both directions of operation. Slowdown and stopping operate according to the same logic, described below.

Parameters described in this page can be accessed by: DRI- > CONF > FULL > FUN- > LPO-

Example: Forward slowdown, on rising edge

- Forward slowdown takes place on a rising edge (change from 0 to 1) of the input or bit assigned to forward slowdown if this rising edge occurs in forward operation. The slowdown command is then memorized, even in the event of a power outage. Operation in the opposite direction is authorized at high speed. The slowdown command is deleted on a falling edge (change from 1 to 0) of the input or bit assigned to forward slowdown if this falling edge occurs in reverse operation.
- A bit or a logic input can be assigned to disable this function.
- Although forward slowdown is disabled while the disable input or bit is at 1, sensor changes continue to be monitored and saved.

Example: Positioning on a limit switch, on rising edge

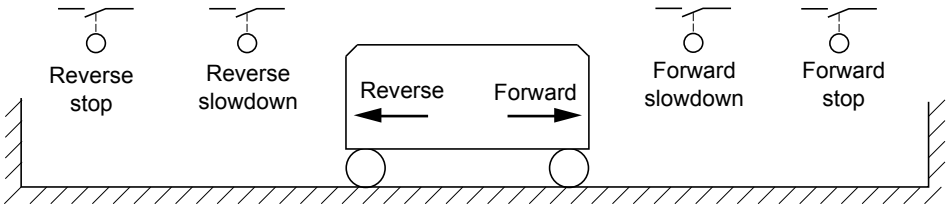

Operation with short cams:

⚠ WARNING

LOSS OF CONTROL
When operating for the first time or after restoring the factory settings, the drive must initially be started outside the slowdown and stop zones in order to initialize the function.
Failure to follow these instructions can result in death, serious injury, or equipment damage.

⚠ WARNING

LOSS OF CONTROL
The current zone is memorized at power off.
In case of manual modification of the system position, the drive must be started at the same position at the next power up of the drive.
Failure to follow these instructions can result in death, serious injury, or equipment damage.

In this instance, when operating for the first time or after restoring the factory settings, the drive must initially be started outside the slowdown and stop zones in order to initialize the function.

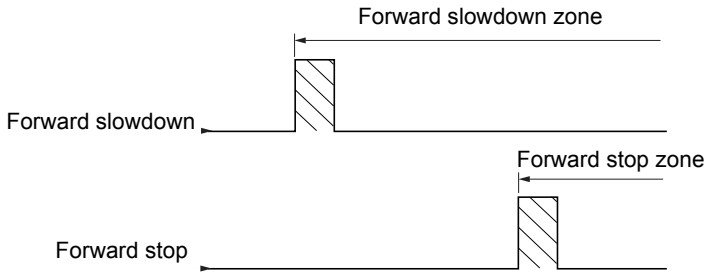

Parameters described in this page can be accessed by: DRI- > CONF > FULL > FUN- > LPO-

Operation with long cams:

In this instance, there is no restriction, which means that the function is initialized across the whole trajectory.

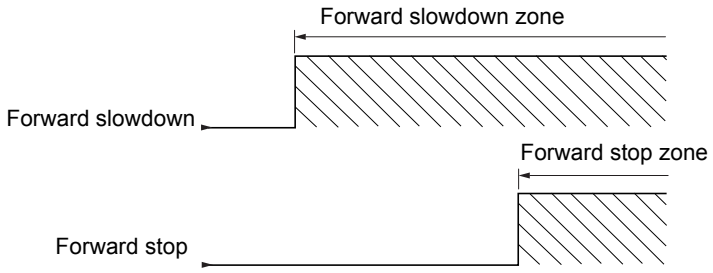

Stop at distance calculated after deceleration limit switch

This function can be used to control the stopping of the moving part automatically once a preset distance has been traveled after the slowdown limit switch.

On the basis of the rated linear speed and the speed estimated by the drive when the slowdown limit switch is tripped, the drive will induce the stop at the configured distance.

This function is useful in applications where one manual-reset overtravel limit switch is common to both directions. It will then only respond to help management if the distance is exceeded. The stop limit switch retains priority in respect of the function.

The **[Deceleration type]** (dSF) parameter can be configured to obtain either of the functions described below:

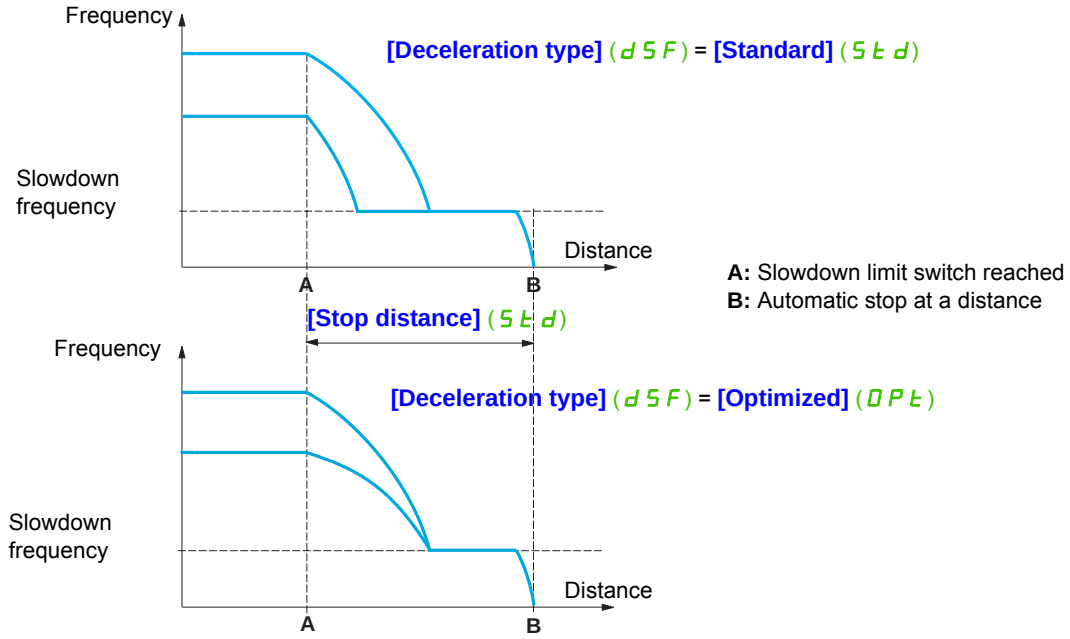

Note:

- If the deceleration ramp is modified while stopping at a distance is in progress, this distance will not be observed.
- If the direction is modified while stopping at a distance is in progress, this distance will not be observed.

⚠ WARNING

LOSS OF CONTROL

- Check that the parameters configured are consistent (in particular, you should check that the required distance is possible).
- This function does not replace the stop limit switch, which remains necessary for safety reasons.

Failure to follow these instructions will result in death, serious injury, or equipment damage.

Code	Name / Description	Adjustment range	Factory setting
FUn-	**[APPLICATION FUNCT.] (continued)**		
LPO-	**[POSITIONING BY SENSORS]** **Note:** This function cannot be used with certain other functions. Follow the instructions on page 160.		
SAF	**[Stop FW limit sw.]** Stop switch forward. nO **[No]** (nO): Not assigned LI1 **[LI1]** (LI1): Logical input LI1 ... **[...]** (...): See the assignment conditions on page 150		**[No]** (nO)
SAr	**[Stop RV limit sw.]** Stop switch reverse. Identical to **[Stop FW limit sw.]** (SAF) above.		**[No]** (nO)
SAL	**[Stop limit config.]** ★ **⚠ WARNING** **LOSS OF CONTROL** If **[Stop limit config.]** (SAL) is set to **[Active high]** (HIG), the stop command will be activated on active signal (stop order will not be given if signal is not applied for any reason). Do not select **[Active high]** (HIG) unless you are sure that your signal will be present in any case. **Failure to follow these instructions can result in death, serious injury, or equipment damage.** Stop switch activation level. This parameter can be accessed if at least one limit switch or one stop sensor has been assigned. It defines the positive or negative logic of the bits or inputs assigned to the stop. LO **[Active low]** (LO): Stop controlled on a falling edge (change from 1 to 0) of the assigned bits or inputs HIG **[Active high]** (HIG): Stop controlled on a rising edge (change from 0 to 1) of the assigned bits or inputs		**[Active low]** (LO)
dAF	**[Slowdown forward]** Slowdown attained forward. Identical to **[Stop FW limit sw.]** (SAF) above.		**[No]** (nO)
dAr	**[Slowdown reverse]** Slowdown attained reverse. Identical to **[Stop FW limit sw.]** (SAF) above.		**[No]** (nO)
dAL	**[Slowdown limit cfg.]** ★ **CAUTION** **RISK OF DAMAGE TO THE EQUIPMENT** If **[Slowdown limit cfg.]** (dAL) is set to **[Active high]** (HIG), the slowdown command will be activated on active signal (slowdown order will not be given if signal is not applied for any reason). Do not select **[Active high]** (HIG) unless you are sure that your signal will be present in any case. **Failure to follow these instructions can result in equipment damage.** This parameter can be accessed if at least one limit switch or one slowdown sensor has been assigned. It defines the positive or negative logic of the bits or inputs assigned to the slowdown. LO **[Active low]** (LO): Slowdown controlled on a falling edge (change from 1 to 0) of the assigned bits or inputs HIG **[Active high]** (HIG): Slowdown controlled on a rising edge (change from 0 to 1) of the assigned bits or inputs		**[Active low]** (LO)

Parameters described in this page can be accessed by: DRI- > CONF > FULL > FUN- > LPO-

Code	Name / Description	Adjustment range	Factory setting
CLS	**[Disable limit sw.]**		**[No]** (nO)
★	**⚠ WARNING** **LOSS OF CONTROL** If **[Disable limit sw.]** (CLS) is set to an input and activated, the limit switch management will be inhibited. Check that this configuration will not endanger personnel or equipment in any way. **Failure to follow these instructions can result in death, serious injury, or equipment damage.** This parameter can be accessed if at least one limit switch or one sensor has been assigned. The action of the limit switches is disabled when the assigned bit or input is at 1. If, at this time, the drive is stopped or being slowed down by limit switches, it will restart up to its speed reference. nO **[No]** (nO): Function inactive LI1 **[LI1]** (LI1): Logical input LI1 ... **[...]** (...): See the assignment conditions on page 150		
PAS	**[Stop type]**		**[Ramp stop]** (rMP)
★	This parameter can be accessed if at least one limit switch or one sensor has been assigned. rMP **[Ramp stop]** (rMP): Follow ramp FSt **[Fast stop]** (FSt): Fast stop (ramp time reduced by **[Ramp divider]** (dCF), see **[Ramp divider]** (dCF) page 91) nSt **[Freewheel]** (nSt): Freewheel stop		
dSF	**[Deceleration type]**		**[Standard]** (Std)
★	This parameter can be accessed if at least one limit switch or one sensor has been assigned. Std **[Standard]** (Std): Uses the **[Deceleration]** (dEC) or **[Deceleration 2]** (dE2) ramp (depending on which has been enabled) OPt **[Optimized]** (OPt): The ramp time is calculated on the basis of the actual speed when the slowdown contact switches, in order to limit the operating time at low speed (optimization of the cycle time: the slowdown time is constant regardless of the initial speed).		
Std	**[Stop distance]**		**[No]** (nO)
★	This parameter can be accessed if at least one limit switch or one sensor has been assigned. Activation and adjustment of the "Stop at distance calculated after the slowdown limit switch" function. nO **[No]** (nO): Function inactive (the next two parameters will, therefore, be inaccessible) - **0.01 to 10.00**: Stop distance range in meters		
nLS	**[Rated linear speed]**	0.20 to 5.00 m/s	1.00 m/s
★	This parameter can be accessed if at least one limit switch or one sensor has been assigned and **[Stop distance]** (Std) is not set to **[No]** (nO). Rated linear speed in meters/second.		
SFd	**[Stop corrector]**	50 to 200%	100%
★	This parameter can be accessed if at least one limit switch or one sensor has been assigned and **[Stop distance]** (Std) is not set to **[No]** (nO). Scaling factor applied to the stop distance to compensate, for example, a non-linear ramp.		
MStP	**[Memo Stop]**		**[No]** (nO)
★	This parameter can be accessed if at least one limit switch or one sensor has been assigned. With or whithout memorisation stop switch nO **[No]** (nO): No memorisation of limit switch YES **[YES]** (YES): Memorisation of limit switch		
PrSt	**[Priority restart]**		**[No]** (nO)
★	This parameter can be accessed if at least one limit switch or one sensor has been assigned. Priority given to the starting even if switch stop is activated. nO **[No]** (nO): No priority restart if stop switch is activated YES **[YES]** (YES): Priority to restart even if stop switch is activated This parameter is forced to [No] (nO) if [Memo Stop] (MStP) is set to [YES] (YES).		

★ These parameters only appear if the corresponding function has been selected in another menu. When the parameters can also be accessed and adjusted from within the configuration menu for the corresponding function, their description is detailed in these menus, on the pages indicated, to aid programming.

Parameters described in this page can be accessed by: DRI- > CONF > FULL > FUN- > LPO-

PARAMETER SET SWITCHING

A set of 1 to 15 parameters from the **[SETTINGS]** (SEt-) menu on page 87 can be selected and 2 or 3 different values assigned. These 2 or 3 sets of values can then be switched using 1 or 2 logic inputs or control word bits. This switching can be performed during operation (motor running).

It can also be controlled on the basis of 1 or 2 frequency thresholds, whereby each threshold acts as a logic input (0 = threshold not reached, 1 = threshold reached).

	Values 1	**Values 2**	**Values 3**
Parameter 1 Parameter 2 Parameter 3 Parameter 4 Parameter 5 Parameter 6 Parameter 7 Parameter 8 Parameter 9 Parameter 10 Parameter 11 Parameter 12 Parameter 13 Parameter 14 Parameter 15	Parameter 1 Parameter 2 Parameter 3 Parameter 4 Parameter 5 Parameter 6 Parameter 7 Parameter 8 Parameter 9 Parameter 10 Parameter 11 Parameter 12 Parameter 13 Parameter 14 Parameter 15	Parameter 1 Parameter 2 Parameter 3 Parameter 4 Parameter 5 Parameter 6 Parameter 7 Parameter 8 Parameter 9 Parameter 10 Parameter 11 Parameter 12 Parameter 13 Parameter 14 Parameter 15	Parameter 1 Parameter 2 Parameter 3 Parameter 4 Parameter 5 Parameter 6 Parameter 7 Parameter 8 Parameter 9 Parameter 10 Parameter 11 Parameter 12 Parameter 13 Parameter 14 Parameter 15
Input LI or bit or frequency threshold 2 values	0	1	0 or 1
Input LI or bit or frequency threshold 3 values	0	0	1

Note: Do not modify the parameters in the **[SETTINGS]** (SEt-) menu, because any modifications made in this menu (**[SETTINGS]** (SEt-)) will be lost on the next power-up. The parameters can be adjusted during operation in the **[PARAM. SET SWITCHING]** (MLP-) menu, on the active configuration.

Note: Parameter set switching cannot be configured from the integrated display terminal.

Parameters can only be adjusted on the integrated display terminal if the function has been configured previously via the graphic display terminal, by PC Software or via the bus or communication network. If the function has not been configured, the **[PARAM. SET SWITCHING]** (MLP-) menu and the **[SET 1]** (PS1-), **[SET 2]** (PS2-), **[SET 3]** (PS3-) submenus will not appear.

Code	Name / Description	Adjustment range	Factory setting
FUn-	**[APPLICATION FUNCT.] (continued)**		
MLP-	**[PARAM. SET SWITCHING]**		
CHA1	**[2 parameter sets]** Switching 2 parameter sets. nO **[No]** (nO): Not assigned FtA **[Freq. Th.att.]** (FtA): Switching via **[Freq. threshold]** (Ftd) page 249 F2A **[Freq. Th. 2 attained]** (F2A): Switching via **[Freq. threshold 2]** (F2d) page 249 LI1 **[LI1]** (LI1): Logical input LI1 ... **[...]** (...): See the assignment conditions on page 150		**[No]** (nO)
CHA2	**[3 parameter sets]** Identical to **[2 parameter sets]** (CHA1) page 227. Switching 3 parameter sets. **Note:** In order to obtain 3 parameter sets, **[2 parameter sets]** (CHA1) must also be configured.		**[No]** (nO)
SPS	**[PARAMETER SELECTION]** This parameter can only be accessed on the graphic display terminal if **[2 parameter sets]** (CHA1) is not set to **[No]** (nO). Making an entry in this parameter opens a window containing all the adjustment parameters that can be accessed. Select 1 to 15 parameters using ENT (a ✓ then appears next to the parameter). Parameter(s) can also be deselected using ENT. Example: PARAMETER SELECTION SETTINGS Ramp increment ☑ --------- ☐ --------- ☐ --------- ☑		
MLP-	**[PARAM. SET SWITCHING] (continued)**		
PS1-	**[SET 1]** This parameter can be accessed if at least 1 parameter has been selected in **[PARAMETER SELECTION]**. Making an entry in this parameter opens a settings window containing the selected parameters in the order in which they were selected. With the graphic display terminal: ★ S101 ... S115 RDY Term +0.0 Hz 0.0 A SET1 Acceleration : 9.51 s Deceleration : 9.67 s Acceleration 2 : 12.58 s Deceleration 2 : 13.45 s Begin Acc round: 2.3 s Code Quick ENT → RDY Term +0.0 Hz 0.0 A Acceleration 9.51 s Min = 0.1 Max = 999.9 << >> Quick With the integrated display terminal: Proceed as in the Settings menu using the parameters that appear.		
MLP-	**[PARAM. SET SWITCHING] (continued)**		
PS2-	**[SET 2]** ★ This parameter can be accessed if at least 1 parameter has been selected in **[PARAMETER SELECTION]**. S201 ... S215 Identical to **[SET 1]** (PS1-) page 227.		

Code	Name / Description	Adjustment range	Factory setting
MLP-	**[PARAM. SET SWITCHING] (continued)**		
PS3-	**[SET 3]**		
★	This parameter can be accessed if **[3 parameter sets]** (CHA2) is not **[No]** (nO) and if at least 1 parameter has been selected in **[PARAMETER SELECTION]**. Identical to **[SET 1]** (PS1-) page 227.		
S301 ... S315			

★ These parameters only appear if the corresponding function has been selected in another menu. When the parameters can also be accessed and adjusted from within the configuration menu for the corresponding function, their description is detailed in these menus, on the pages indicated, to aid programming.

Parameter that can be modified during operation or when stopped.

Note: We recommend that a parameter set switching test is carried out while stopped and a check is made to verify that it has been performed correctly.

Some parameters are interdependent and in this case may be restricted at the time of switching.

Interdependencies between parameters must be respected, **even between different sets**.

Example: The highest **[Low speed]** (LSP) must be below the lowest **[High speed]** (HSP).

MULTIMOTORS / MULTICONFIGURATIONS

Motor or configuration switching [MULTIMOTORS/CONFIG.] (MMC -)

The drive may contain up to 3 configurations, which can be saved using the

[FACTORY SETTINGS] (FCS -) menu, page 79.

Each of these configurations can be activated remotely, enabling adaptation to:

- 2 or 3 different motors or mechanisms (multimotor mode)
- 2 or 3 different configurations for a single motor (multiconfiguration mode)

The two switching modes cannot be combined.

Note: The following conditions MUST be observed:

- Switching may only take place when stopped (drive locked). If a switching request is sent during operation, it will not be executed until the next stop.
- In the event of motor switching, the following additional conditions apply:
  - When the motors are switched, the power and control terminals concerned must also be switched as appropriate.
  - The maximum power of the drive must not be exceeded by any of the motors.
- All the configurations to be switched must be set and saved in advance in the same hardware configuration, this being the definitive configuration (option and communication cards). Failure to follow this instruction can cause the drive to lock on an **[Incorrect config.]** (CFF) state.

Menus and parameters switched in multimotor mode

- **[SETTINGS]** (SEt -)
- **[MOTOR CONTROL]** (drC -)
- **[INPUTS / OUTPUTS CFG]** (I_O -)
- **[COMMAND]** (CtL -)
- **[APPLICATION FUNCT.]** (Fun -) with the exception of the **[MULTIMOTORS/CONFIG.]** function (to be configured once only)
- **[FAULT MANAGEMENT]** (FLt)
- **[MY MENU]**
- **[USER CONFIG.]**: The name of the configuration specified by the user in the **[FACTORY SETTINGS]** (FCS -) menu

Menus and parameters switched in multiconfiguration mode

As in multimotor mode, except for the motor parameters that are common to the 3 configurations:

- Rated current
- Thermal current
- Rated voltage
- Rated frequency
- Rated speed
- Rated power
- IR compensation
- Slip compensation
- Synchronous motor parameters
- Type of thermal protection
- Thermal state
- The auto-tuning parameters and motor parameters that can be accessed in expert mode
- Type of motor control

Note: No other menus or parameters can be switched.

Parameters described in this page can be accessed by: DRI- > CONF > FULL > FUN- > MMC-

Transfer of a drive configuration to another one, with graphic display terminal, when the drive uses [MULTIMOTORS/CONFIG.] (MMC-) function

Let A be the source drive and B the drive addressed. In this example, switching is controlled by logic input.

1. Connect graphic display terminal to the drive A.
2. Put logic input LI ([2 Configurations] (CnF1)) and LI ([3 Configurations] (CnF2)) to 0.
3. Download configuration 0 in a file of graphic display terminal (example: file 1 of the graphic display terminal).
4. Put logic input LI ([2 Configurations] (CnF1)) to 1 and leave logic input LI ([3 Configurations] (CnF2)) to 0.
5. Download configuration 1 in a file of graphic display terminal (example: file 2 of the graphic display terminal).
6. Put logic input LI ([3 Configurations] (CnF2)) to 1 and leave logic input LI ([2 Configurations] (CnF1)) to 1.
7. Download configuration 2 in a file of graphic display terminal (example: file 3 of the graphic display terminal).
8. Connect graphic display terminal to the drive B.
9. Put logic input LI ([2 Configurations] (CnF1)) and LI ([3 Configurations] (CnF2)) to 0.
10. Make a factory setting of the drive B.
11. Download the configuration file 0 in the drive (file 1 of graphic display terminal in this example).
12. Put logic input LI ([2 Configurations] (CnF1)) to 1 and leave logic input LI ([3 Configurations] (CnF2)) to 0.
13. Download the configuration file 1 in the drive (file 2 of graphic display terminal in this example).
14. Put logic input LI ([3 Configurations] (CnF2)) to 1 and leave logic input LI ([2 Configurations] (CnF1)) to 1.
15. Download the configuration file 2 in the drive (file 3 of graphic display terminal in this example).

Note: Steps 6, 7, 14 et 15 are necessary only if [MULTIMOTORS/CONFIG.] (MMC-) function is used with 3 configurations or 3 motors.

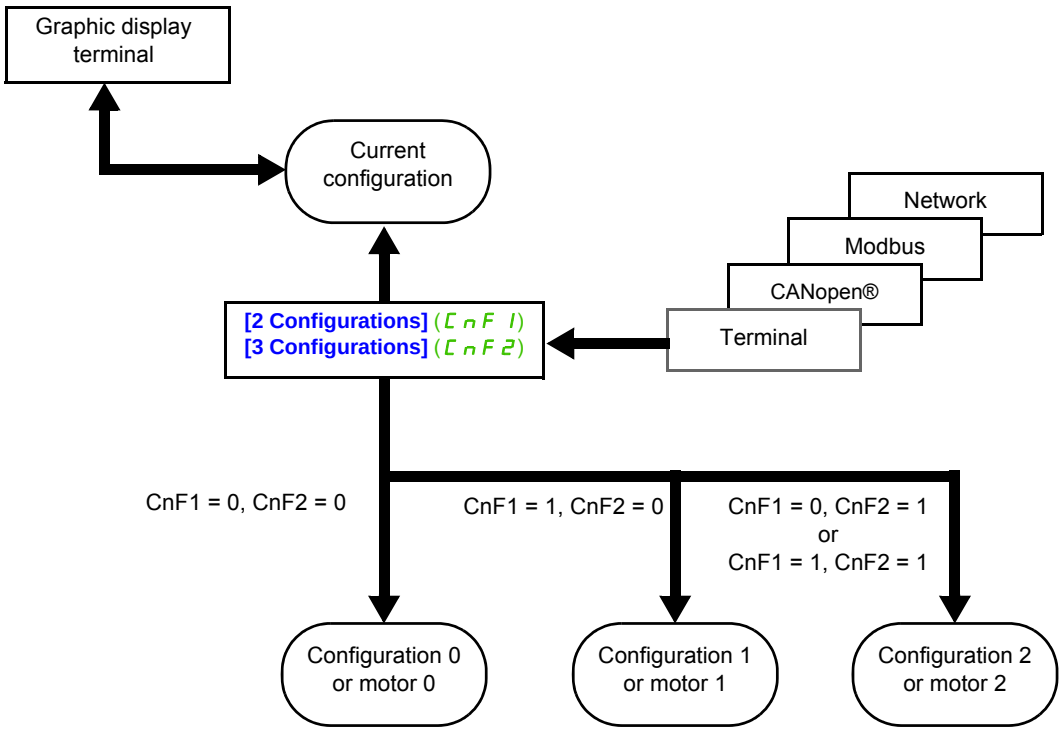

Parameters described in this page can be accessed by: DRI- > CONF > FULL > FUN- > MMC-

Switching command

Depending on the number of motors or selected configurations (2 or 3), the switching command is sent using one or two logic inputs. The table below lists the possible combinations.

LI 2 motors or configurations	LI 3 motors or configurations	Number of configurations or active motors
0	0	0
1	0	1
0	1	2
1	1	2

Schematic diagram for multimotor mode

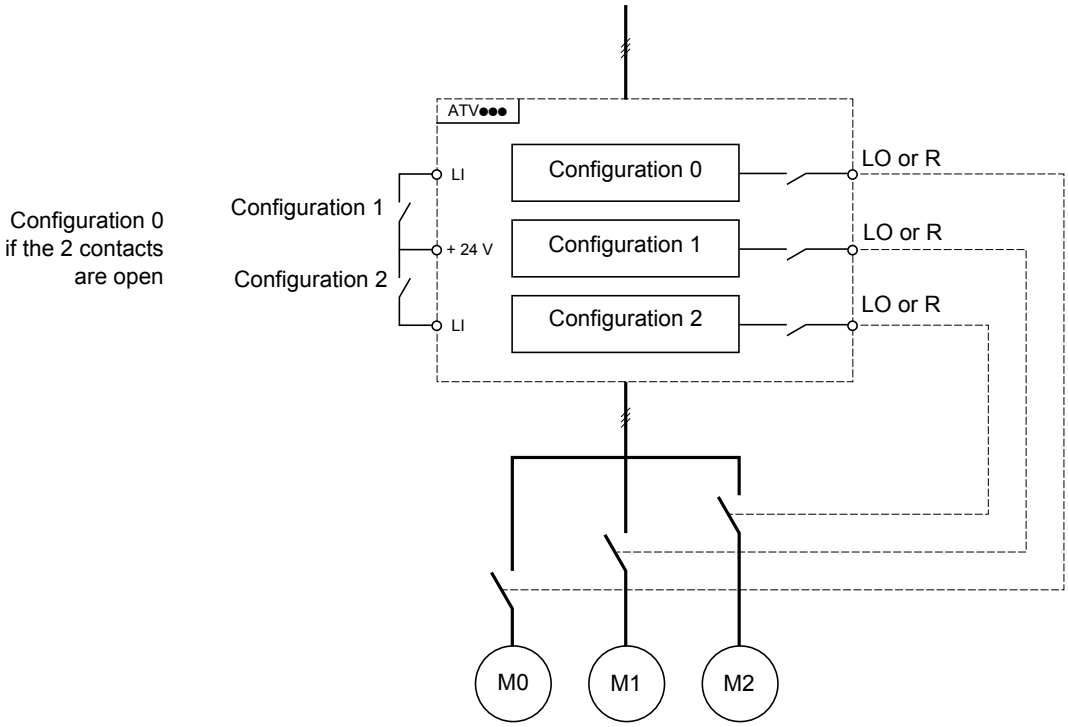

Auto-tuning in multimotor mode

This auto-tuning can be performed:

- Manually using a logic input when the motor changes.
- Automatically each time the motor is activated for the 1st time after switching on the drive, if the **[Automatic autotune]** (AUt) parameter on page 106 is set to **[Yes]** (YES).

Motor thermal states in multimotor mode:

The drive helps to protect the three motors individually. Each thermal state takes into account all stop times, if the drive power is not switched off.

Configuration information output

CAUTION
RISK OF DAMAGE TO THE MOTOR The motor thermal state of each motor is not memorized when power is switched off. To continue to protect the motors, it is required to: • Perform auto-tuning on each motor every time the power is switched on, or • Use an external overload protection on each motor. **Failure to follow these instructions can result in equipment damage.**

In the **[INPUTS / OUTPUTS CFG]** (I _ O -) menu, a logic output can be assigned to each configuration or motor (2 or 3) for remote information transmission.

Note: As the **[INPUTS / OUTPUTS CFG]** (I _ O -) menu is switched, these outputs must be assigned in all configurations in which information is required.

Code	Name / Description	Adjustment range	Factory setting
F U n -	**[APPLICATION FUNCT.] (continued)**		
M M C -	**[MULTIMOTORS/CONFIG.]**		
C H M	**[Multimotors]**		**[No]** (n O)
	CAUTION **RISK OF DAMAGE TO THE MOTOR** When **[Multimotors]** (C H M) is set to **[Yes]** (Y E S), the motor thermal state of each motor is not memorized when power is switched off. To continue to protect the motors, it is required to : • Perform auto-tuning on each motor every time the power is switched on, or • Use an external overload protection on each motor. **Failure to follow these instructions can result in equipment damage.**		
n O	**[No]** (n O): Multiconfiguration possible		
Y E S	**[Yes]** (Y E S): Multimotor possible		
C n F 1	**[2 Configurations]** Switching of 2 motors or 2 configurations.		**[No]** (n O)
n O	**[No]** (n O): No switching		
L I 1	**[LI1]** (L I 1): Logical input LI1		
. . .	**[...]** (. . .): See the assignment conditions on page 150		
C n F 2	**[3 Configurations]** Switching of 3 motors or 3 configurations. Identical to **[2 Configurations]** (C n F 1) page 232. **Note:** In order to obtain 3 motors or 3 configurations, **[2 Configurations]** (C n F 1) must also be configured.		**[No]** (n O)

AUTO TUNING BY LOGIC INPUT

Code	Name / Description	Adjustment range	Factory setting
FUn -	**[APPLICATION FUNCT.] (continued)**		
tnL -	**[AUTO TUNING BY LI]**		
tUL	**[Auto-tune assign.]** Auto-tuning is performed when the assigned input or bit changes to 1. **Note:** Auto-tuning causes the motor to start up. nO **[No]** (nO): Not assigned LI1 **[LI1]** (LI1): Logical input LI1 ... **[...]** (...): See the assignment conditions on page 150		**[No]** (nO)

TRAVERSE CONTROL

Function for winding reels of yarn (in textile applications):

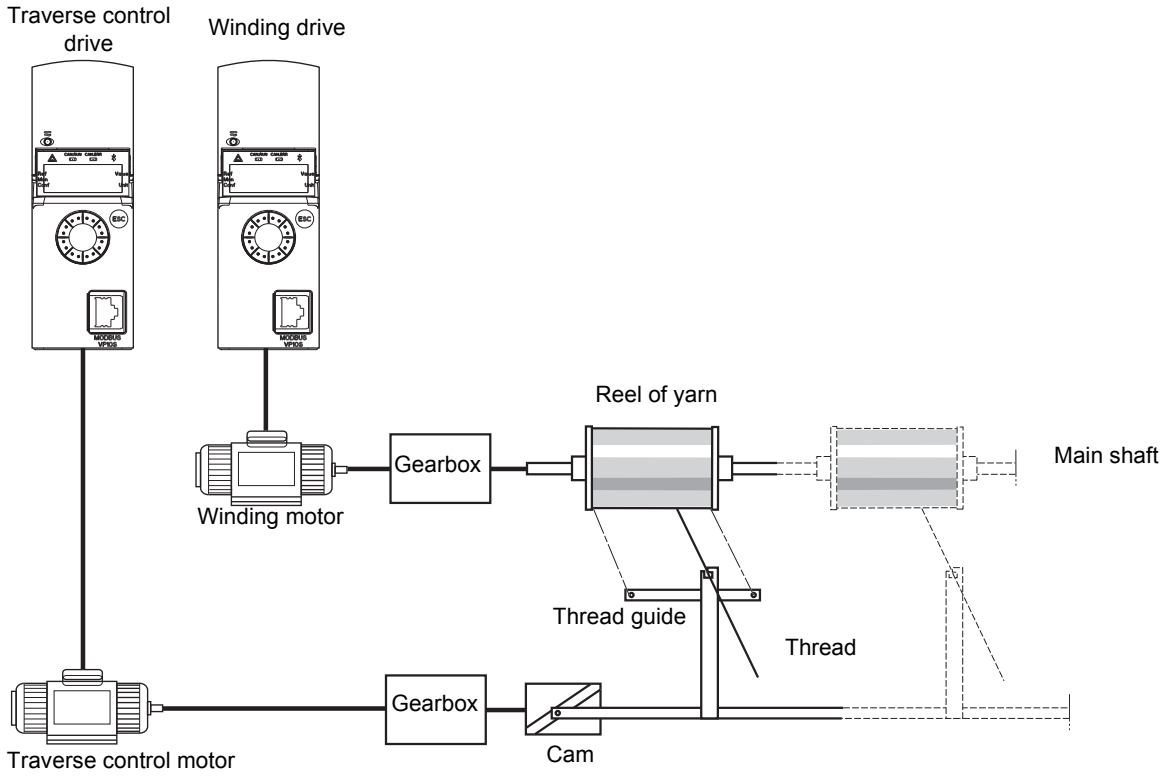

The speed of rotation of the cam must follow a precise profile to ensure that the reel is steady, compact and linear:

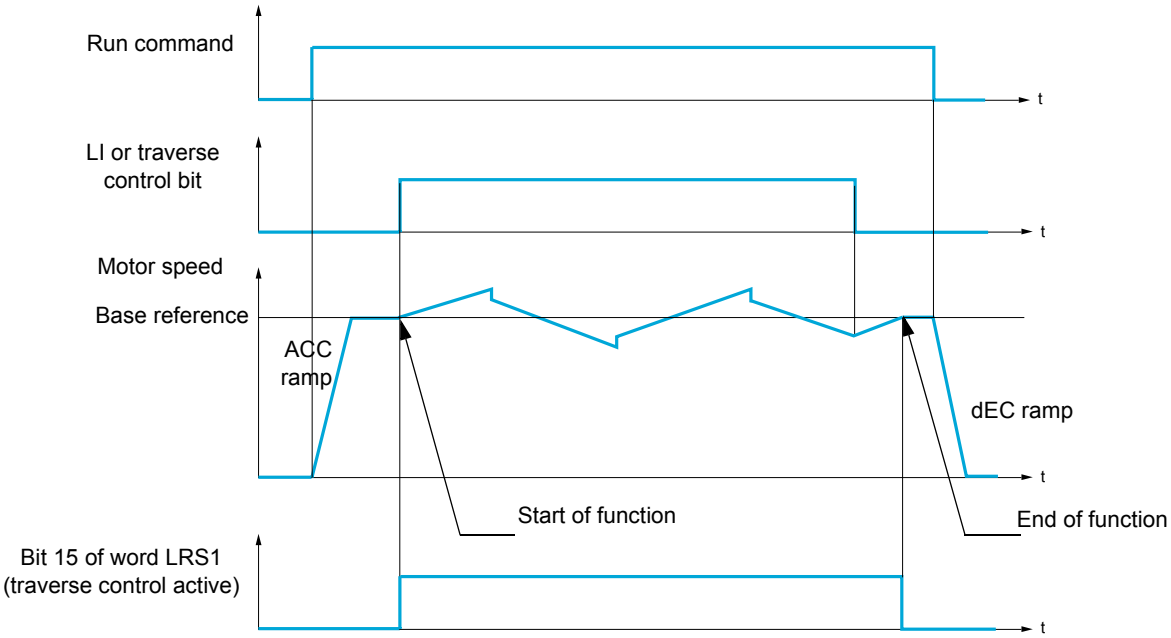

The function starts when the drive has reached its base reference and the traverse control command has been enabled.

When the traverse control command is disabled, the drive returns to its base reference, following the ramp determined by the traverse control function. The function then stops, as soon as it has returned to this reference.

Bit 15 of word LRS1 is at 1 while the function is active.

Function parameters

These define the cycle of frequency variations around the base reference, as shown in the diagram below:

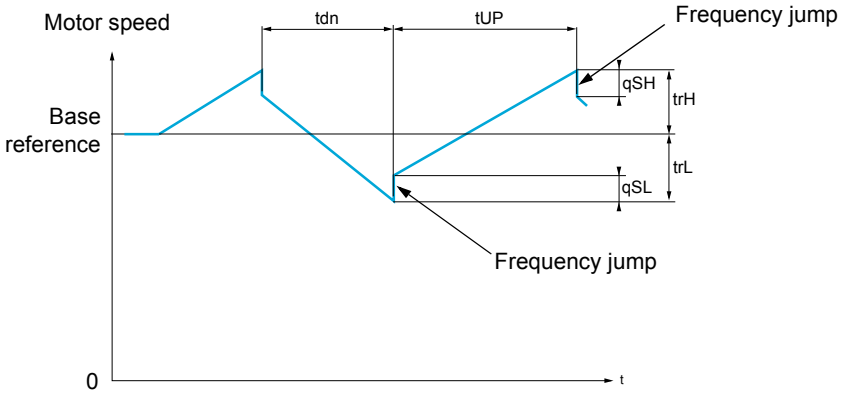

trC	**[Yarn control]** (trC): Assignment of the traverse control command to a logic input or to a communication bus control word bit
trH	**[Traverse freq. high]** (trH): in Hertz
trL	**[Traverse Freq. Low]** (trL): in Hertz
qSH	**[Quick step High]** (qSH): in Hertz
qSL	**[Quick step Low]** (qSL): in Hertz
tUP	**[Traverse ctrl. accel.]** (tUP): time, in seconds
tdn	**[Traverse ctrl. decel]** (tdn): time, in seconds

Reel parameters:

tbO	**[Reel time]** (tbO): Time taken to make a reel, in minutes. This parameter is intended to signal the end of winding. When the traverse control operating time since command **[Yarn control]** (trC) reaches the value of **[Reel time]** (tbO), the logic output or one of the relays changes to state 1, if the corresponding function **[End reel]** (EbO) has been assigned. The traverse control operating time EbOt can be monitored online by a communication bus.
dtF	**[Decrease ref. speed]** (dtF): Decrease in the base reference. In certain cases, the base reference has to be reduced as the reel increases in size. The **[Decrease ref. speed]** (dtF) value corresponds to time **[Reel time]** (tbO). Once this time has elapsed, the reference continues to fall, following the same ramp. If low speed **[Low speed]** (LSP) is at 0, the speed reaches 0 Hz, the drive stops and must be reset by a new run command. If low speed **[Low speed]** (LSP) is not 0, the traverse control function continues to operate above **[Low speed]** (LSP). 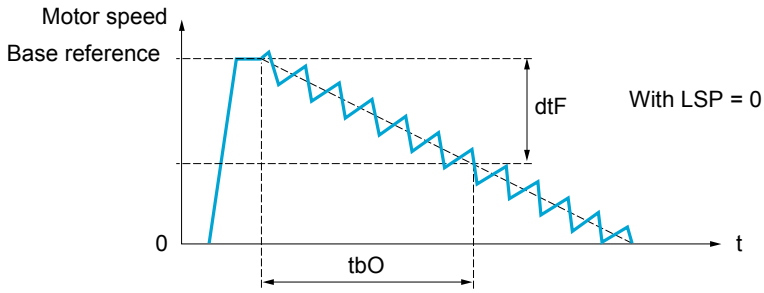 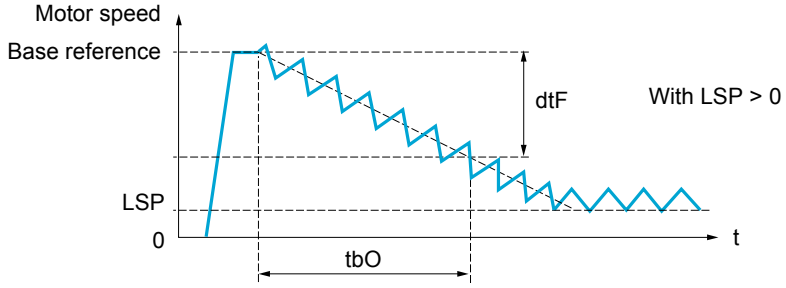

rtr	**[Init. traverse ctrl]** Reinitialize traverse control. This command can be assigned to a logic input or to a communication bus control word bit. It resets the EbO alarm and the EbOt operating time to 0 and reinitializes the reference to the base reference. As long as rtr remains at 1, the traverse control function is disabled and the speed remains the same as the base reference. This command is used primarily when changing reels. 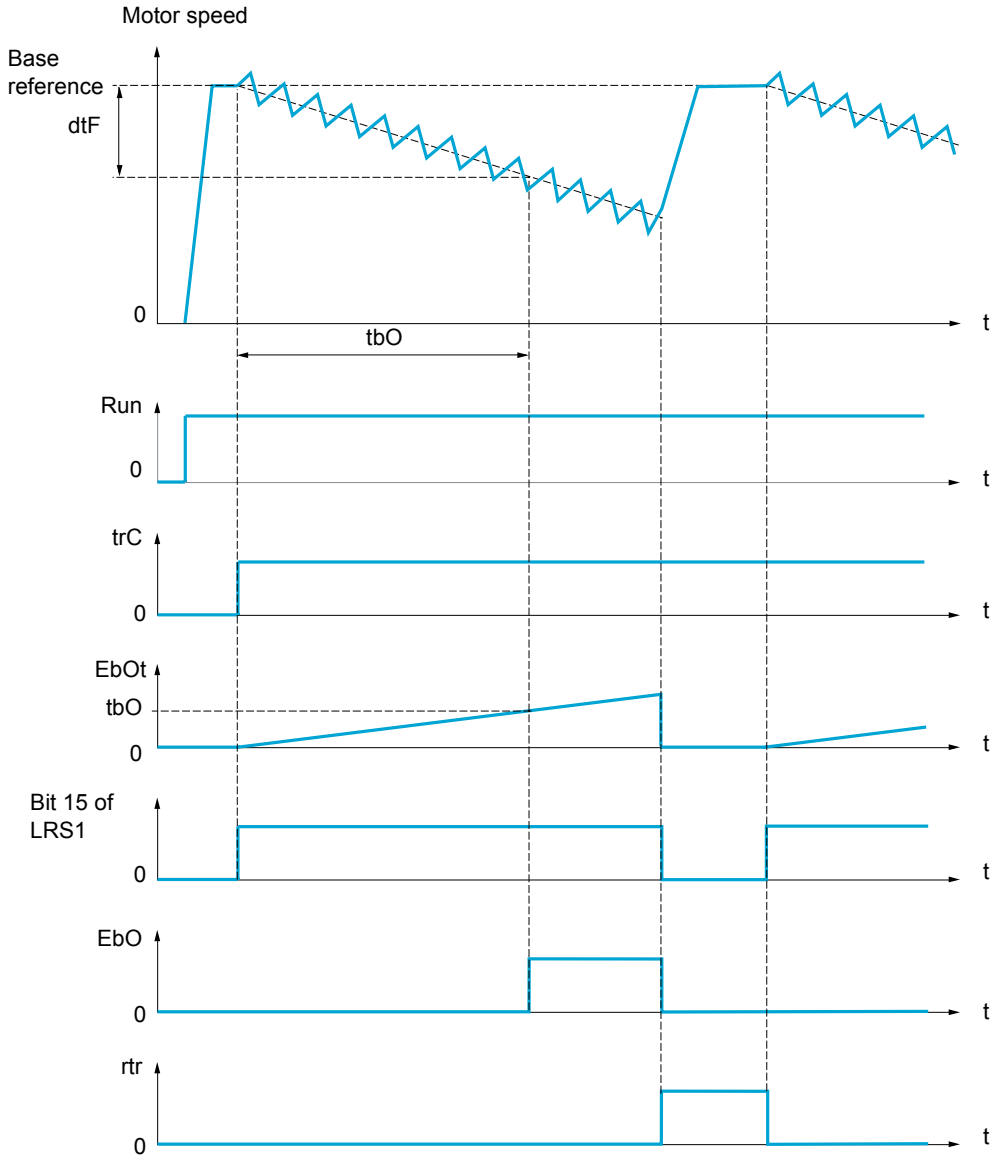

Parameters described in this page can be accessed by: DRI- > CONF > FULL > FUN- > TRO-

Counter wobble

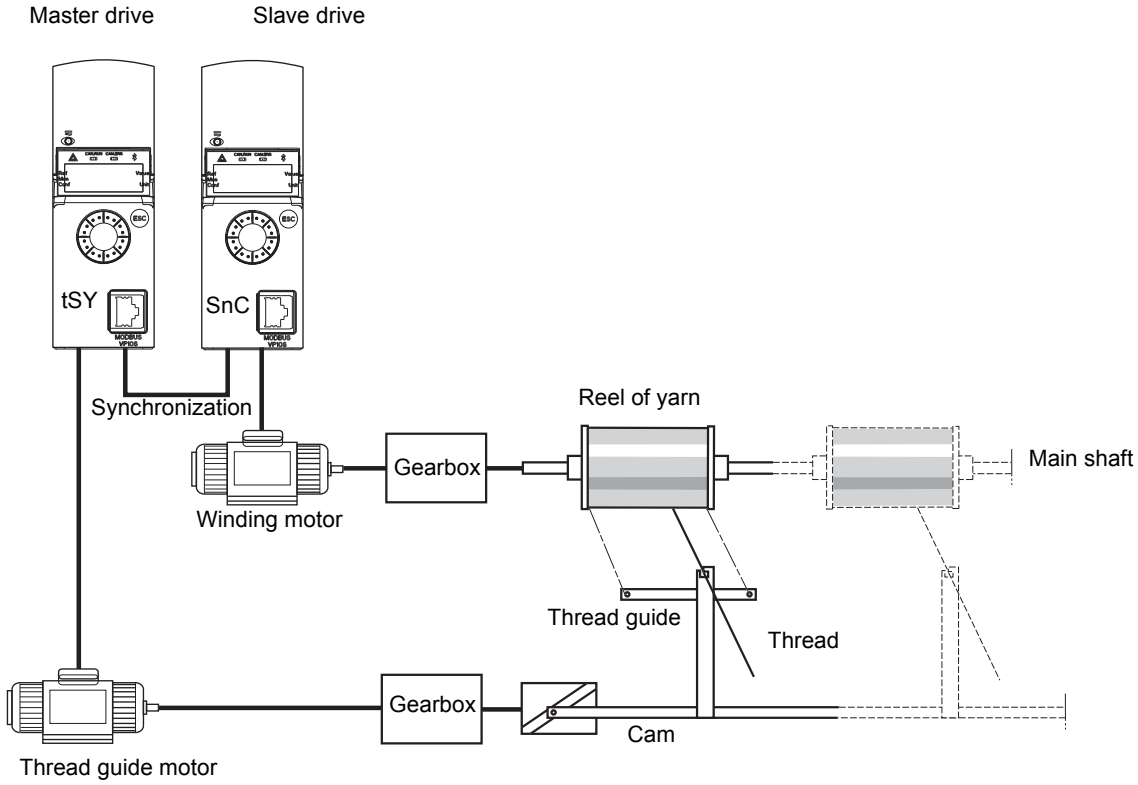

The Counter wobble function is used in certain applications to obtain a constant yarn tension when the Traverse control function is producing considerable variations in speed on the yarn guide motor (**[Traverse freq. high]** (trH) and **[Traverse Freq. low]** (trL), see **[Traverse freq. high]** (trH) page 239).

Two motors must be used (one master and one slave).

The master controls the speed of the yarn guide, the slave controls the winding speed. The function assigns the slave a speed profile, which is in antiphase to that of the master. This means that synchronization is required, using one of the master's logic outputs and one of the slave's logic inputs.

Parameters described in this page can be accessed by: DRI- > CONF > FULL > FUN- > TRO-

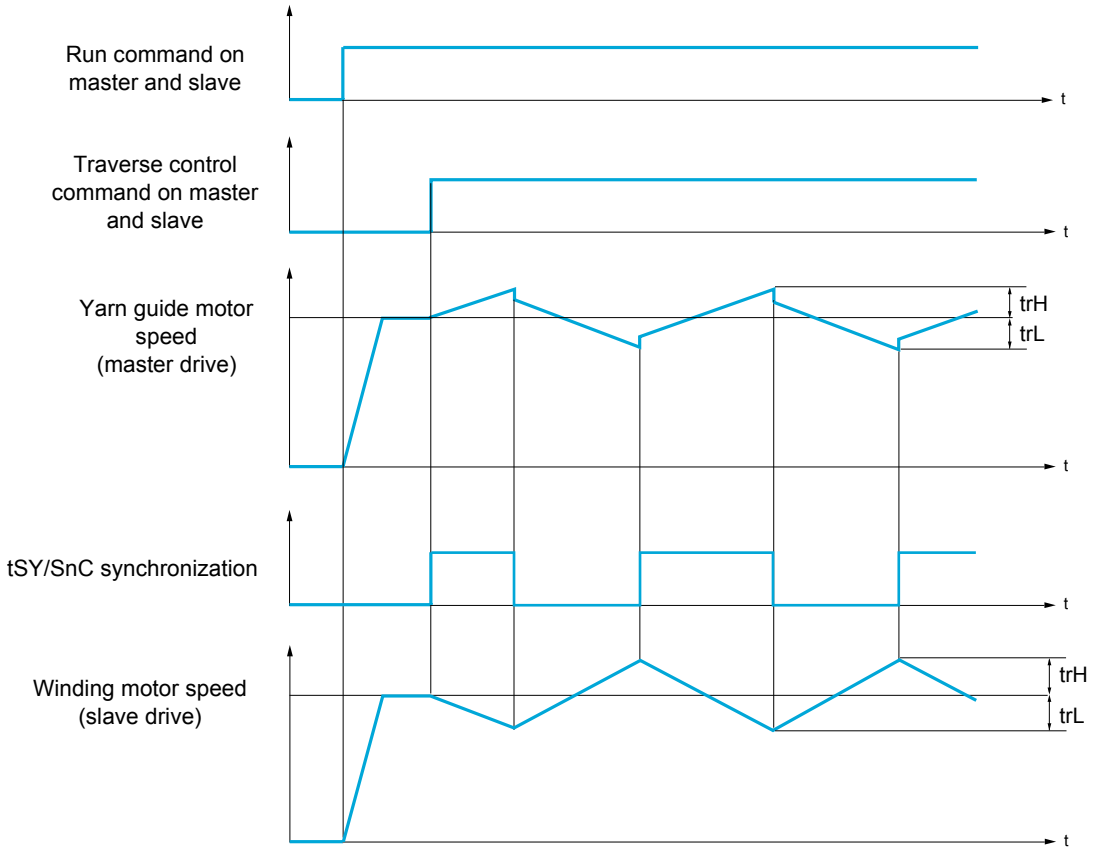

Connection of synchronization I/O

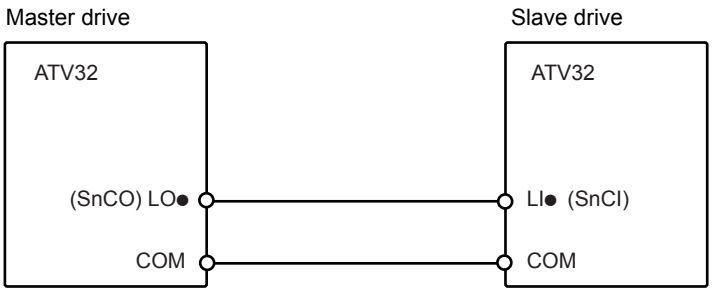

The starting conditions for the function are:

- Base speeds reached on both drives
- **[Yarn control]** (trC) input activated
- Synchronization signal present

Note: The **[Quick step High]** (9SH) and **[Quick step Low]** (9SL) parameters should generally be kept at 0.

Parameters described in this page can be accessed by: DRI- > CONF > FULL > FUN- > TR0-

Code	Name / Description	Adjustment range	Factory setting
FUn-	**[APPLICATION FUNCT.] (continued)**		
tr0-	**[TRAVERSE CONTROL]** **Note:** This function cannot be used with certain other functions. Follow the instructions on page 160.		
trC	**[Yarn control]** The Traverse control cycle starts when the assigned input or bit changes to 1 and stops when it changes to 0. nO **[No]** (nO): Function inactive, thereby helping to prevent access to other parameters LI1 **[LI1]** (LI1): Logical input LI1 ... **[...]** (...): See the assignment conditions on page 150		**[No]** (nO)
trH ★ (1)	**[Traverse freq. high]** Traverse frequency high.	0 to 10 Hz	4 Hz
trL ★ (1)	**[Traverse Freq. Low]** Traverse frequency low.	0 to 10 Hz	4 Hz
qSH ★ (1)	**[Quick step High]** Quick step high.	0 to **[Traverse freq. high]** (trH)	0 Hz
qSL ★ (1)	**[Quick step Low]** Quick step low.	0 to **[Traverse Freq. Low]** (trL)	0 Hz
tUP ★	**[Traverse ctrl. accel.]** Acceleration traverse control.	0.1 to 999.9 s	4 s
tdn ★	**[Traverse ctrl. decel]** Deceleration traverse control.	0.1 to 999.9 s	4 s
tb0 ★	**[Reel time]** Reel execution time.	0 to 9,999 min	0 min
Eb0 ★	**[End reel]** The assigned output or relay changes to state 1 when the traverse control operating time reaches the **[Reel time]** (tb0). nO **[No]** (nO): Not assigned LO1 **[LO1]** (LO1): Logical output LO1 r2 **[R2]** (r2): Relay R2 dO1 **[dO1]** (dO1): Analog output AO1 functioning as a logic output. Selection can be made if **[AO1 assignment]** (AO1) page 141 is set to **[No]** (nO).		**[No]** (nO)

Code	Name / Description	Adjustment range	Factory setting
SnC ★	**[Counter wobble]** Synchronization input. To be configured on the winding drive (slave) only. nO **[No]** (nO): Function inactive, thereby helping to prevent access to other parameters LI1 **[LI1]** (LI1): Logical input LI1 ... **[...]** (...): See the assignment conditions on page 150		**[No]** (nO)
tSY ★	**[Sync. wobble]** Synchronization output. To be configured on the yarn guide drive (master) only. nO **[No]** (nO): Function not assigned LO1 **[LO1]** (LO1) r2 **[R2]** (r2) dO1 **[dO1]** (dO1): Analog output AO1 functioning as a logic output. Selection can be made if **[AO1 assignment]** (AO1) page 141 is set to **[No]** (nO).		**[No]** (nO)
dtF ★ ( )	**[Decrease ref. speed]** Decrease in the base reference during the traverse control cycle.	0 to 599 Hz	0 Hz
rtr ★	**[Init. traverse ctrl]** When the state of the assigned input or bit changes to 1, the traverse control operating time is reset to 0, along with **[Decrease ref. speed]** (dtF). nO **[No]** (nO): Function not assigned LI1 **[LI1]** (LI1): Logical input LI1 ... **[...]** (...): See the assignment conditions on page 150		**[No]** (nO)

(1) The parameter can also be accessed in the **[SETTINGS]** (SEt-) menu.

★ These parameters only appear if the corresponding function has been selected in another menu. When the parameters can also be accessed and adjusted from within the configuration menu for the corresponding function, their description is detailed in these menus, on the pages indicated, to aid programming.

( ) Parameter that can be modified during operation or when stopped.

HIGH SPEED SWITCHING

Code	Name / Description	Adjustment range	Factory setting
FUn -	**[APPLICATION FUNCT.] (continued)**		
CHS -	**[HSP SWITCHING]**		
SH2	**[2 High speed]** High Speed Switching. nO **[No]** (nO): Function not assigned FtA **[Freq. Th. attain.]** (FtA): Frequency threshold attained F2A **[Freq. Th. 2 attained]** (F2A): Frequency threshold 2 attained LI1 **[LI1]** (LI1): Logical input LI1 ... **[...]** (...): See the assignment conditions on page 150		**[No]** (nO)
SH4	**[4 High speed]** High Speed Switching. **Note:** In order to obtain 4 High speed, **[2 High speed]** (SH2) must also be configured. Identical to **[2 High speed]** (SH2) page 241.		**[No]** (nO)
HSP (↻)	**[High speed]** Motor frequency at maximum reference, can be set between **[Low speed]** (LSP) and **[Max frequency]** (tFr). The factory setting changes to 60 Hz if **[Standard mot. freq]** (bFr) is set to **[60Hz NEMA]** (60).	0 to 599 Hz	50 Hz
HSP2 ★ (↻)	**[High speed 2]** Visible if **[2 High speed]** (SH2) is not set to **[No]** (nO). Identical to **[High speed]** (HSP) page 241.	0 to 599 Hz	50 Hz
HSP3 ★ (↻)	**[High speed 3]** Visible if **[4 High speed]** (SH4) is not set to **[No]** (nO). Identical to **[High speed]** (HSP) page 241.	0 to 599 Hz	50 Hz
HSP4 ★ (↻)	**[High speed 4]** Visible if **[4 High speed]** (SH4) is not set to **[No]** (nO). Identical to **[High speed]** (HSP) page 241.	0 to 599 Hz	50 Hz

★ These parameters only appear if the corresponding function has been selected in another menu. When the parameters can also be accessed and adjusted from within the configuration menu for the corresponding function, their description is detailed in these menus, on the pages indicated, to aid programming.

(↻) Parameter that can be modified during operation or when stopped.

Parameters described in this page can be accessed by: DRI- > CONF > FULL>DCC-

DC Bus

Code	Name / Description	Adjustment range	Factory setting
FUn-	**[APPLICATION FUNCT.]**		
dCC-	**[DC Bus]**		
dCCM	**[DC-Bus chaining]** DC Bus chaining configuration nO **[No]** (nO): Not assigned MAIn **[Bus & Main]** (MAIn): The drive is supplied by both DC Bus and Line. bUS **[Only Bus]** (bUS): The drive is supplied by DC Bus only. Line is not wired. **⚠⚠DANGER** **LOSS OF PERSONNEL AND EQUIPMENT PROTECTION** Enabling **[DC-Bus chaining]** (dCCM) to **[Bus & Main]** (MAIn) will disable the ground fault detection on ATV32HU55N4 … HD15N4. • Do not select this configuration unless external ground fault protection exists for each of these drives. **Failure to follow these instructions will result in death or serious injury.**		**[No]** (nO)
dCCC	**[DC-Bus compat.]** DC Bus chaining compatibility Visible if **[DC-Bus chaining]** (dCCM) above is not set to **[No]** (nO). AtU **[Altivar]** (AtU): Only Altivar 32 drives are on the DC Bus chain. LHM **[Lexium]** (LHM): At least one Lexium 32 drive is on the DC Bus chain. ★ - For ATV●●●M2, not depending on **[DC-Bus compat.]** (dCCC) the parameters **[Mains voltage]** (UrES), **[Undervoltage level]** (USL), **[Braking level]** (Ubr) are forced to their default value. - For ATV●●●N4, if **[DC-Bus compat.]** (dCCC) is set to **[Altivar]** (AtU) the parameters **[Mains voltage]** (UrES), **[Undervoltage level]** (USL), **[Braking level]** (Ubr) are forced to their default value. For ATV●●●N4, if **[DC-Bus compat.]** (dCCC) is set to **[Lexium]** (LHM) the parameters **[Mains voltage]** (UrES), **[Undervoltage level]** (USL) are forced to their default value, **[Braking level]** (Ubr) is forced to 780 Vdc and the drive will trip in **[Overbraking]** (ObF) at a DC Bus level of 820 Vdc instead of 880 Vdc to be compatible with Lexium 32 drives.		[Altivar] (AtU)
IPL	**[Input phase loss]** Drive behaviour in case of input phase loss detected fault. ★ Cannot be accessed if drive rating is ATV●●●M2. Visible if **[3.1 ACCESS LEVEL]** (LAC) is set to **[Expert]** (EPr) and **[DC-Bus chaining]** (dCCM) above is set to **[No]** (nO). nO **[Ignore]** (nO): Detected fault ignored YES **[Freewheel]** (YES): Detected fault with freewheel stop **[Input phase loss]** (IPL) is forced to **[Ignore]** (nO) if **[DC-Bus chaining]** (dCCM) above is set to **[Only Bus]** (bUS). See **[Input phase loss]** (IPL) in the Programming Manual (DRI- > CONF > FULL > FLT- > IPL-).		According to drive rating.

Parameters described in this page can be accessed by: DRI- > CONF > FULL>DCC-

SCL3	**[Ground short circuit]** Direct ground short-circuit fault detection behaviour Can be accessed for drives rating ATV32HU55N4 … HD15N4. Visible if **[3.1 ACCESS LEVEL]** (LAC) is set to **[Expert]** (EPr) and **[DC-Bus chaining]** (dCCM) above is not set to **[No]** (nO). nO **[Ignore]** (nO): Detected fault ignored YES **[Freewheel]** (YES): Detected fault with freewheel stop **[Ground short circuit]** (SCL3) is forced to **[Ignore]** (nO) for ATV32HU55N4 … HD15N4 drives if **[DC-Bus chaining]** (dCCM) above is set to **[Bus & Main]** (MAIn). **Note**: If **[Ground short circuit]** (SCL3) is set to **[Ignore]** (nO), integrated safety functions (except Safe Torque Off) for ATV32HU55N4 … HD15N4 drives cannot be used, otherwise the drive will trip in **[Safe function fault]** (SAFF) state. ★ **⚠ ⚠ DANGER** **LOSS OF PERSONNEL AND EQUIPMENT PROTECTION** Enabling **[Ground short circuit]** (SCL3) to **[No]** (No) will disable the ground fault detection. • Do not select this configuration unless external ground fault protection exists for each of these drives. **Failure to follow these instructions will result in death or serious injury.**	**[Freewheel]** (YES)
UrES	**[Mains Voltage]** Rated voltage of the line supply in Vac. ★ Visible if **[3.1 ACCESS LEVEL]** (LAC) is set to **[Expert]** (EPr) and **[DC-Bus chaining]** (dCCM) above is set to **[No]** (nO). For ATV32●●●M2: 200 **[200V ac]** (200): 200 Volts AC 220 **[220V ac]** (220): 220 Volts AC 230 **[230V ac]** (230): 230 Volts AC 240 **[240V ac]** (240): 240 Volts AC (factory setting) LHM **[Lexium]** (LHM): **[Mains voltage]** (UrES), **[Undervoltage level]** (USL), **[Braking level]** (Ubr) are forced to their default value. For ATV32●●●N4: 380 **[380V ac]** (380): 380 Volts AC 400 **[400V ac]** (400): 400 Volts AC 440 **[440V ac]** (440): 440 Volts AC 460 **[460V ac]** (460): 460 Volts AC 500 **[500V ac]** (500): 500 Volts AC (factory setting) LHM **[Lexium]** (LHM): **[Mains voltage]** (UrES), **[Undervoltage level]** (USL) are forced to their default value, **[Braking level]** (Ubr) is forced to 780 Vdc and the drive will trip in **[Overbraking]** (ObF) at a DC Bus level of 820 Vdc instead of 880 Vdc	According to drive voltage rating According to drive voltage rating

Parameters described in this page can be accessed by:

USL ★	**[Undervoltage level]** Undervoltage fault level setting in Volts.	100 to 276 Vac	According to drive rating
	Visible if **[3.1 ACCESS LEVEL]** (LAC) is set to **[Expert]** (EPr), **[DC-Bus chaining]** (dCCM) above is set to **[No]** (nO) and **[Mains voltage]** (UrES) is not set to **[Lexium]** (LHM). The factory setting is determined by the drive voltage rating : - For ATV32●●●M2 : 141 Vac - For ATV32●●●N4 : 276 Vac The adjustment range is determined by the **[Mains voltage]** (UrES) value. See **[Undervoltage level]** (USL) in the Programming Manual (DRI- > CONF > FULL > FLT- > USB-).		
Ubr ★ ( )	**[Braking level]** Braking transistor command level.	335 to 820 Vdc	According to drive rating
	Visible if **[3.1 ACCESS LEVEL]** (LAC) is set to **[Expert]** (EPr) and **[DC-Bus chaining]** (dCCM) above is set to **[No]** (nO). The factory setting is determined by the drive voltage rating : - For ATV32●●●M2 : 395 Vdc - For ATV32●●●N4 : 820 Vdc The adjustment range is determined by the **[Mains voltage]** (UrES) value. See **[Braking level]** (Ubr) in the Programming Manual (DRI- > CONF > FULL > DRC-).		

( ) Parameter that can be modified during operation or when stopped.

★ These parameters only appear if the corresponding function has been selected in another menu. When the parameters can also be accessed and adjusted from within the configuration menu for the corresponding function, their description is detailed in these menus, on the pages indicated, to aid programming.

Parameters described in this page can be accessed by: DRI- > CONF > FULL > FUN- > FLT- > PTC-

Fault Management

With integrated display terminal:

Summary of functions:

Code	Name	Page
PtC	[PTC MANAGEMENT]	247
rSt	[FAULT RESET]	247
Atr	[AUTOMATIC RESTART]	249
AIS	[ALARMS SETTING]	249
FLr	[CATCH ON THE FLY]	250
tHt	[MOTOR THERMAL PROT.]	252
OPL	[OUTPUT PHASE LOSS]	253
IPL	[INPUT PHASE LOSS]	253
OHL	[DRIVE OVERHEAT]	254
SAt	[THERMAL ALARM STOP]	255
EtF	[EXTERNAL FAULT]	255
USb	[UNDERVOLTAGE MGT]	256
tIt	[IGBT TESTS]	257
LFL	[4-20mA LOSS]	257
InH	[FAULT INHIBITION]	258
CLL	[COM. FAULT MANAGEMENT]	258
Sdd	[ENCODER FAULT]	260
tId	[TORQUE OR I LIM. DETECT]	261
FqF	[FREQUENCY METER]	263
dLd	[DYNAMIC LOAD DETECT.]	264
tnF	[AUTO TUNING FAULT]	265
PPI	[CARDS PAIRING]	266
ULd	[PROCESS UNDERLOAD]	267
OLd	[PROCESS OVERLOAD]	269
LFF	[FALLBACK SPEED]	269
FSt	[RAMP DIVIDER]	270
dCI	[DC INJECTION]	270

From ConF menu

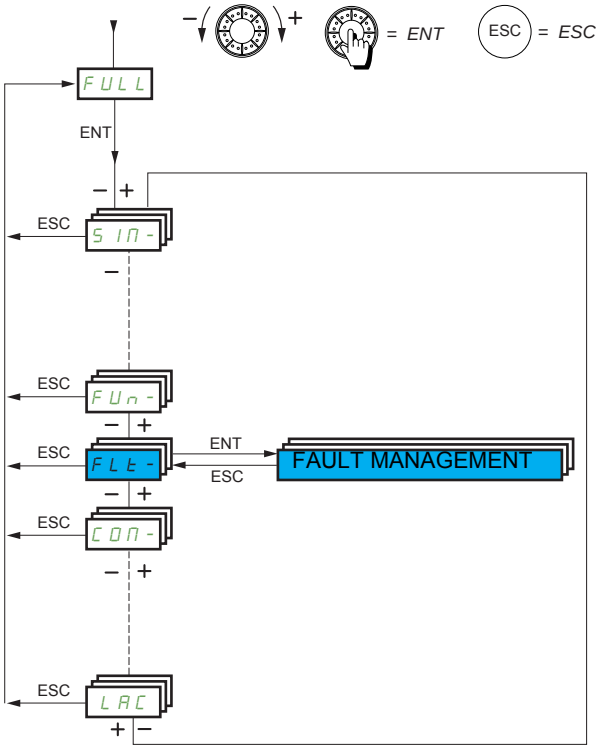

The parameters in the **[FAULT MANAGEMENT]** (FLt-) menu can only be modified when the drive is stopped and there is no run command, except for parameters with a symbol in the code column, which can be modified with the drive running or stopped.

Parameters described in this page can be accessed by: DRI- > CONF > FULL > FLT- > ATR-

PTC probe

1 set of PTC probe can be managed by the drive in order to help to protect the motor: on logic input LI6 converted for this use by switch SW2 on the control block.

The PTC probe is monitored for the following detected faults:

- Motor overheating
- Sensor break
- Sensor short-circuit

Protection via PTC probe does not disable protection via I^2t calculation performed by the drive (the two types of protection can be combined).

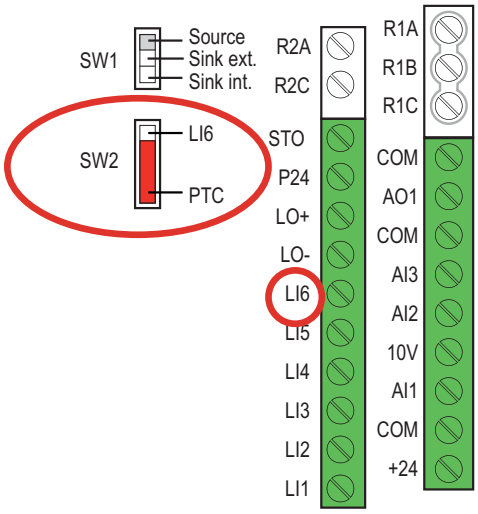

Code	Name / Description	Adjustment range	Factory setting
FULL	**[FULL] (continued)**		
FLt-	**[FAULT MANAGEMENT]**		
PtC-	**[PTC MANAGEMENT]**		
PtCL	**[LI6 = PTC probe]** Check first that the switch SW2 on the control block is set to PTC. nO **[No]** (nO): Not used AS **[Always]** (AS): PTC probe are monitored permanently, even if the power supply is not connected (as long as the control remains connected to the power supply) rdS **[Power ON]** (rdS): PTC probe are monitored while the drive power supply is connected rS **[Motor ON]** (rS): PTC probe are monitored while the motor power supply is connected		**[No]** (nO)
FLt-	**[FAULT MANAGEMENT] (continued)**		
rSt-	**[FAULT RESET]**		
rSF	**[Fault reset]** Detected faults are cleared manually when the assigned input or bit changes to 1, if the cause of the detected fault has disappeared. The STOP/RESET key on the graphic display terminal performs the same function. Following detected faults can be cleared manually : ASF, brF, bLF, CnF, COF, dLF, EPF1, EPF2, FbES, FCF2, InF9, InFA, InFb, LCF, LFF3, ObF, OHF, OLC, OLF, OPF1, OPF2, OSF, OtFL, PHF, PtFL, SCF4, SCF5, SLF1, SLF2, SLF3, SOF, SPF, SSF, tJF, tnF and ULF. **Note:** If [Reset restricted fault configuration] (HrFC) is set to [Yes] (YES), the additional following detected fault can be cleared manually: OCF, SCF1, SCF3. See page 248 nO **[No]** (nO): Function inactive LI1 **[Yes]** (YES): Logical input LI1 ... **[...]** (...): See the assignment conditions on page 150		**[No]** (nO)

Parameters described in this page can be accessed by: DRI- > CONF > FULL > FLT- > RST-

Code	Name / Description	Adjustment range	Factory setting
rPA	**[Product reset assig.]**		**[No]** (nO)
★	**⚠ DANGER** **UNINTENDED EQUIPMENT OPERATION** This configuration enables to reset the drive. Check this action will not endanger personnel or equipment in any way. **Failure to follow these instructions will result in death or serious injury.** This parameter can only be modified if **[3.1 ACCESS LEVEL]** (LAC) is set to **[Expert]** (EPr) mode. Drive reinitialization via logic input. Can be used to reset all detected faults without having to disconnect the drive from the power supply. The drive is reinitialized on a rising edge (change from 0 to 1) of the assigned input. The drive can only be reinitialized when locked. To assign reinitialization, press and hold down the ENT key for 2 s.		
nO	**[No]** (nO): Function inactive		
LI1	**[LI1]** (LI1): Logical input LI1		
...	**...**		
LI6	**[LI6]** (LI6): Logical input LI6		
LAI1	**[LAI1]** (LAI1): Logical input AI1		
LAI2	**[LAI2]** (LAI2): Logical input AI2		
OL01	**[OL01]** (OL01): Function blocks: Logical Output 01		
...	**...**		
OL10	**[OL10]** (OL10): Function blocks: Logical Output 10		
rP	**[Product reset]**		**[No]** (nO)
★	**⚠ DANGER** **UNINTENDED EQUIPMENT OPERATION** You are going to reset the drive. Check this action will not endanger personnel or equipment in any way. **Failure to follow these instructions will result in death or serious injury.** This parameter can only be accessed if **[3.1 ACCESS LEVEL]** (LAC) is set to **[Expert]** (EPr) mode. Drive reinitialization. Can be used to reset all detected faults without having to disconnect the drive from the power supply.		
nO	**[No]** (nO): Function inactive		
YES	**[Yes]** (YES): Reinitialization. Press and hold down the ENT key for 2 s. The parameter changes back to **[No]** (nO) automatically as soon as the operation is complete. The drive can only be reinitialized when locked.		
HrFC	**[Reset restricted fault configuration]**		**[No]** (nO)
★	This parameter can only be accessed if **[3.1 ACCESS LEVEL]** (LAC) is set to **[Expert]** (EPr) mode. Can be used to select the access level of [Fault reset] (rSF) to reset detected faults without having to disconnect the drive from the power supply. see page 247 **Note**: If **[Reset restricted fault configuration]** (HrFC) is set to **[Yes]** (YES), the additional following detected fault can be cleared manually: OCF, SCF1, SCF3.		
nO	**[No]** (nO): Function inactive		
YES	**[Yes]** (YES): Function active		

Parameters described in this page can be accessed by: DRI- > CONF > FULL > FLT- > THT-

Code	Name / Description	Adjustment range	Factory setting
FLt -	**[FAULT MANAGEMENT] (continued)**		
Atr -	**[AUTOMATIC RESTART]**		
Atr	**[Automatic restart]**		[No] (nO)
2 s	**⚠ DANGER** **UNINTENDED EQUIPMENT OPERATION** • The automatic restart can only be used on machines or installations which do not pose any danger to either personnel or equipment. • If the automatic restart is activated, R1 will only indicate a fault has been detected once the time-out period for the restart sequence has expired. • The equipment must be used in compliance with national and regional safety regulations. **Failure to follow these instructions will result in death or serious injury.**		
	The drive fault relay remains activated if this function is active. The speed reference and the operating direction must be maintained. Use 2-wire control ([2/3 wire control] (tCC) is set to [2 wire] (2C) and [2 wire type] (tCt) is set to [Level] (LEL), see [2/3 wire control] (tCC) page 83). If the restart has not taken place once the configurable time tAr has elapsed, the procedure is aborted and the drive remains locked until it is turned off and then on again. The fault codes, which permit this function, are listed on page 309.		
nO	[No] (nO): Function inactive		
YES	[Yes] (YES): Automatic restart, after locking in fault state, if the detected fault has disappeared and the other operating conditions permit the restart. The restart is performed by a series of automatic attempts separated by increasingly longer waiting periods: 1 s, 5 s, 10 s, then 1 minute for the following attempts.		
tAr	**[Max. restart time]**		[5 minutes] (5)
★	This parameter appears if [Automatic restart] (Atr) is set to [Yes] (YES). It can be used to limit the number of consecutive restarts on a recurrent detected fault.		
5	[5 min] (5): 5 minutes		
10	[10 minutes] (10): 10 minutes		
30	[30 minutes] (30): 30 minutes		
1h	[1 hour] (1h): 1 hour		
2h	[2 hours] (2h): 2 hours		
3h	[3 hours] (3h): 3 hours		
Ct	[Unlimited] (Ct): Unlimited		
FLt -	**[FAULT MANAGEMENT] (continued)**		
ALS -	**[ALARM SETTING]**		
Ctd	**[Current threshold]**	0 to 1.5 In (1)	INV
(1)	Motor current threshold.		
Ftd	**[Freq. threshold]**	0 to 599 Hz	50 Hz
	Motor frequency threshold.		
F2d	**[Freq. threshold 2]**	0 to 599 Hz	50 Hz
	Motor frequency threshold.		
ttH	**[High torque thd.]**	-300 to 300%	100%
	High torque frequency threshold.		
ttL	**[Low torque thd.]**	-300 to 300%	50%
	Low torque frequency threshold.		

Parameters described in this page can be accessed by: DRI- > CONF > FULL > FLT- >THT-

Code	Name / Description	Adjustment range	Factory setting
F9L ★	**[Pulse warning thd.]** Frequency level. Visible if **[Frequency meter]** (F9F) is not **[No]** (nO).	0 to 20,000 Hz	0 Hz
FLt-	**[FAULT MANAGEMENT] (continued)**		
FLr-	**[CATCH ON THE FLY]** **Note:** This function cannot be used with certain other functions. Follow the instructions on page 159.		
FLr	**[Catch on the fly]** Used to enable a smooth restart if the run command is maintained after the following events: - Loss of line supply or disconnection. - Clearance of current detected fault or automatic restart. - Freewheel stop. The speed given by the drive resumes from the estimated speed of the motor at the time of the restart, then follows the ramp to the reference speed. This function requires 2-wire level control. When the function is operational, it activates at each run command, resulting in a slight delay of the current (0.5 s max). **[Catch on the fly]** (FLr) is forced to **[No]** (nO) if brake logic control **[Brake assignment]** (bLC) is assigned (page 191) or if **[Auto DC injection]** (AdC) is set to **[Continuous]** (Ct) page 173 . nO **[No]** (nO): Function inactive YES **[Yes]** (YES): Function active		**[No]** (nO)

(1) In corresponds to the rated drive current indicated in the Installation manual and on the drive nameplate.

★ These parameters only appear if the corresponding function has been selected in another menu. When the parameters can also be accessed and adjusted from within the configuration menu for the corresponding function, their description is detailed in these menus, on the pages indicated, to aid programming.

Parameter that can be modified during operation or when stopped.

2 s To change the assignment of this parameter, press the ENT key for 2 s.

Parameters described in this page can be accessed by: DRI- > CONF > FULL > FLT-

Motor thermal protection

Function

Thermal protection by calculating the I²t.

Note: The motor thermal state is not saved when the drive is switched off.

- Self-cooled motors: The tripping curves depend on the motor frequency.
- Force-cooled motors: Only the 50 Hz tripping curve needs to be considered, regardless of the motor frequency.

The following curves represent the trip time in seconds:.

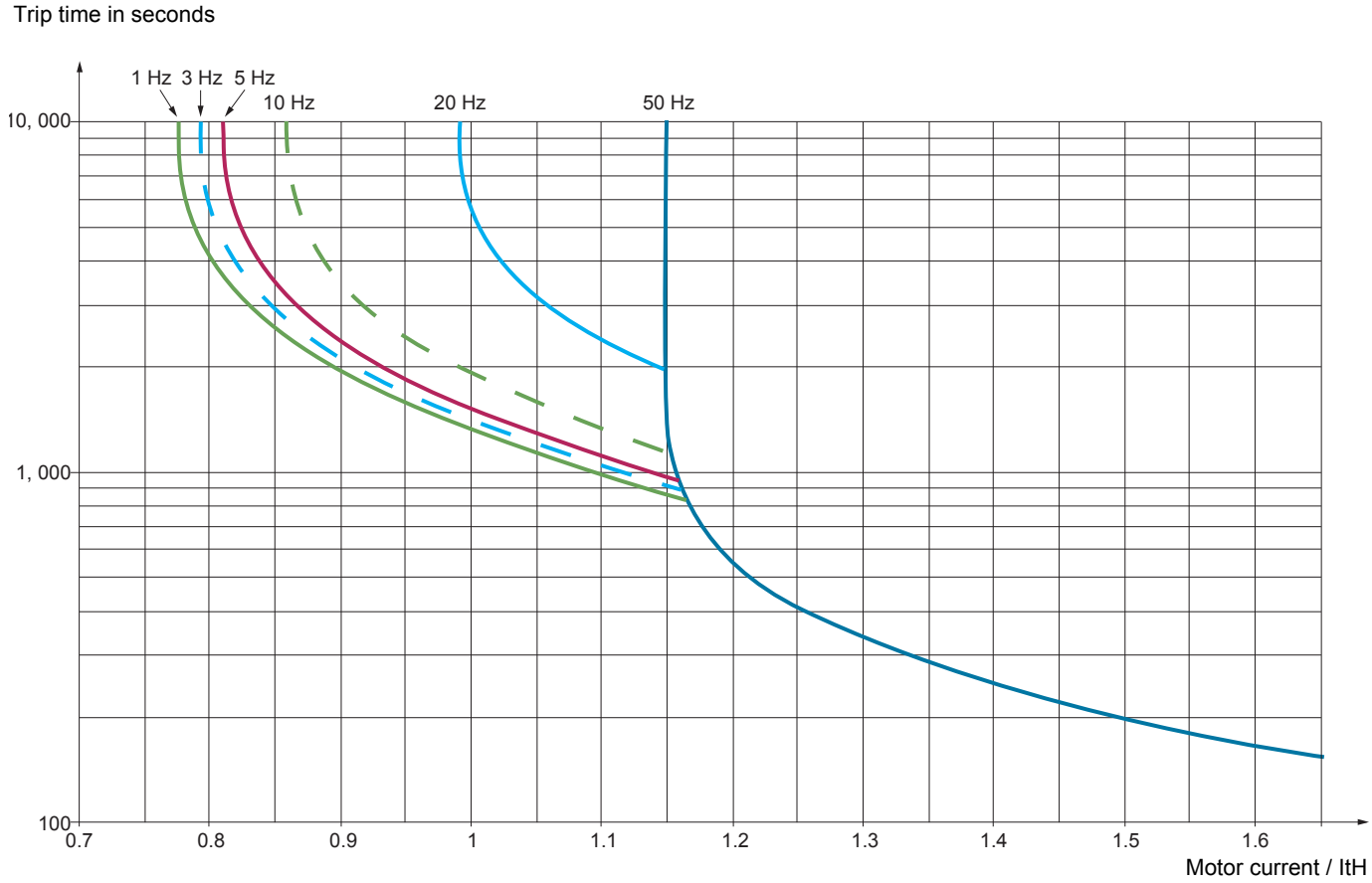

CAUTION

RISK OF DAMAGE TO THE MOTOR

External protection against overloads is required under the following circumstances:

- When the product is being switched on again, as there is no memory to record the motor thermal state
- When supplying more than one motor
- When supplying motors with ratings less than 0.2 times the nominal drive current
- When using motor switching

Failure to follow these instructions can result in equipment damage.

Parameters described in this page can be accessed by: DRI- > CONF > FULL > FLT- > OHL-

Code	Name / Description	Adjustment range	Factory setting
FLt -	**[FAULT MANAGEMENT] (continued)**		
tHt -	**[MOTOR THERMAL PROT.]**		
tHt	**[Motor protect. type]** **Note:** A trip will occur when the thermal state reaches 118% of the rated state and reactivation will occur when the state falls back below 100%. nO **[No]** (nO): No protection ACL **[Self cooled]** (ACL): For self-cooled motors FCL **[Force-cool]** (FCL): For force-cooled motors		**[Self cooled]** (ACL)
ttd (1)	**[Motor therm. level]** Trip threshold for motor thermal alarm (logic output or relay).	0 to 118%	100%
ttd2	**[Motor2 therm. level]** Trip threshold for motor 2 thermal alarm (logic output or relay).	0 to 118%	100%
ttd3	**[Motor3 therm. level]** Trip threshold for motor 3 thermal alarm (logic output or relay).	0 to 118%	100%
OLL	**[Overload fault mgt]** **CAUTION** **RISK OF DAMAGE TO THE MOTOR** If **[Overload fault mgt]** (OLL) is set to **[Ignore]** (nO), motor thermal protection is no longer provided by the drive. Provide an alternative means of thermal protection. **Failure to follow these instructions can result in equipment damage.** Type of stop in the event of a motor thermal trip. nO **[Ignore]** (nO): Detected fault ignored YES **[Freewheel]** (YES): Freewheel stop Stt **[Per STT]** (Stt): Stop according to configuration of **[Type of stop]** (Stt) page 170, without tripping. In this case, the fault relay does not open and the drive is ready to restart as soon as the detected fault disappears, according to the restart conditions of the active command channel (for example, according to **[2/3 wire control]** (tCC) and **[2 wire type]** (tCt) page 122 if control is via the terminals). Configuring an alarm for this detected fault is recommended (assigned to a logic output, for example) in order to indicate the cause of the stop. LFF **[fallback spd]** (LFF): Change to fallback speed, maintained as long as the detected fault persists and the run command has not been removed (2) rLS **[Spd maint.]** (rLS): The drive maintains the speed being applied when the detected fault occurred, as long as the detected fault is present and the run command has not been removed (2) rMP **[Ramp stop]** (rMP): Stop on ramp FSt **[Fast stop]** (FSt): Fast stop dCI **[DC injection]** (dCI): DC injection stop. This type of stop cannot be used with certain other functions. See table on page 162		**[Freewheel]** (YES)
MtM	**[Mot THR memo]** Motor thermal state memorization. nO **[No]** (nO): Motor thermal state is not stored at power off YES **[Yes]** (YES): Motor thermal state is stored at power off		**[No]** (nO)

Parameters described in this page can be accessed by: DRI- > CONF > FULL > FLT- > SAT-

Code	Name / Description	Adjustment range	Factory setting
FLt -	**[FAULT MANAGEMENT] (continued)**		
OPL -	**[OUTPUT PHASE LOSS]**		
OPL 2 s	**[Output Phase Loss]** **⚠ ⚠DANGER** **HAZARD OF ELECTRIC SHOCK, EXPLOSION, OR ARC FLASH** If **[Output phase loss]** (OPL) is set to **[No]** (nO) or **[Output cut]** (OAC), loss of cable is not detected. Check this action will not endanger personnel or equipment in any way. **Failure to follow these instructions will result in death or serious injury.** **Note:** **[Output phase loss]** (OPL) is set to **[No]** (nO) when **[Motor control type]** (Ctt) page 102 is set to **[Sync. mot.]** (SYn). For other **[Motor control type]** (Ctt) configurations, **[Output phase loss]** (OPL) is forced to **[Yes]** (YES) if brake logic control is configured. nO **[No]** (nO): Function inactive YES **[Yes]** (YES): Tripping on **[Output phase loss]** (OPL) with freewheel stop OAC **[Output cut]** (OAC): No fault triggered, but management of the output voltage in order to avoid an overcurrent when the link with the motor is re-established and catch on the fly performed (even if this function has not been configured). The drive switches to **[Output cut]** (SOC) state after **[OutPh time detect]** (Odt) time. Catch on fly is possible as soon as the drive is in Stand by output cut **[Output cut]** (SOC) state.		**[Yes]** (YES)
Odt ( )	**[OutPh time detect]** Time delay for taking the **[Output Phase Loss]** (OPL) detected fault into account.	0.5 to 10 s	0.5 s
FLt -	**[FAULT MANAGEMENT] (continued)**		
IPL -	**[INPUT PHASE LOSS]**		
IPL ★ 2 s	**[Input phase loss]** Cannot be accessed if drive rating is ATV●●●M2. In this case, no factory settings value. Factory setting : **[Freewheel]** (YES) for drive rating ATV32●●●N4. If 1 phase disappears and if this leads to performance decrease, the drive switches to fault mode **[Input phase loss]** (PHF). If 2 or 3 phases disappear, the drive trips in **[Input phase loss]** (PHF). nO **[Ignore]** (nO): Detected fault ignored YES **[Freewheel]** (YES): Detected fault with freewheel stop		According to drive rating

Parameters described in this page can be accessed by: DRI- > CONF > FULL > FLT-

Code	Name / Description	Adjustment range	Factory setting
FLt-	**[FAULT MANAGEMENT] (continued)**		
OHL-	**[DRIVE OVERHEAT]**		
OHL	**[Overtemp fault mgt]**		**[Freewheel]** (YES)

⚠ CAUTION

RISK OF EQUIPMENT DAMAGE
Inhibiting drive overheating fault detection results in the drive not being protected. This invalidates the warranty.
Check that the possible consequences do not present any risk.
Failure to follow these instructions can result in injury or equipment damage.

Behavior in the event of the drive overheating.
Note: A trip will occur when the thermal state reaches 118% of the rated state and reactivation will occur when the state falls back below 90%.

nO **[Ignore]** (nO): Detected fault ignored
YES **[Freewheel]** (YES): Freewheel stop
Stt **[Per STT]** (Stt): Stop according to configuration of **[Type of stop]** (Stt) page 170, without tripping. In this case, the fault relay does not open and the drive is ready to restart as soon as the detected fault disappears, according to the restart conditions of the active command channel (for example, according to **[2/3 wire control]** (tCC) and **[2 wire type]** (tCt) page 122 if control is via the terminals). Configuring an alarm for this detected fault is recommended (assigned to a logic output, for example) in order to indicate the cause of the stop.
LFF **[fallback spd]** (LFF): Change to fallback speed, maintained as long as the detected fault persists and the run command has not been removed (2)
rLS **[Spd maint.]** (rLS): The drive maintains the speed being applied when the detected fault occurred, as long as the detected fault is present and the run command has not been removed (2)
rMP **[Ramp stop]** (rMP): Stop on ramp
FSt **[Fast stop]** (FSt): Fast stop
dCI **[DC injection]** (dCI): DC injection stop. This type of stop cannot be used with certain other functions. See table on page 160

tHA	**[Drv therm. state al]**	0 to 118%	100%
↻	Trip threshold for drive thermal alarm (logic output or relay).		

(1) The parameter can also be accessed in the **[SETTINGS]** (SEt-) menu.
(2) Because, in this case, the detected fault does not trigger a stop, it is recommended to assign a relay or logic output to its indication.

★ These parameters only appear if the corresponding function has been selected in another menu. When the parameters can also be accessed and adjusted from within the configuration menu for the corresponding function, their description is detailed in these menus, on the pages indicated, to aid programming.

↻ Parameter that can be modified during operation or when stopped.

2 s To change the assignment of this parameter, press the ENT key for 2 s.

Parameters described in this page can be accessed by: DRI- > CONF > FULL > FLT-

Deferred stop on thermal alarm

This function helps to prevent the drive stopping between two steps of the process if the drive or motor overheats, by authorizing operation until the next stop. At the next stop, the drive is locked until the thermal state falls back to a value, which undershoots the set threshold by 20%. Example: A trip threshold set at 80% enables reactivation at 60%.

One thermal state threshold must be defined for the drive, and one thermal state threshold for the motor(s), which will trip the deferred stop.

Code	Name / Description	Adjustment range	Factory setting
FLt-	**[FAULT MANAGEMENT] (continued)**		
SAt-	**[THERMAL ALARM STOP]**		
SAt	**[Thermal alarm stop]** Thermal alarm stop function allow to set a custom alarm thermal level for the drive or the motor. When one of these levels is reached, the drive trips in freewheel stop. nO **[No]** (nO): Function inactive (in this case, the following parameters cannot be accessed) YES **[Yes]** (YES): Freewheel stop on drive or motor thermal alarm		**[No]** (nO)
tHA	**[Drv therm. state al]** Thermal state threshold of the drive tripping the deferred stop.	0 to 118%	100%
ttd	**[Motor therm. level]** Thermal state threshold of the motor tripping the deferred stop.	0 to 118%	100%
ttd2	**[Motor2 therm. level]** Thermal state threshold of the motor 2 tripping the deferred stop.	0 to 118%	100%
ttd3	**[Motor3 therm. level]** Thermal state threshold of the motor 3 tripping the deferred stop.	0 to 118%	100%
FLt-	**[FAULT MANAGEMENT] (continued)**		
EtF-	**[EXTERNAL FAULT]**		
EtF	**[External fault ass.]** If the assigned bit is at 0, there is no external fault. If the assigned bit is at 1, there is an external fault. Logic can be configured via **[External fault config]** (LEt) if a logic input has been assigned. nO **[No]** (nO): Function inactive LI1 **[LI1]** (LI1): Logical input LI1 ... **[...]** (...): See the assignment conditions on page 150		**[No]** (nO)
LEt ★	**[External fault config]** Parameter can be accessed if the external fault has been assigned to a logic input. It defines the positive or negative logic of the input assigned to the detected fault. LO **[Active low]** (LO): Trip on falling edge (change from 1 to 0) of the assigned input HIG **[Active high]** (HIG): Trip on rising edge (change from 0 to 1) of the assigned input		**[Active high]** (HIG)

Code	Name / Description	Adjustment range	Factory setting
EPL	**[External fault mgt]** Type of stop in the event of an external fault. nO **[Ignore]** (nO): External fault ignored YES **[Freewheel]** (YES): Freewheel stop Stt **[Per STT]** (Stt): Stop according to configuration of **[Type of stop]** (Stt) page 170, without tripping. In this case, the fault relay does not open and the drive is ready to restart as soon as the detected fault disappears, according to the restart conditions of the active command channel (for example, according to **[2/3 wire control]** (tCC) and **[2 wire type]** (tCt) page 122 if control is via the terminals). Configuring an alarm for this detected fault is recommended (assigned to a logic output, for example) in order to indicate the cause of the stop. LFF **[fallback spd]** (LFF): Change to fallback speed, maintained as long as the detected fault persists and the run command has not been removed (1) rLS **[Spd maintain.]** (rLS): The drive maintains the speed being applied when the detected fault occurred, as long as the detected fault is present and the run command has not been removed (1) rMP **[Ramp stop]** (rMP): Stop on ramp FSt **[Fast stop]** (FSt): Fast stop dCI **[DC injection]** (dCI): DC injection stop. This type of stop cannot be used with certain other functions. See table on page 162		**[Freewheel]** (YES)
FLt -	**[FAULT MANAGEMENT] (continued)**		
USb -	**[UNDERVOLTAGE MGT]**		
USb	**[UnderV. fault mgt]** Behavior of the drive in the event of an undervoltage. 0 **[Std fault]** (0): The drive trips and the external fault signal is triggered (the fault relay assigned to **[No drive flt]** (FLt) will be opened) 1 **[Flt wo relay]** (1): The drive trips but the external fault signal is not triggered (the fault relay assigned to **[No drive flt]** (FLt) remains closed) 2 **[Alarm]** (2): Alarm and fault relay remain closed. The alarm can be assigned to a logic output or a relay		**[Std fault]** (0)
UrES	**[Mains voltage]** Rated voltage of the line supply in V. For ATV32●●●M2: 200 **[200V ac]** (200): 200 Volts AC 220 **[220V ac]** (220): 220 Volts AC 230 **[230V ac]** (230): 230 Volts AC 240 **[240V ac]** (240): 240 Volts AC For ATV32●●●N4: 380 **[380V ac]** (380): 380 Volts AC 400 **[400V ac]** (400): 400 Volts AC 440 **[440V ac]** (440): 440 Volts AC 460 **[460V ac]** (460): 460 Volts AC 500 **[500V ac]** (500): 500 Volts AC (factory setting)	According to drive voltage rating	According to drive voltage rating
USL	**[Undervoltage level]** Undervoltage fault level setting in Volts. The factory setting is determined by the drive voltage rating.	100 to 276 V	According to drive rating
USt	**[Undervolt. time out]** Time delay for taking undervoltage detected fault into account.	0.2 s to 999.9 s	0.2 s
StP	**[UnderV. prevention]** Behavior in the event of the undervoltage prevention level being reached. nO **[No]** (nO): No action DCS **[DC Maintain]** (DCS): This stop mode uses the inertia to maintain the DC bus voltage as long as possible rMP **[Ramp stop]** (rMP): Stop following an adjustable ramp **[Max stop time]** (StM) LnF **[Lock-out]** (LnF): Lock (freewheel stop) without trip		**[No]** (nO)
tSM ★ ↻	**[UnderV. restart tm]** Time delay before authorizing the restart after a complete stop for **[UnderV. prevention]** (StP) = **[Ramp stop]** (rMP), if the voltage has returned to normal.	1.0 s to 999.9 s	1.0 s
UPL ★	**[Prevention level]** Undervoltage prevention level setting in Volts, which can be accessed if **[UnderV. prevention]** (StP) is not **[No]** (nO). The adjustment range and factory setting are determined by the drive voltage rating and the **[Mains voltage]** (UrES) value.	133 to 261 V	According to drive rating

Parameters described in this page can be accessed by: DRI- > CONF > FULL > FLT- > CLL-

Code	Name / Description	Adjustment range	Factory setting
StM ★ ↻	**[Max stop time]** Ramp time if **[UnderV. prevention]** (StP) is set to **[Ramp stop]** (rMP).	0.01 to 60.00 s	1.00 s
tbS ★ ↻	**[DC bus maintain tm]** DC bus maintain time if **[UnderV. prevention]** (StP) is set to **[DC Maintain]** (MMS).	1 to 9,999 s	9,999 s
FLt-	**[FAULT MANAGEMENT] (continued)**		
tIt-	**[IGBT TESTS]**		
Strt	**[IGBT test]**		**[No]** (nO)
nO	**[No]** (nO): No test		
YES	**[Yes]** (YES): The IGBTs are tested on power up and every time a run command is sent. These tests cause a slight delay (a few ms). In the event of a detected fault, the drive will lock. The following faults can be detected: - Drive output short-circuit (terminals U-V-W): SCF display. - IGBT inoperable: xtF, where x indicates the number of the IGBT concerned. - IGBT short-circuited: x2F, where x indicates the number of the IGBT concerned.		
FLt-	**[FAULT MANAGEMENT] (continued)**		
LFL-	**[4-20mA LOSS]**		
LFL3	**[AI3 4-20mA loss]**		**[Ignore]** (nO)
nO	**[Ignore]** (nO): Detected fault ignored. This is the only possible configuration if **[AI3 min. value]** (CrL3) page 131 is not greater than 3 mA		
YES	**[Freewheel]** (YES): Freewheel stop		
Stt	**[Per STT]** (Stt): Stop according to configuration of **[Type of stop]** (Stt) page 170, without fault tripping. In this case, the fault relay does not open and the drive is ready to restart as soon as the detected fault disappears, according to the restart conditions of the active command channel (for example, according to **[2/3 wire control]** (tCC) and **[2 wire type]** (tCt) page 122 if control is via the terminals). Configuring an alarm for this detected fault is recommended (assigned to a logic output, for example) in order to indicate the cause of the stop		
LFF	**[Fallback spd]** (LFF): Change to fallback speed, maintained as long as the detected fault persists and the run command has not been removed (1)		
rLS	**[Spd maint.]** (rLS): The drive maintains the speed being applied when the detected fault occurred, as long as the detected fault is present and the run command has not been removed (1)		
rMP	**[Ramp stop]** (rMP): Stop on ramp		
FSt	**[Fast stop]** (FSt): Fast stop		
dCI	**[DC injection]** (dCI): DC injection stop. This type of stop cannot be used with certain other functions. See table on page 160		

(1) Because, in this case, the detected fault does not trigger a stop, it is recommended to assign a relay or logic output to its indication.

★ These parameters only appear if the corresponding function has been selected in another menu. When the parameters can also be accessed and adjusted from within the configuration menu for the corresponding function, their description is detailed in these menus, on the pages indicated, to aid programming.

↻ Parameter that can be modified during operation or when stopped.

Parameters described in this page can be accessed by: DRI- > CONF > FULL > FLT- > SDD-

Parameter can be accessed in [Expert] mode

Code	Name / Description	Adjustment range	Factory setting
FLt-	**[FAULT MANAGEMENT] (continued)**		
InH-	**[FAULT INHIBITION]**		
InH	**[Fault inhibit assign.]**		**[No]** (nO)

⚠ DANGER

LOSS OF PERSONNEL AND EQUIPMENT PROTECTION
Enabling **[Fault inhibit assign.]** (InH) will disable the drive controller protection features.
- **[Fault inhibit assign.]** (InH) should not be enabled for typical applications of this equipment.
- **[Fault inhibit assign.]** (InH) should be enabled only in extraordinary situations where a thorough risk analysis demonstrates that the presence of adjustable speed drive protection poses a greater risk than personnel injury or equipment damage.

Failure to follow these instructions will result in death or serious injury.

★ ⌛ 2 s

If the assigned input or bit is at 0, detected fault monitoring is active. If the assigned input or bit is at 1, fault monitoring is inactive. Active detected faults are cleared on a rising edge (change from 0 to 1) of the assigned input or bit.

Note: The Safe Torque Off function and any detected faults that help to prevent any form of operation are not affected by this function.

Following faults can be inhibited:
AnF, CnF, COF, CrF1, dLF, EnF, EPF1, EPF2, FCF2, InFA, InFb, LFF3, ObF, OHF, OLC, OLF, OPF1, OPF2, OSF, OtFL, PHF, PtFL, SLF1, SLF2, SLF3, SOF, SPF, SSF, tJF, tnF and ULF.

nO **[No]** (nO): Function inactive
LI1 **[LI1]** (LI1): Logical input LI1
... **[...]** (...): See the assignment conditions on page 150

Code	Name / Description	Adjustment range	Factory setting
FLt-	**[FAULT MANAGEMENT] (continued)**		
CLL-	**[COM. FAULT MANAGEMENT]**		
CLL	**[Network fault mgt]**		**[Freewheel]** (YES)

⚠ WARNING

LOSS OF CONTROL
If Network fault management **[Network fault mgt]** (CLL) is set to **[Ignore]** (nO), communication control will be inhibited.
For safety reasons, inhibiting the communication interruption detection should be restricted to the debug phase or to special applications.

Failure to follow these instructions can result in death, serious injury, or equipment damage.

Behavior of the drive in the event of a communication interruption with a communication card.

nO **[Ignore]** (nO): Detected fault ignored
YES **[Freewheel]** (YES): Freewheel stop
Stt **[Per STT]** (Stt): Stop according to configuration of **[Type of stop]** (Stt) page 170, without fault tripping. In this case, the fault relay does not open and the drive is ready to restart as soon as the detected fault disappears, according to the restart conditions of the active command channel (for example, according to **[2/3 wire control]** (tCC) and **[2 wire type]** (tCt) page 122 if control is via the terminals). Configuring an alarm for this detected fault is recommended (assigned to a logic output, for example) in order to indicate the cause of the stop
LFF **[Fallback spd]** (LFF): Change to fallback speed, maintained as long as the detected fault persists and the run command has not been removed (1)
rLS **[Spd maint.]** (rLS): The drive maintains the speed being applied when the detected fault occurred, as long as the detected fault is present and the run command has not been removed (1)
rMP **[Ramp stop]** (rMP): Stop on ramp
FSt **[Fast stop]** (FSt): Fast stop
dCI **[DC injection]** (dCI): DC injection stop. This type of stop cannot be used with certain other functions. See table on page 160

Parameters described in this page can be accessed by: DRI- > CONF > FULL > FLT- > TID-

Code	Name / Description	Adjustment range	Factory setting
COL	**[CANopen fault mgt]**		**[Freewheel]** (YES)

⚠ WARNING

LOSS OF CONTROL
If CANopen® fault management **[CANopen fault mgt]** (COL) is set to **[Ignore]** (nO), communication control will be inhibited.
For safety reasons, inhibiting the communication interruption detection should be restricted to the debug phase or to special applications.
Failure to follow these instructions can result in death, serious injury, or equipment damage.

Behavior of the drive in the event of a communication interruption with integrated CANopen®.

nO **[Ignore]** (nO): Detected fault ignored
YES **[Freewheel]** (YES): Freewheel stop
Stt **[Per STT]** (Stt): Stop according to configuration of **[Type of stop]** (Stt) page 170, without fault tripping. In this case, the fault relay does not open and the drive is ready to restart as soon as the detected fault disappears, according to the restart conditions of the active command channel (for example, according to **[2/3 wire control]** (tCC) and **[2 wire type]** (tCt) page 122 if control is via the terminals). Configuring an alarm for this detected fault is recommended (assigned to a logic output, for example) in order to indicate the cause of the stop.
LFF **[fallback spd]** (LFF): Change to fallback speed, maintained as long as the detected fault persists and the run command has not been removed (1)
rLS **[Spd maint.]** (rLS): The drive maintains the speed being applied when the detected fault occurred, as long as the detected fault is present and the run command has not been removed (1)
rMP **[Ramp stop]** (rMP): Stop on ramp
FSt **[Fast stop]** (FSt): Fast stop
dCI **[DC injection]** (dCI): DC injection stop. This type of stop cannot be used with certain other functions. See table on page 162.

SLL	**[Modbus fault mgt]**		**[Freewheel]** (YES)

⚠ WARNING

LOSS OF CONTROL
If Modbus fault management **[Modbus fault mgt]** (SLL) is set to **[Ignore]** (nO), communication control will be inhibited.
For safety reasons, inhibiting the communication interruption detection should be restricted to the debug phase or to special applications.
Failure to follow these instructions can result in death, serious injury, or equipment damage.

Behavior of the drive in the event of a communication interruption with integrated Modbus.

nO **[Ignore]** (nO): Detected fault ignored
YES **[Freewheel]** (YES): Freewheel stop
Stt **[Per STT]** (Stt): Stop according to configuration of **[Type of stop]** (Stt) page 170, without fault tripping. In this case, the fault relay does not open and the drive is ready to restart as soon as the detected fault disappears, according to the restart conditions of the active command channel (for example, according to **[2/3 wire control]** (tCC) and **[2 wire type]** (tCt) page 122 if control is via the terminals). Configuring an alarm for this detected fault is recommended (assigned to a logic output, for example) in order to indicate the cause of the stop.
LFF **[fallback spd]** (LFF): Change to fallback speed, maintained as long as the detected fault persists and the run command has not been removed (1)
rLS **[Spd maint.]** (rLS): The drive maintains the speed being applied when the detected fault occurred, as long as the detected fault is present and the run command has not been removed (1)
rMP **[Ramp stop]** (rMP): Stop on ramp
FSt **[Fast stop]** (FSt): Fast stop
dCI **[DC injection]** (dCI): DC injection stop. This type of stop cannot be used with certain other functions. See table on page 162.

Parameters described in this page can be accessed by: DRI- > CONF > FULL > FLT- > FQS-

Code	Name / Description	Adjustment range	Factory setting
FLt-	**[FAULT MANAGEMENT] (continued)**		
Sdd-	**[ENCODER FAULT]**		
Sdd	**[Load slip detection]** Load slip detection activation **⚠ WARNING** **LOSS OF CONTROL** When [Load slip detection] (Sdd) = [No] (nO), the detected fault [Load slipping] (AnF) will not be managed and the drive will not trip. • Check this action will not endanger personnel or equipment in any way. **Failure to follow these instructions can result in death, serious injury, or equipment damage.** nO **[No]** (nO): Detected fault ignored YES **[Yes]** (YES): Freewheel stop The event is triggered by comparison with the output frequency and the speed feedback according to the related parameters configuration FAnF, LAnF, dANF and tAnF. The event is also triggered as soon as a RUN order is received, if the sign of the output frequency and the speed feedback are in opposite way during tAnF. In case of a detected fault, the drive switch to a freewheel stop, and if the brake logic control function has been configured, the brake command will be set to 0.		**[Yes]** (YES)
FAnF ★	**[ANF Frequency Thd.]** Visible if [Encoder usage] (EnU) is set to [Fdbk monit.] (SEC). See page 133		-
LAnF ★	**[ANF Detection level]** Visible if [Encoder usage] (EnU) is set to [Fdbk monit.] (SEC). See page 133		-
dAnF ★	**[ANF Direction check]** Visible if [Encoder usage] (EnU) is set to [Fdbk monit.] (SEC). See page 134		-
tAnF ★	**[ANF Time Thd.]** Visible if [Encoder usage] (EnU) is set to [Fdbk monit.] (SEC). See page 134		-

Parameters described in this page can be accessed by: DRI- > CONF > FULL > FLT- > FQS-

Code	Name / Description	Adjustment range	Factory setting
t Id -	**[TORQUE OR I LIM. DETECT]**		
SSb	**[Trq/I limit. stop]** Behavior in the event of switching to torque or current limitation. nO **[Ignore]** (nO): Detected fault ignored YES **[Freewheel]** (YES): Freewheel stop Stt **[Per STT]** (Stt): Stop according to configuration of **[Type of stop]** (Stt) page 170, without fault tripping. In this case, the fault relay does not open and the drive is ready to restart as soon as the detected fault disappears, according to the restart conditions of the active command channel (for example, according to **[2/3 wire control]** (tCC) and **[2 wire type]** (tCt) page 122 if control is via the terminals). Configuring an alarm for this detected fault is recommended (assigned to a logic output, for example) in order to indicate the cause of the stop LFF **[fallback spd]** (LFF): Change to fallback speed, maintained as long as the detected fault persists and the run command has not been removed (1) rLS **[Spd maint.]** (rLS): The drive maintains the speed being applied when the detected fault occurred, as long as the detected fault is present and the run command has not been removed (1) rMP **[Ramp stop]** (rMP): Stop on ramp FSt **[Fast stop]** (FSt): Fast stop dCI **[DC injection]** (dCI): DC injection stop. This type of stop cannot be used with certain other functions. See table on page 162		**[Ignore]** (nO)
StO ( )	**[Trq/I limit. time out]** (If trip has been configured) Time delay for taking SSF limitation into account.	0 to 9,999 ms	1,000 ms

(1) Because, in this case, the detected fault does not trigger a stop, it is recommended to assign a relay or logic output to its indication.

( ) Parameter that can be modified during operation or when stopped.

2 s To change the assignment of this parameter, press the ENT key for 2 s.

Parameters described in this page can be accessed by: DRI- > CONF > FULL > FLT- > DLD-

Use of the "Pulse input" input to measure the speed of rotation of the motor

This function uses the "Pulse input" input and can only be used if the "Pulse input" input is not being used for another function.

Example of use

An indexed disk driven by the motor and connected to a proximity sensor can be used to generate a frequency signal that is proportional to the speed of rotation of the motor.

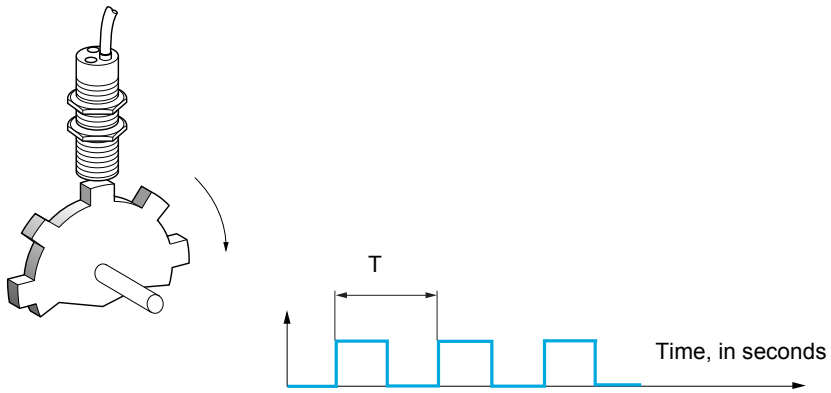

When applied to the "Pulse input" input, this signal supports:

- Measurement and display of the motor speed: signal frequency = 1/T. This frequency is displayed by means of the **[Pulse in. work. freq.]** (F 9 5) parameter, page 48.
- Overspeed detection (if the measured speed exceeds a preset threshold, the drive will trip).
- Brake failure detection, if brake logic control has been configured: If the speed does not drop sufficiently quickly following a command to engage the brake, the drive will trip. This function can be used to detect worn brake linings.
- Detection of a speed threshold that can be adjusted using **[Pulse warning thd.]** (F 9 L) page 99 and is assignable to a relay or logic output, see page 135.

Parameters described in this page can be accessed by: DRI- > CONF > FULL > FLT- > TNF-

Code	Name / Description	Adjustment range	Factory setting
FLt -	**[FAULT MANAGEMENT] (continued)**		
F9F -	**[FREQUENCY METER]**		
F9F	**[Frequency meter]** Activation of the speed measurement function. nO **[No]** (nO): Function inactive. In this case, none of the function parameters can be accessed YES **[Yes]** (YES): Function active, assignment only possible if no other functions have been assigned to the "Pulse input" input		**[No]** (nO)
F9C	**[Pulse scal. divisor]** Scaling factor for the "Pulse input" input (divisor). The frequency measured is displayed by means of the **[Pulse in. work. freq.]** (F95) parameter, page 48.	1.0 to 100.0	1.0
F9A	**[Overspd. pulse thd.]** Activation and adjustment of overspeed monitoring: **[Overspeed]** (SOF). nO **[No]** (nO): No overspeed monitoring - **1 Hz to 20.00 kHz**: Adjustment of the frequency tripping threshold on the "Pulse input" input divided by **[Pulse scal. divisor]** (F9C).		**[No]** (nO)
tdS	**[Pulse overspd delay]** Time delay for taking overspeed detected fault into account.	0.0 s to 10.0 s	0.0 s
Fdt	**[Level fr. pulse ctrl]** Activation and adjustment of monitoring for the Pulse input (speed feedback): **[Speed fdback loss]** (SPF). nO **[No]** (nO): No monitoring of speed feedback - **0.1 Hz to 599 Hz**: Adjustment of the motor frequency threshold for tripping a speed feedback detected fault (difference between the estimated frequency and the measured speed).		**[No]** (nO)
F9t	**[Pulse thd. wo Run]** Activation and adjustment of brake failure monitoring: **[Brake feedback]** (brF). If brake logic control **[Brake assignment]** (bLC) page 191 is not configured, this parameter is forced to **[No]** (nO). nO **[No]** (nO): No brake monitoring - **1 Hz to 1,000 Hz**: Adjustment of the motor frequency threshold for tripping a brake failure trip (detection of speeds other than 0).		**[No]** (nO)
t9b	**[Pulse wo Run delay]** Time delay for taking brake failure trip into account.	0.0 s to 10.0 s	0.0 s

Parameters described in this page can be accessed by: DRI- > CONF > FULL > FLT- > PPI-

Load variation detection

This detection is only possible with the High-speed hoisting function. It can be used to detect if an obstacle has been reached, triggering a sudden (upward) increase or (downward) decrease in the load.

Load variation detection triggers a **[Dynamic load fault]** (dLF). The **[Dyn. load Mgt.]** (dLb) parameter can be used to configure the response of the drive in the event of this detected fault.

Load variation detection can also be assigned to a relay or a logic output.

There are two possible detection modes, depending on the configuration of high-speed hoisting:

- Speed reference mode
  [High speed hoisting] (HSO) page 202 is set to **[Speed ref]** (SSO).
  Torque variation detection.
  During high-speed operation, the load is compared to that measured during the speed step. The permissible load variation and its duration can be configured. If exceeded, the drive switches to fault mode.
- Current limitation mode
  [High speed hoisting] (HSO) page 202 is set to **[Current Limit]** (CSO).
  On ascend, during high-speed operation, an increase in load will result in a drop in speed. Even if high-speed operation has been activated, if the motor frequency drops below the **[I Limit Frequency]** (SCL) threshold page 202, the drive will switch to fault mode. The detection is realised only for a positive variation of the load and only in the high speed area (area upper to **[I Limit Frequency]** (SCL)).
  On descend, operation takes the form of Speed reference mode.

Code	Name / Description	Adjustment range	Factory setting
FLt-	**[FAULT MANAGEMENT] (continued)**		
dLd-	**[DYNAMIC LOAD DETECT.]** Load variation detection. This can be accessed if **[High speed hoisting]** (HSO) page 202 is not **[No]** (nO).		
tLd	**[Dynamic load time]**		**[No]** (nO)
	Activation of load variation detection and adjustment of time delay for taking load variation detected fault **[Dynamic load fault]** (dLF) into account. nO **[No]** (nO): No load variation detection - **0.00 s to 10.00 s**: Adjustment of the time delay for taking detected fault into account.		
dLd	**[Dynamic load threshold]**	1 to 100%	100%
	Adjustment of the trip threshold for load variation detection, as a % of the load measured during the speed step.		
dLb	**[Dyn. load Mgt.]**		**[Freewheel]** (YES)
	Behavior of the drive in the event of a load variation detected fault. nO **[Ignore]** (nO): Detected fault ignored YES **[Freewheel]** (YES): Freewheel stop Stt **[Per STT]** (Stt): Stop according to configuration of **[Type of stop]** (Stt) page 170, without tripping. In this case, the fault relay does not open and the drive is ready to restart as soon as the detected fault disappears, according to the restart conditions of the active command channel, (for example, according to **[2/3 wire control]** (tCC) and **[2 wire type]** (tCt) page 122 if control is via the terminals). Configuring an alarm for this detected fault is recommended (assigned to a logic output, for example) in order to indicate the cause of the stop LFF **[Fallback spd.]** (LFF): Change to fallback speed, maintained as long as the detected fault persists and the run command has not been removed (1) rLS **[Spd maint.]** (rLS): The drive maintains the speed at the time the detected fault occurred, as long as the detected fault persists and the run command has not been removed (1) rMP **[Ramp stop]** (rMP): Stop on ramp FSt **[Fast stop]** (FSt): Fast stop		

Parameters described in this page can be accessed by: DRI- > CONF > FULL > FLT- > ULD-

Code	Name / Description	Adjustment range	Factory setting
FLt-	**[FAULT MANAGEMENT] (continued)**		
tnF-	**[AUTO TUNING FAULT]**		
tnL	**[Autotune fault mgt]**		**[Freewheel]** (YES)
nO	**[Ignore]** (nO): Detected fault ignored		
YES	**[Freewheel]** (YES): Freewheel stop		

(1) Because, in this case, the detected fault does not trigger a stop, it is recommended to assign a relay or logic output to its indication.

★ These parameters only appear if the corresponding function has been selected in another menu. When the parameters can also be accessed and adjusted from within the configuration menu for the corresponding function, their description is detailed in these menus, on the pages indicated, to aid programming.

Parameter that can be modified during operation or when stopped.

Parameters described in this page can be accessed by: DRI- > CONF > FULL > FLT- > ULD-

Card pairing

Function can only be accessed in **[Expert]** (EPr) mode.

This function is used to detect whenever a card has been replaced or the software has been modified in any way.

When a pairing password is entered, the parameters of the card currently inserted are stored. On every subsequent power-up, these parameters are verified and, in the event of a discrepancy, the drive locks in HCF fault mode. Before the drive can be restarted, you must revert to the original situation or re-enter the pairing password.

The following parameters are verified:

- The type of card for: all cards.
- The software version for: the control block, the communication cards.
- The serial number for: the control block.

Code	Name / Description	Adjustment range	Factory setting
FLt-	**[FAULT MANAGEMENT] (continued)**		
PPI-	**[CARDS PAIRING]**		
PPI ★	**[Pairing password]**	**[OFF]** (OFF) to 9,999	**[OFF]** (OFF)
OFF -	The **[OFF]** (OFF) value signifies that the card pairing function is inactive The **[ON]** (On) value signifies that card pairing is active and that an access code must be entered in order to start the drive in the event of a card pairing detected fault As soon as the code has been entered, the drive is unlocked and the code changes to **[ON]** (On). The PPI code is an unlock code known only to Schneider Electric Product Support.		

★ These parameters only appear if the corresponding function has been selected in another menu. When the parameters can also be accessed and adjusted from within the configuration menu for the corresponding function, their description is detailed in these menus, on the pages indicated, to aid programming.

Parameters described in this page can be accessed by: DRI- > CONF > FULL > FLT - > OLD-

Process underload detected fault

A process underload is detected when the next event occurs and remains pending for a minimum time **[Unld T. Del. Detect]** (ULt), which is configurable:

- The motor is in steady state and the torque is below the set underload limit (**[Unld. Thr. 0. Speed.]** (LUL), **[Unld. Thr. Nom. Speed.]** (LUn), **[Unld. Freq. Thr. Det.]** (rMUd) parameters).
- The motor is in steady state when the offset between the frequency reference and motor frequency falls below the configurable threshold **[Hysteresis Freq. Att.]** (Srb).

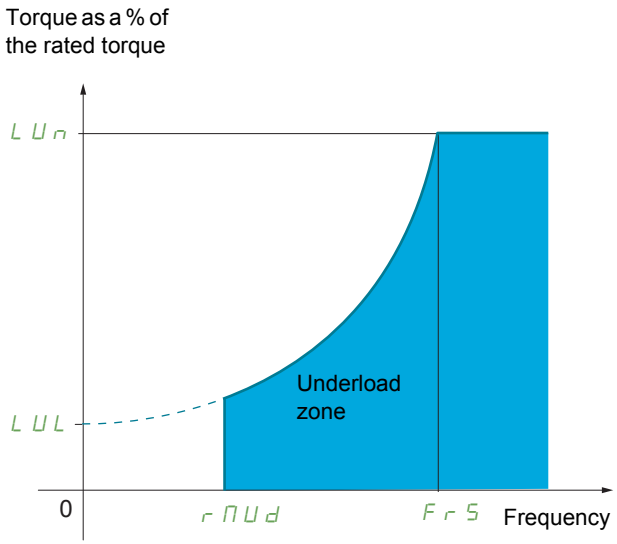

Between zero frequency and the rated frequency, the curve reflects the following equation:

$$\text{torque} = LUL + \frac{(LUn - LUL) \times (\text{frequency})^2}{(\text{rated frequency})^2}$$

The underload function is not active for frequencies below **[Unld. Freq. Thr. Det.]** (rMUd).

A relay or a logic output can be assigned to the signaling of this detected fault in the **[INPUTS / OUTPUTS CFG]** (I_O-) menu.

Code	Name / Description	Adjustment range	Factory setting
FLt-	**[FAULT MANAGEMENT] (continued)**		
ULd-	**[PROCESS UNDERLOAD]**		
ULt	**[Unld T. Del. Detect.]** Underload detection time delay. A value of 0 deactivates the function and makes the other parameters inaccessible.	0 to 100 s	0 s
LUn ★ ( )	**[Unld. Thr. Nom. Speed.]** Underload threshold at rated motor frequency (**[Rated motor freq.]** (FrS) page 84), as a % of the rated motor torque.	20 to 100%	60%
LUL ★ ( )	**[Unld. Thr. 0. Speed.]** Underload threshold at zero frequency, as a % of the rated motor torque.	0 to **[Unld.Thr.Nom.Speed]** (LUn)	0%
rMUd ★ ( )	**[Unld. Freq. Thr. Det.]** Minimum frequency underload detection threshold.	0 to 599 Hz	0 Hz
Srb ★ ( )	**[Hysteresis Freq. Att.]** Maximum deviation between the frequency reference and the motor frequency, which defines steady state operation.	0.3 to 599 Hz	0.3 Hz

Parameters described in this page can be accessed by: DRI- > CONF > FULL > FLT -

Code	Name / Description	Adjustment range	Factory setting
UdL ★	**[Underload Managmt.]** Behavior on switching to underload detection. nO **[Ignore]** (nO): Detected fault ignored YES **[Freewheel]** (YES): Freewheel stop rMP **[Ramp stop]** (rMP): Stop on ramp FSt **[Fast stop]** (FSt): Fast stop		**[Freewheel]** (YES)
FtU ★ (↻)	**[Underload T.B. Rest.]** This parameter cannot be accessed if **[Underload Mangmt.]** (UdL) is set to **[Ignore]** (nO). Minimum time permitted between an underload being detected and any automatic restart. In order to allow an automatic restart, the value of **[Max. restart time]** (tAr) page 249 must exceed this parameter by at least one minute.	0 to 6 min	0 min

★ These parameters only appear if the corresponding function has been selected in another menu. When the parameters can also be accessed and adjusted from within the configuration menu for the corresponding function, their description is detailed in these menus, on the pages indicated, to aid programming.

(↻) Parameter that can be modified during operation or when stopped.

Parameters described in this page can be accessed by: DRI- > CONF > FULL > FLT - > DCI-

Process overload detected fault

A process overload is detected when the next event occurs and remains pending for a minimum time **[Ovld Time Detect.]** (tOL), which is configurable:

- The drive is in current limitation mode.
- The motor is in steady state and the current is above the set overload threshold **[Ovld Detection Thr.]** (LOC).

The motor is in steady state when the offset between the frequency reference and motor frequency falls below the configurable threshold **[Hysteresis Freq. Att.]** (Srb).

A relay or a logic output can be assigned to the signaling of this detected fault in the **[INPUTS / OUTPUTS CFG]** (I_O-) menu.

Code	Name / Description	Adjustment range	Factory setting
FLt-	**[FAULT MANAGEMENT] (continued)**		
OLd-	**[PROCESS OVERLOAD]**		
tOL	**[Ovld Time Detect.]** Overload detection time delay. A value of 0 deactivates the function and makes the other parameters inaccessible.	0 to 100 s	0 s
LOC ★ (1)	**[Ovld Detection Thr.]** Overload detection threshold, as a % of the rated motor current **[Rated mot. current]** (nCr) page 84. This value must be less than the limit current in order for the function to work.	70 to 150%	110%
Srb ★ (1)	**[Hysteresis Freq.Att.]** Maximum deviation between the frequency reference and the motor frequency, which defines steady state operation.	0 to 599 Hz	0.3 Hz
OdL ★	**[Ovld.Proces.Mngmt]** Behavior on switching to overload detection. nO **[Ignore]** (nO): Detected fault ignored YES **[Freewheel]** (YES): Freewheel stop rMP **[Ramp stop]** (rMP): Stop on ramp FSt **[Fast stop]** (FSt): Fast stop		**[Freewheel]** (YES)
FtO ★ (1)	**[Overload T.B.Rest.]** This parameter cannot be accessed if **[Ovld.Proces.Mngmt]** (OdL) is set to **[Ignore]** (nO). Minimum time permitted between an overload being detected and any automatic restart. In order to allow an automatic restart, the value of **[Max. restart time]** (tAr) page 249 must exceed this parameter by at least one minute.	0 to 6 min	0 min
FLt-	**[FAULT MANAGEMENT] (continued)**		
LFF-	**[FALLBACK SPEED]**		
LFF	**[Fallback speed]** Selection of the fallback speed.	0 to 599 Hz	0 Hz

Code	Name / Description	Adjustment range	Factory setting
FLt -	**[FAULT MANAGEMENT] (continued)**		
FSt -	**[RAMP DIVIDER]**		
dCF ★ (1)	**[Ramp divider]** The ramp that is enabled (**[Deceleration]** (dEC) or **[Deceleration 2]** (dE2)) is then divided by this coefficient when stop requests are sent. Value 0 corresponds to a minimum ramp time.	0 to 10	4
FLt -	**[FAULT MANAGEMENT] (continued)**		
dC I -	**[DC INJECTION]**		
IdC ★ (1) (3)	**[DC inject. level 1]** **CAUTION** **RISK OF DAMAGE TO THE MOTOR** Check that the motor will withstand this current without overheating. **Failure to follow these instructions can result in equipment damage.** Level of DC injection braking current activated via logic input or selected as stop mode.	0.1 to 1.41 In (2)	0.64 In (2)
tdI ★ (1) (3)	**[DC injection time 1]** **CAUTION** **RISK OF DAMAGE TO THE MOTOR** • Long periods of DC injection braking can cause overheating and damage the motor. • Protect the motor by avoiding long periods of DC injection braking. **Failure to follow these instructions can result in equipment damage.** Maximum current injection time **[DC inject. level 1]** (IdC). After this time, the injection current becomes **[DC inject. level 2]** (IdC2).	0.1 to 30 s	0.5 s
IdC2 ★ (1) (3)	**[DC inject. level 2]** **CAUTION** **RISK OF DAMAGE TO THE MOTOR** Check that the motor will withstand this current without overheating. **Failure to follow these instructions can result in equipment damage.** Injection current activated by logic input or selected as stop mode, once period of time **[DC injection time 1]** (tdI) has elapsed.	0.1 In (2) to **[DC inject. level 1]** (IdC)	0.5 In (2)

Code	Name / Description	Adjustment range	Factory setting
tdC ★ (1) (3)	**[DC injection time 2]** **CAUTION** **RISK OF DAMAGE TO THE MOTOR** • Long periods of DC injection braking can cause overheating and damage the motor. • Protect the motor by avoiding long periods of DC injection braking. **Failure to follow these instructions can result in equipment damage.** Maximum injection time **[DC inject. level 2]** (IdC2) for injection, selected as stop mode only. This parameter can be accessed if **[Type of stop]** (Stt) is set to **[DC injection]** (dC1).	0.1 to 30 s	0.5 s

(1) The parameter can also be accessed in the **[SETTINGS]** (SEt-) and **[APPLICATION FUNCT.]** (FUn-) menus.
(2) In corresponds to the rated drive current indicated in the Installation manual and on the drive nameplate.
(3) These settings are independent of the **[AUTO DC INJECTION]** (AdC-) function.

★ These parameters only appear if the corresponding function has been selected in another menu. When the parameters can also be accessed and adjusted from within the configuration menu for the corresponding function, their description is detailed in these menus, on the pages indicated, to aid programming.

Parameter that can be modified during operation or when stopped.

Communication

With integrated display terminal:

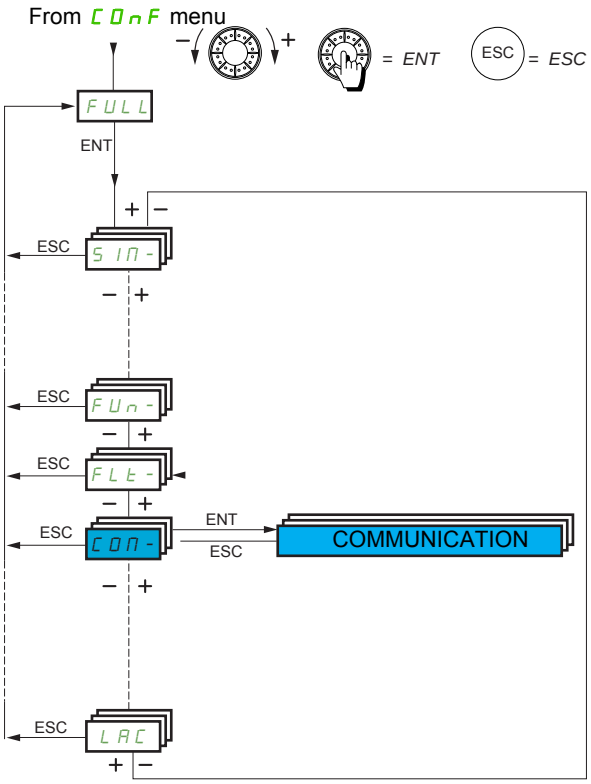

Code	Name / Description	Adjustment range	Factory setting
FULL	**[FULL] (continued)**		
CON-	**[COMMUNICATION]**		
ICS-	**[COM. SCANNER INPUT]** **[Scan. IN1 address]** (nMA1) to **[Scan. IN4 address]** (nMA4) could be used for Fast Task of the communication scanner (see Modbus & CANopen® communication manual).		
nMA1	**[Scan. IN1 address]** Address of the 1st input word.		3,201
nMA2	**[Scan. IN2 address]** Address of the 2nd input word.		8,604
nMA3	**[Scan. IN3 address]** Address of the 3rd input word.		0
nMA4	**[Scan. IN4 address]** Address of the 4th input word.		0
nMA5	**[Scan. IN5 address]** Address of the 5th input word.		0
nMA6	**[Scan. IN6 address]** Address of the 6th input word.		0
nMA7	**[Scan. IN7 address]** Address of the 7th input word.		0
nMA8	**[Scan. IN8 address]** Address of the 8th input word.		0

Code	Name / Description	Adjustment range	Factory setting
COM-	**[COMMUNICATION] (continued)**		
OCS-	**[COM. SCANNER OUTPUT]** **[Scan. Out1 address]** (nCA1) to **[Scan. Out4 address]** (nCA4) could be used for Fast Task of the communication scanner (see Modbus & CANopen® communication manual).		
nCA1	**[Scan.Out1 address]** Address of the 1st output word.		8,501
nCA2	**[Scan.Out2 address]** Address of the 2nd output word.		8,602
nCA3	**[Scan.Out3 address]** Address of the 3rd output word.		0
nCA4	**[Scan.Out4 address]** Address of the 4th output word.		0
nCA5	**[Scan.Out5 address]** Address of the 5th output word.		0
nCA6	**[Scan.Out6 address]** Address of the 6th output word.		0
nCA7	**[Scan.Out7 address]** Address of the 7th output word.		0
nCA8	**[Scan.Out8 address]** Address of the 8th output word.		0
COM-	**[COMMUNICATION] (continued)**		
Md1-	**[MODBUS NETWORK]**		
Add	**[Modbus Address]**	**[OFF]** (OFF) to 247	**[OFF]** (OFF)
OFF -	**[OFF]** (OFF) 1 to 247		
AMOC ★	**[Modbus add Com. C.]**	**[OFF]** (OFF) to 247	**[OFF]** (OFF)
OFF -	**[OFF]** (OFF) 1 to 247		
tbr	**[Modbus baud rate]** 4 8 - 9 6 - 19 2 - 38 4 kbps on the integrated display terminal. 4800, 9600, 19200 or 38400 bauds on the graphic display terminal.		**[19.2 Kbps]** (192)
tFO	**[Modbus format]** 8O1 - 8E1 - 8n1, 8n2		**[8-E-1]** (8E1)
ttO	**[Modbus time out]** 0.1 to 30 s	0.1 to 30 s	10.0 s
COM1	**[Mdb com stat]**		
r0t0 r0t1 r1t0 r1t1	**[r0t0]** (r0t0): Modbus no reception, no transmission = communication idle **[r0t1]** (r0t1): Modbus no reception, transmission **[r1t0]** (r1t0): Modbus reception, no transmission **[r1t1]** (r1t1): Modbus reception and transmission		

★ These parameters only appear if the corresponding function has been selected in another menu. When the parameters can also be accessed and adjusted from within the configuration menu for the corresponding function, their description is detailed in these menus, on the pages indicated, to aid programming.

BLUETOOTH

Code	Name / Description	Adjustment range	Factory setting
COM-	**[COMMUNICATION] (continued)**		
btH-	**[BLUETOOTH]**		
PAn	**[Device Name]** Device name set with graphic display terminal. **Note:** The length is up to 16 alphanumeric digits on the product. According to bluetooth driver, device name must not exceed 14 digits. Digits n°14 & 15 will not be displayed through bluetooth network.		
MAC	**[Mac @]** Read only information accessible with graphic display terminal (XX-XX-XX-XX-XX-XX). This information is also available on the label in front of the product.		
btUA	**[Bluetooth Activation]** Activation of the integrated Bluetooth. OFF **[OFF]** (OFF): Integrated Bluetooth deactivated On **[ON]** (On): Integrated Bluetooth activated The integrated Bluetooth function will be enabled at the next power on		**[OFF]** (OFF)
btUC ★	**[Bluetooth Visibility]** Bluetooth Visibility Condition. nO **[No]** (nO): Not assigned FLt **[No drive flt]** (FLt): Drive in fault state YES **[Yes]** (YES): Yes LI1 **[LI1]** (LI1): Logical input LI1 ... **[...]** (...): See the assignment conditions on page 150		**[No]** (nO)
btPI	**[PIN code]** Bluetooth PIN code from 0 to 9,999. **Example:** In order to set a pin code like "0001", just set "1".	0 to 9,999	0
COM-	**[COMMUNICATION] (continued)**		
CnO-	**[CANopen]**		
AdCO	**[CANopen address]** OFF **[OFF]** (OFF): OFF - 1 to 127	**[OFF]** (OFF) to 127	**[OFF]** (OFF)
bdCO	**[CANopen bit rate]** 50 **[50 kbps]** (50): 50,000 Bauds 125 **[125 kbps]** (125): 125,000 Bauds 250 **[250 kbps]** (250): 250,000 Bauds 500 **[500 kbps]** (500): 500,000 Bauds 1M **[1 Mbps]** (1M): 1 MBauds		**[250 kbps]** (250)
ErCO	**[Error code]** Read-only parameter, cannot be modified.	0 to 5	-

Code	Name / Description	Adjustment range	Factory setting
COM-	**[COMMUNICATION] (continued)**		
Cbd-	**[COMMUNICATION CARD]** See the specific documentation for the card used.		
LCF-	**[FORCED LOCAL]**		
FLO	**[Forced local assign.]**		**[No]** (nO)
	⚠ WARNING **LOSS OF CONTROL** If the equipment switches to forced local mode, virtual input used in the current configuration will remain fixed at the last value transmitted. Do not use the virtual input and forced local mode in the same configuration. **Failure to follow these instructions can result in death, serious injury, or equipment damage.**		
	Forced local assignment. Forced local mode is active when the input is at state 1. **[Forced local assign.]** (FLO) is forced to **[No]** (nO) if **[Profile]** (CHCF) is set to **[I/O profile]** (IO) page 151.		
nO	**[No]** (nO): Function inactive		
LI1	**[LI1]** (LI1): Logical input LI1		
...	**...**		
LI6	**[LI6]** (LI6): Logical input LI6		
LAI1	**[LAI1]** (LAI1): Logical input AI1		
LAI2	**[LAI2]** (LAI2): Logical input AI2		
OL01	**[OL01]** (OL01): Function blocks: Logical Output 01		
...	**...**		
OL10	**[OL10]** (OL10): Function blocks: Logical Output 10		
FLOC	**[Forced local Ref.]**		**[No]** (nO)
	Forced local reference source assignment.		
nO	**[No]** (nO): Not assigned (control via the terminals with zero reference)		
AI1	**[AI1]** (AI1): Analog input		
AI2	**[AI2]** (AI2): Analog input		
AI3	**[AI3]** (AI3): Analog input		
LCC	**[HMI]** (LCC): Assignment of the reference and command to the graphic display terminal or remote display terminal. Reference: **[HMI Frequency ref.]** (LFr) page 48. Command: RUN/STOP/FWD/REV keys.		
PI	**[RP]** (PI): Pulse input		
OA01	**[OA01]** (OA01): Function blocks: Analog Output 01		
...	**...**		
OA10	**[OA10]** (OA10): Function blocks: Analog Output 10		
FLOt ★	**[Time-out forc. local]** 0.1 to 30 s. This parameter can be accessed if **[Forced local assign.]** (FLO) is not set to **[No]** (nO). Time delay before communication monitoring is resumed on leaving forced local mode.	0.1 to 30 s	10.0 s

★ These parameters only appear if the corresponding function has been selected in another menu. When the parameters can also be accessed and adjusted from within the configuration menu for the corresponding function, their description is detailed in these menus, on the pages indicated, to aid programming.

Access Level

See **[Access Level]** (LAC) page 278.

Interface (ItF)

7

What's in this Chapter?

This chapter contains the following topics:

Topic	Page
Access Level (LAC)	278
Language (LnG)	280
Monitoring Configuration (MCF)	281
Display configuration (dCF)	285

Parameters described in this page can be accessed by: ITF-

Access Level (LAC)

With integrated display terminal:

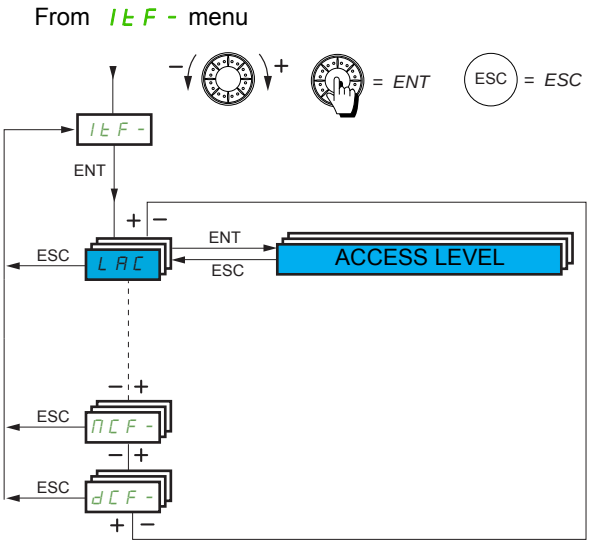

Code	Name / Description	Factory setting
ItF-	**[3 INTERFACE]**	
LAC	**[3.1 ACCESS LEVEL]**	**[Standard]** (Std)
bAS	**[Basic]** (bAS): Limited access to **[SIMPLY START]** (SIM-), **[1.2 MONITORING]** (MOn-), **[SETTINGS]** (SEt-), **[FACTORY SETTINGS]** (FCS-), **[5 PASSWORD]** (COd) and **[3.1 ACCESS LEVEL]** (LAC-) menus. Only one function can be assigned to each input.	
Std	**[Standard]** (Std): Access to all menus on the integrated display terminal. Only one function can be assigned to each input.	
AdU	**[Advanced]** (AdU): Access to all menus on the integrated display terminal. Several functions can be assigned to each input.	
EPr	**[Expert]** (EPr): Access to all menus on the integrated display terminal and access to additional parameters. Several functions can be assigned to each input.	

Parameter that can be modified during operation or when stopped.

Comparison of the menus that can be accessed on the graphic display terminal/integrated display terminal

				Access level
[1 DRIVE MENU] (dr I -)				Basic bAS
	[1.1 SPEED REFERENCE] (rEF-)			
	[1.2 MONITORING] (MOn -)			
		MMO - (Monitoring motor)		
		IOM - (I/O MAP)		
		SAF - (Monitoring Safety)		
		MFb - (Monitoring Function Blocks)		
		CMM - (Communication Map)		
		MPI - (Monitoring PI)		
		PEt - (Monitoring Power time)		
		ALr - (Alarms) (1)		
		SSt - (Other state) (1)		
		COd - (Password)		
	[1.3 CONFIGURATION] (CONF)			
		MYMn - (My Menu)		
		FCS - (Factory Settings)		
		FULL (Full)		
			SIM - (Simply Start)	
			SEt - (Settings)	
			FbM - (Function Blocks)	
[2 IDENTIFICATION] (OId -) (1)				
[3 INTERFACE] (ItF -) (1)				
	[3.1 ACCESS LEVEL] (LAC)			
	[3.2 LANGUAGE] (LnG)			
[4 OPEN / SAVE AS] (trA -) (1)				
[5 PASSWORD] (COd -) (1)				
	A single function can be assigned to each input.			
[1 DRIVE MENU] (dr I -)	**[1.2 MONITORING]** (MOn -)	dGt - (Diagnostics)		Standard Std
	[1.3 CONFIGURATION] (CONF)	FULL (Full)		
			drC - (Motor Control)	
			I_O - (Inputs / Outputs Configuration)	
			CtL - (Command)	
			FUn - (Application function)	
			FLt - (Fault Management)	
			COM - (Communication)	
[3 INTERFACE] (ItF -) (1)	**[3.3 MONITORING CONFIG.]** (MCF -)			
	A single function can be assigned to each input.			
	[3.4 DISPLAY CONFIG.] (dCF-) (1)			Advanced AdU
	Several functions can be assigned to each input.			
Expert parameters				Expert EPr
	Several functions can be assigned to each input.			

(1) Can be accessed only with graphic display terminal.

Parameters described in this page can be accessed by: ITF-

Language (LnG)

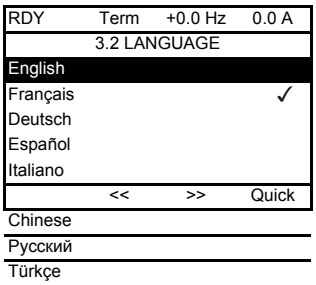

When only one selection is possible, the selection made is indicated by ✓

Example: Only one language can be chosen.

Code	Name / Description	Factory setting
LnG	**[3.2 LANGUAGE]**	**[Language 0]** (LnG0)
	Current language index.	
LnG0	**[Language 0]** (LnG0)	
...	**...**	
LnG9	**[Language 9]** (LnG9)	

Parameter that can be modified during operation or when stopped.

Monitoring Configuration (MCF)

This menu can only be accessed with the graphic display terminal.

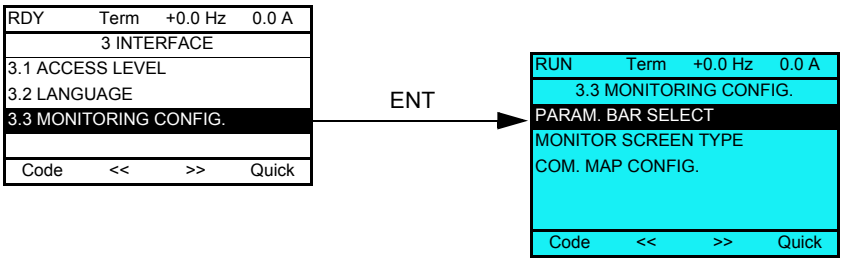

This can be used to configure the information displayed on the graphic display screen during operation.

[PARAM. BAR SELECT]: Selection of 1 to 2 parameters displayed on the top line (the first 2 cannot be modified).

[MONITOR SCREEN TYPE]: Selection of parameters displayed in the centre of the screen and the display mode (digital values or bar graph format).

[COM. MAP CONFIG.]: Selection of the words displayed and their format.

Parameters described in this page can be accessed by: ITF- > MCF-

Code	Name / Description
MCF-	**[3.3 MONITORING CONFIG]**

Code	Name / Description	
PbS-	**[PARAM. BAR SELECT]**	
	[AI1]	in V
	[AI2]	in V
	[AI3]	in mA
	[AO1]	in V
	[ETA state world]	
	[Alarm groups]	
	[Frequency ref.]	in Hz: parameter displayed in factory configuration
	[Output frequency]	in Hz
	[Motor current]	in A: parameter displayed in factory configuration
	[Motor speed]	in rpm
	[Motor voltage]	in V
	[Motor power]	in W
	[Motor torque]	as a %
	[Mains voltage]	in V
	[Motor thermal state]	as a %
	[Drv. thermal state]	as a %
	[Consumption]	in Wh or kWh depending on drive rating
	[Run time]	in hours (length of time the motor has been switched on)
	[Power on time]	in hours (length of time the drive has been switched on)
	[IGBT alarm counter]	in seconds (total time of IGBT overheating alarms)
	[Min. freq time]	in seconds
	[PID reference]	as a %
	[PID feedback]	as a %
	[PID error]	as a %
	[PID Output]	in Hz
	[Config. active]	CNF0, 1 or 2 (see page 229)
	[Utilised param. set]	SET1, 2 or 3 (see page 227)

Select the parameter using ENT (a ☑ then appears next to the parameter). Parameter(s) can also be deselected using ENT.
1 or 2 parameters can be selected.

Example:

PARAM. BAR SELECT	
MONITORING	
---------	☑
---------	☐
---------	☐
---------	☑

Parameters described in this page can be accessed by: ITF- > MCF- > MSC-

Monitor screen type

Code	Name / Description	Factory setting
MSC-	**[MONITOR SCREEN TYPE]**	
Mdt	**[Display value type]** **[Digital]** (dEC) **[Bar graph]** (bAr) **[List]** (LIST)	**[Digital]** (dEC)
MPC	**[PARAMETER SELECTION]**	
★	**[AI1]** in V **[AI2]** in V **[AI3]** in mA **[AO1]** in V **[ETA state world]** **[Alarm groups]** **[Frequency ref.]** in Hz: parameter displayed in factory configuration **[Output frequency]** in Hz **[Pulse in. work. freq.]** in A: parameter displayed in factory configuration **[Motor current]** in Hz **[Motor speed]** in rpm **[Motor voltage]** in V **[Motor power]** in W **[Motor torque]** as a % **[Mains voltage]** in V **[Motor thermal state]** as a % **[Drv. thermal state]** as a % **[Consumption]** in Wh or kWh depending on drive rating **[Run time]** in hours (length of time the motor has been switched on) **[Power on time]** in hours (length of time the drive has been switched on) **[IGBT alarm counter]** in seconds (total time of IGBT overheating alarms) **[Min. freq time]** in seconds **[PID reference]** as a % **[PID feedback]** as a % **[PID error]** as a % **[PID Output]** in Hz Select the parameter(s) using ENT (a ✓ then appears next to the parameter). Parameter(s) can also be deselected using ENT. PARAMETER SELECTION MONITORING --------- ✓ --------- --------- --------- ✓ Examples include: Display of 2 digital values RUN Term +35.0 Hz 80.0 A Motor speed 1250 rpm Motor current 80 A Quick Display of 2 bar graphs RUN Term +35.0 Hz 80.0 A Min Motor speed max 0 1250 rpm 1500 Min Motor current max 0 80 A 150 Quick Display of a list of 5 values RUN Term +35.0 Hz 80.0 A 1.2 MONITORING Frequency ref. : 50.1Hz Motor current: 80 A Motor speed: 1250 rpm Motor thermal state: 80% Drv thermal state : 80% Quick	

★ These parameters only appear if the corresponding function has been selected in another menu. When the parameters can also be accessed and adjusted from within the configuration menu for the corresponding function, their description is detailed in these menus, on the pages indicated, to aid programming.

Parameter that can be modified during operation or when stopped.

Parameters described in this page can be accessed by: ITF- > MCF- > ADL-

Communication map configuration

Code	Name / Description	Factory setting
ADL-	**[COM. MAP CONFIG.]**	
IAd1	**[Word 1 add. select.]** Select the address of the word to be displayed by pressing the << and >> (F2 and F3) keys and rotating the jog dial.	0
FAd1	**[Format word 1]** Format of word 1. HE **[Hex]** (HE) SIG **[Signed]** (SIG) nSG **[Unsigned]** (nSG)	**[Hex]** (HE)
IAd2	**[Word 2 add. select.]** Select the address of the word to be displayed by pressing the << and >> (F2 and F3) keys and rotating the jog dial.	0
FAd2	**[Format word 2]** Format of word 2. HE **[Hex]** (HE) SIG **[Signed]** (SIG) nSG **[Unsigned]** (nSG)	**[Hex]** (HE)
IAd3	**[Word 3 add. select.]** Select the address of the word to be displayed by pressing the << and >> (F2 and F3) keys and rotating the jog dial.	0
FAd3	**[Format word 3]** Format of word 3. HE **[Hex]** (HE) SIG **[Signed]** (SIG) nSG **[Unsigned]** (nSG)	**[Hex]** (HE)
IAd4	**[Word 4 add. select.]** Select the address of the word to be displayed by pressing the << and >> (F2 and F3) keys and rotating the jog dial.	0
FAd4	**[Format word 4]** Format of word 4. HE **[Hex]** (HE) SIG **[Signed]** (SIG) nSG **[Unsigned]** (nSG) Then, it will be possible to view the selected words in the **[COMMUNICATION MAP]** submenu of the **[1.2 MONITORING]** menu. Example: RUN Term +35.0 Hz 80.0 A COMMUNICATION MAP - W3141: F230 Hex << >> Quick	**[Hex]** (HE)

Parameter that can be modified during operation or when stopped.

Display configuration (dCF)

This menu can only be accessed with the graphic display terminal. It can be used to customize parameters or a menu and to access parameters.

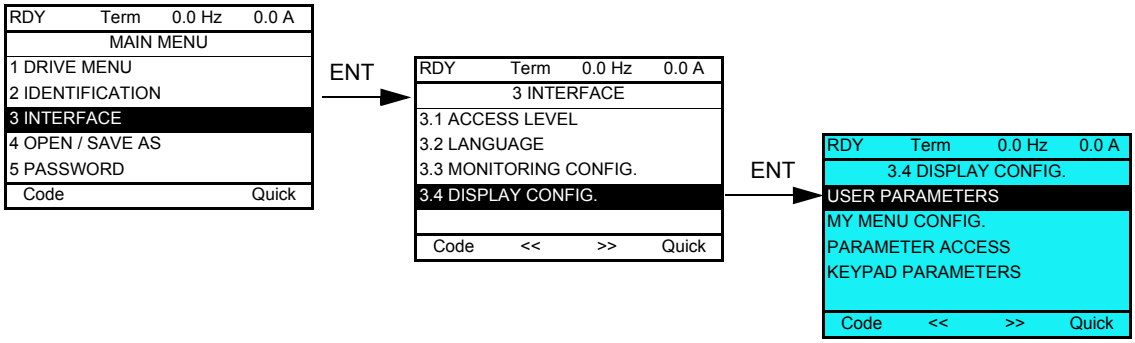

- USER PARAMETERS: Customization of 1 to 15 parameters.
- MY MENU: Creation of a customized menu.
- PARAMETER ACCESS: Customization of the visibility and protection mechanisms of menus and parameters.
- KEYPAD PARAMETERS: Adjustment of the contrast and stand-by mode of the graphic display terminal (parameters stored in the terminal rather than in the drive).

Code	Name / Description
dCF-	**[3.4 DISPLAY CONFIG]**

User parameters

If **[Return std name]** is set to **[Yes]**, the display reverts to standard but the custom settings remain stored.

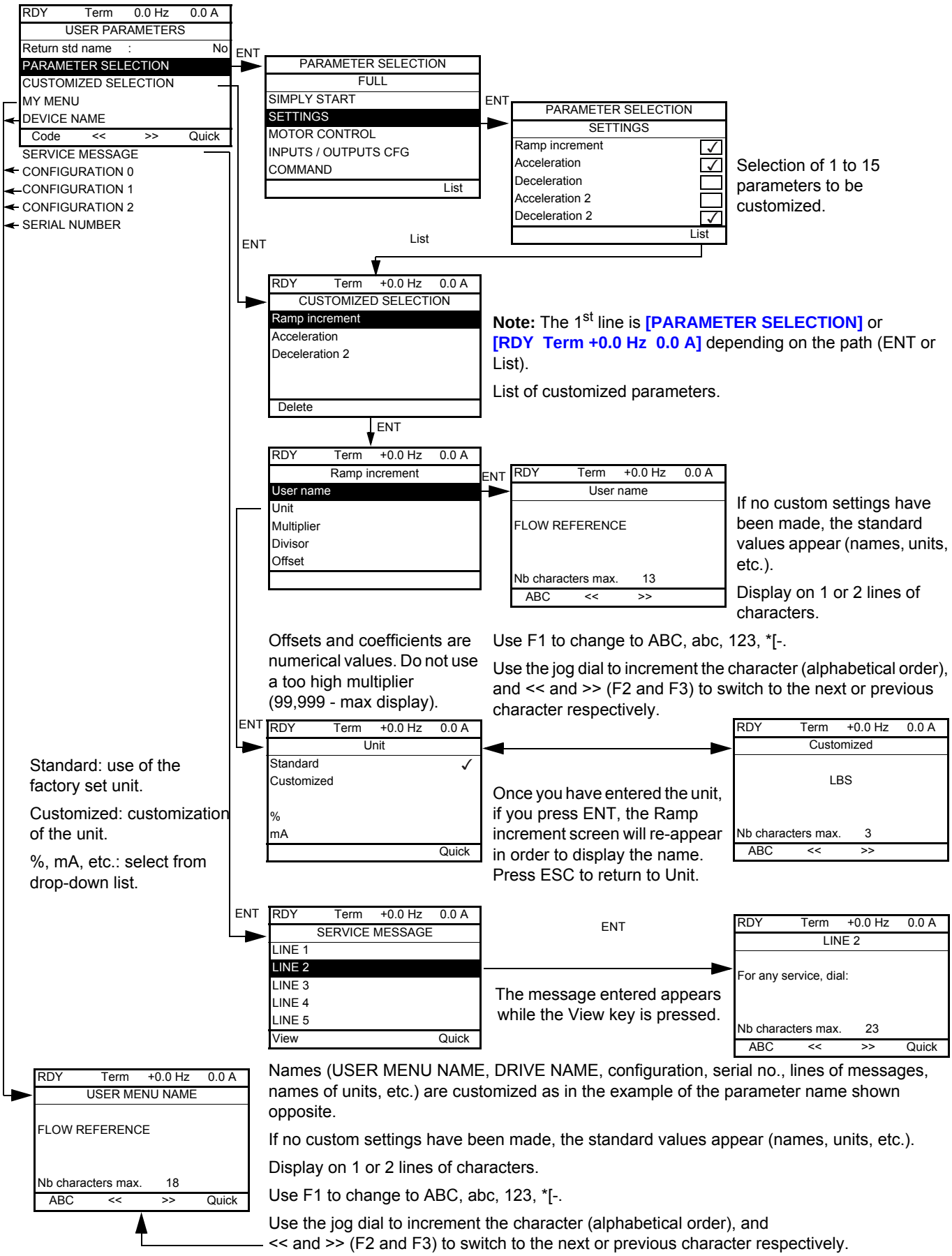

Parameters described in this page can be accessed by: ITF- > DCF- > CUP-

Code	Name / Description	Factory setting
CUP-	**[USER PARAMETERS]**	
GSP	**[Return std name]** Display standard parameters instead of customised ones. nO **[No]** (nO) YES **[Yes]** (YES)	**[No]** (nO)
MYMM	**[MY MENU]**	
PAn	**[DEVICE NAME]**	
SEr-	**[SERVICE MESSAGE]**	
SMLO1	**[LINE 1]**	
SMLO2	**[LINE 2]**	
SMLO3	**[LINE 3]**	
SMLO4	**[LINE 4]**	
SMLO5	**[LINE 5]**	
CFM01	**[CONFIGURATION 0]**	
CFM02	**[CONFIGURATION 1]**	
CFM03	**[CONFIGURATION 2]**	
PSn	**[SERIAL NUMBER]**	

Parameter that can be modified during operation or when stopped.

My Menu config.

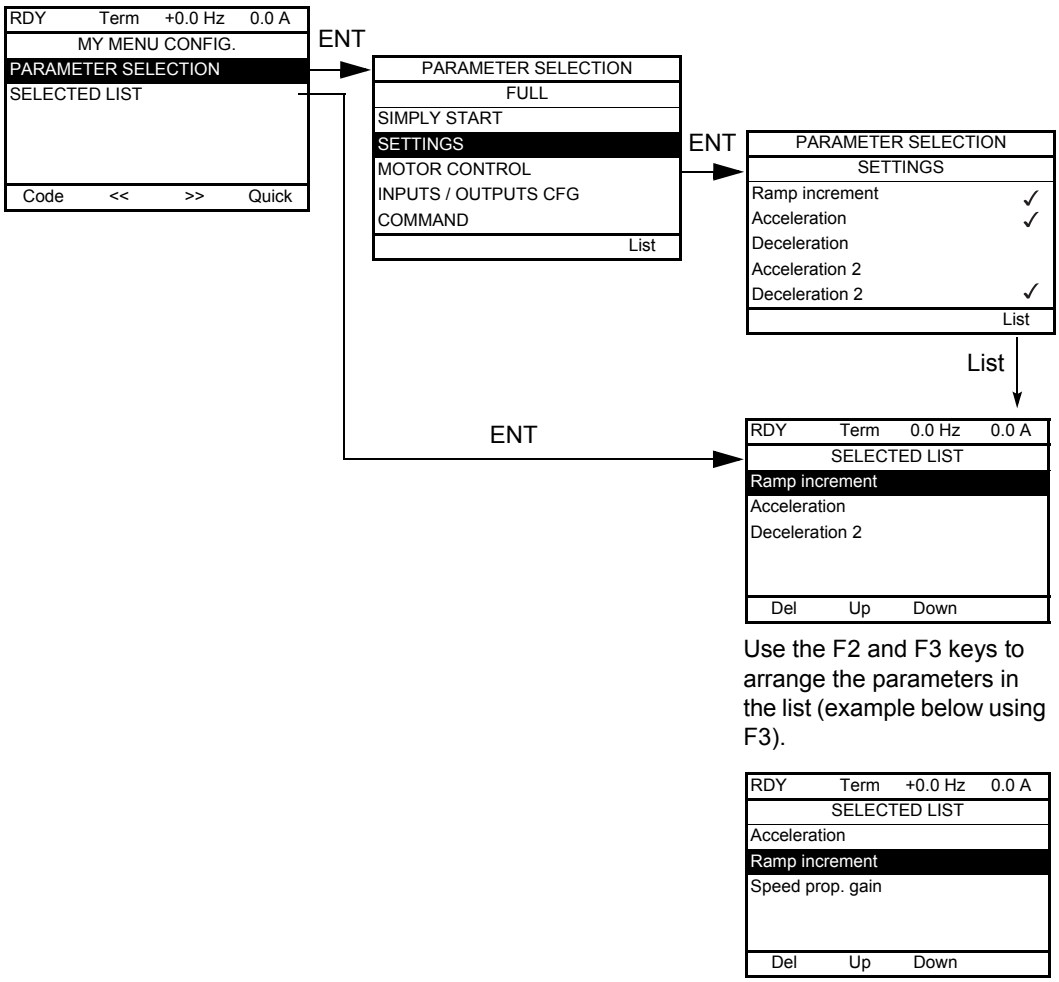

Selection of parameters included in the user menu.

Note: The 1st line is **[PARAMETER SELECTION]** or **[RDY Term +0.0 Hz 0.0 A]** depending on the path (ENT or List).

Parameter list making up the user menu.

Use the F2 and F3 keys to arrange the parameters in the list (example below using F3).

Code	Name / Description
MYC -	**[MY MENU CONFIG.]**

Parameter access

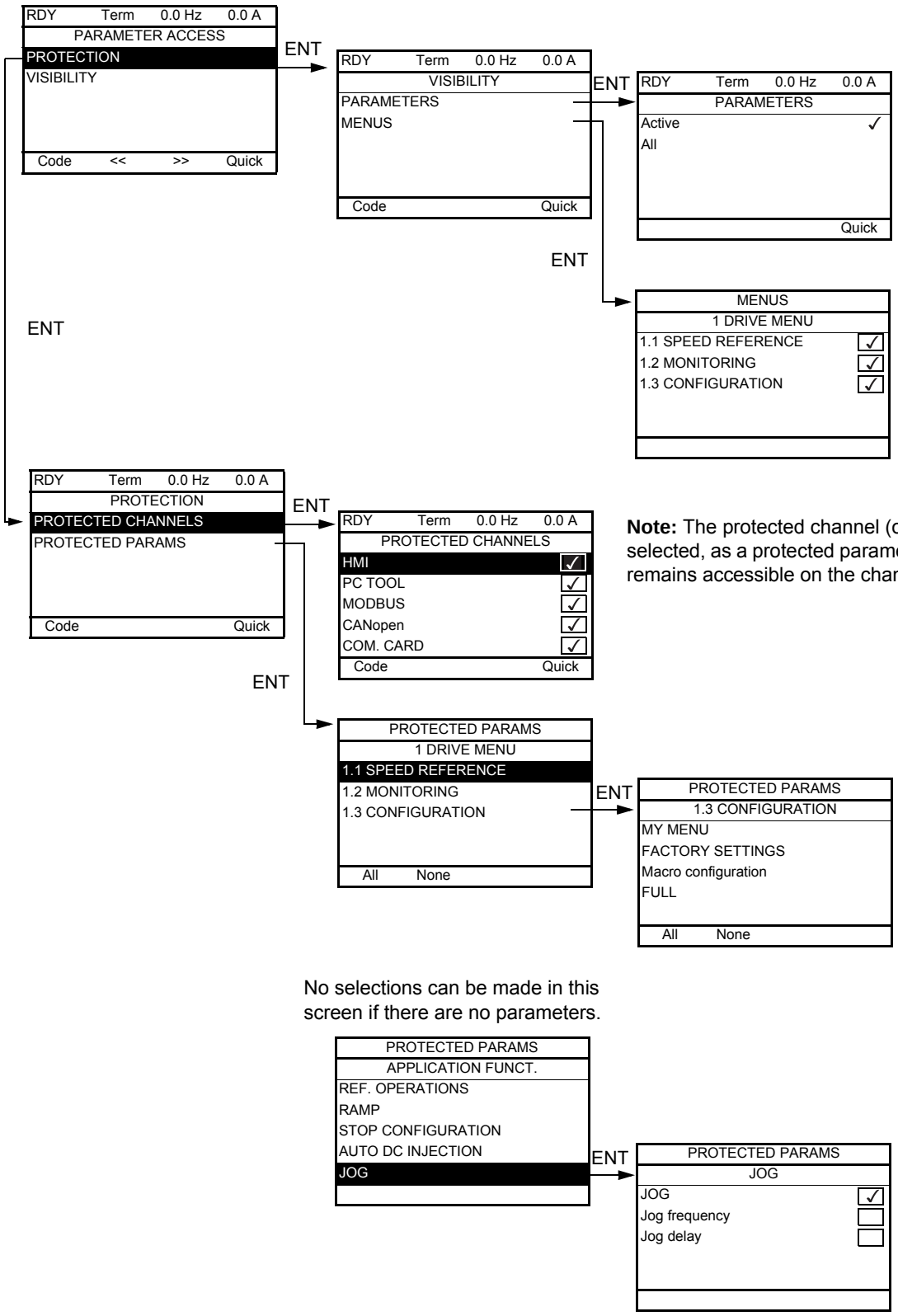

Selection to display all parameters or only the active parameters.

Press ESC to exit this screen.

You remain exclusively in the **[1 DRIVE MENU]** menu. All menus are selected by default.

Press ENT to deselect a menu.

Press ENT to reselect a menu.

Note: The protected channel (or channels) must be selected, as a protected parameter on a selected channel remains accessible on the channels that are not selected.

In these screens, all parameters in the **[1 DRIVE MENU]** menu can be protected and are displayed for selection, except for the Expert parameters.

Press the All key to select all the parameters. Press the All key again to deselect all the parameters.

No selections can be made in this screen if there are no parameters.

Note: The protected parameters are no longer accessible and are not, therefore, displayed for the selected channels.

Parameters described in this page can be accessed by: ITF- > DCF- > PAC- > PRO- > PCD-

Code	Name / Description	Factory setting
PAC-	**[PARAMETER ACCESS]**	
PrO-	**[PROTECTION]**	
PCd-	**[PROTECTED CHANNELS]**	
Con	**[HMI]** (Con): Graphic display terminal or remote display terminal	
PS	**[PC Tool]** (PS): PC Software	
Mdb	**[Modbus]** (Mdb): Integrated Modbus	
CAn	**[CANopen]** (CAn): Integrated CANopen®	
nEt	**[Com. card]** (nEt): Communication card (if inserted)	
UIS-	**[VISIBILITY]**	
PUIS	**[PARAMETERS]**	**[Active]** (ACt)
( )	Parameter visibility: only active ones, or all parameters.	
ACt	**[Active]** (ACt)	
ALL	**[All]** (ALL)	

( ) Parameter that can be modified during operation or when stopped.

Parameters described in this page can be accessed by: ITF- > DCF- > CNL-

Keypad parameters

RDY	Term	0.0 Hz	0.0 A
KEYPAD PARAMETERS			
Keypad contrast	:		50%
Keypad stand-by	:		5 min
Code	<<	>>	Quick

Code	Name / Description	Adjustment range	Factory setting
CnL-	**[KEYPAD PARAMETERS]**		
CrSt	**[Keypad contrast]** Contrast of the keypad.	0 to 100%	50%
CSbY nO	**[Keypad stand-by]** Graphic keypad standby delay. **[No]** (nO): No	**[No]** (nO) to 10 min	5 min

Parameter that can be modified during operation or when stopped.

Open / Save as (trA)

8

This menu can only be accessed with the graphic display terminal.

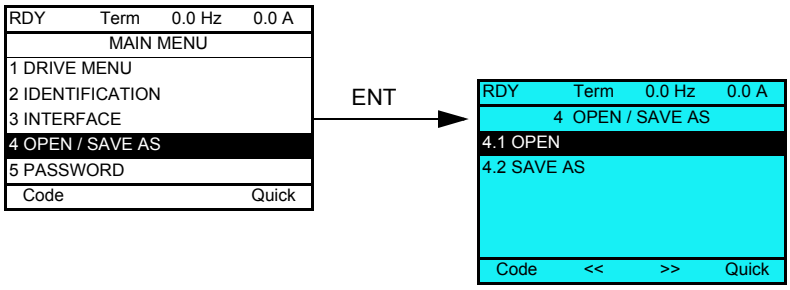

[4.1 OPEN]: To download one of the 4 files from the graphic display terminal to the drive.

[4.2 SAVE AS]: To download the current drive configuration to the graphic display terminal.

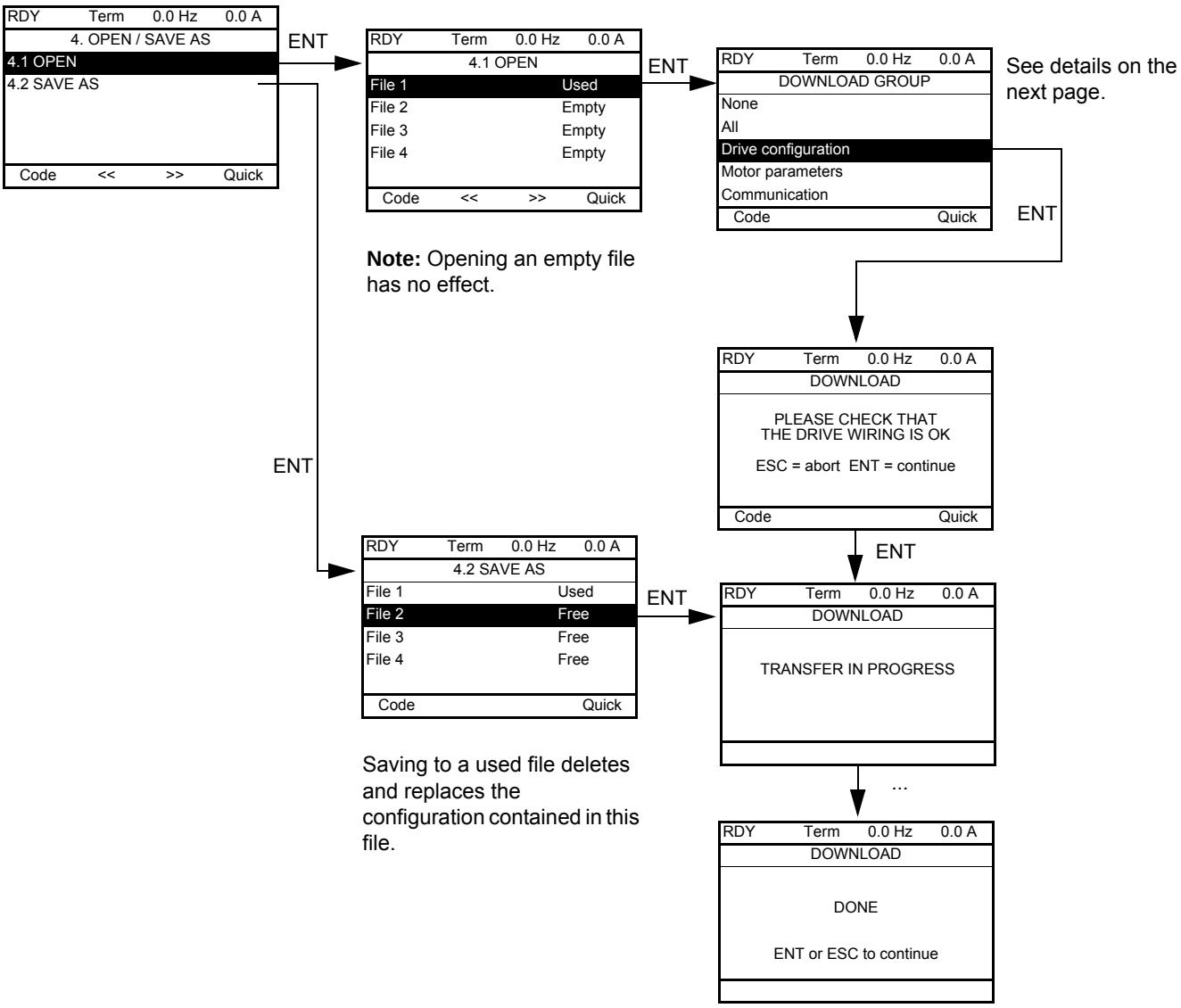

Various messages may appear when the download is requested:

- **[TRANSFER IN PROGRESS]**
- **[DONE]**
- Error messages if download not possible
- **[Motor parameters are NOT COMPATIBLE. Do you want to continue?]**: In this case, the download is possible, but the parameters will be restricted.

DOWNLOAD GROUP

[None]:		No parameters
[All]:		All parameters in all menus
[Drive configuration]:		The entire **[1 DRIVE MENU]** without **[COMMUNICATION]**
[Motor parameters]:	**[Rated motor volt.]** (UnS)	In the **[MOTOR CONTROL]** (drC-) menu
	[Rated motor freq.] (FrS)	
	[PSI align curr. max] (MCr)	
	[Rated motor speed] (nSP)	
	[Motor 1 Cosinus phi] (COS)	
	[Rated motor power] (nPr)	
	[Motor param choice] (MPC)	
	[Tune selection] (StUn)	
	[Mot. therm. current] (ItH)	
	[IR compensation] (UFr)	
	[Slip compensation] (SLP)	
	[Cust stator resist.] (rSA)	
	[Lfw] (LFA)	
	[Cust. rotor t const.] (trA)	
	[Nominal I sync.] (nCrS)	
	[Nom motor spdsync] (nSPS)	
	[Pole pairs] (PPnS)	
	[Syn. EMF constant] (PHS)	
	[Autotune L d-axis] (LdS)	
	[Autotune L q-axis] (LqS)	
	[Nominal freq sync.] (FrSS)	
	[Cust. stator R syn] (rSAS)	
	[Motor torque] (tqS)	
	[U1] (U1)	
	[F1] (F1)	
	[U2] (U2)	
	[F2] (F2)	
	[U3] (U3)	
	[F3] (F3)	
	[U4] (U4)	
	[F4] (F4)	
	[U5] (U5)	
	[F5] (F5)	
	The motor parameters that can be accessed in **[Expert]** (EPr) mode, page 258.	
	[Mot. therm. current] (ItH)	In the **[SETTINGS]** (SEt-) menu
[Communication] :		All the parameters in the **[COMMUNICATION]** menu

Password (COd)

9

With graphic display terminal

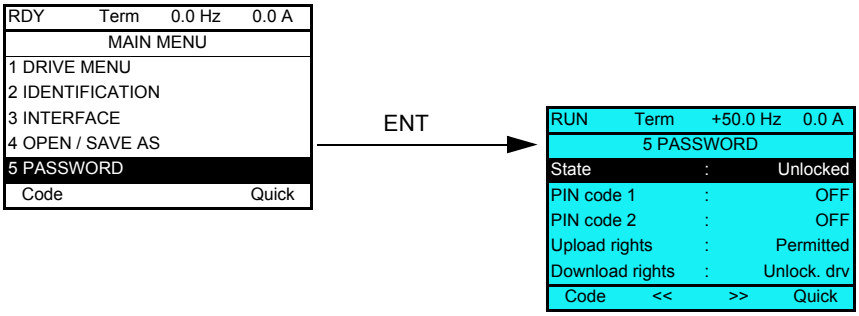

With integrated display terminal

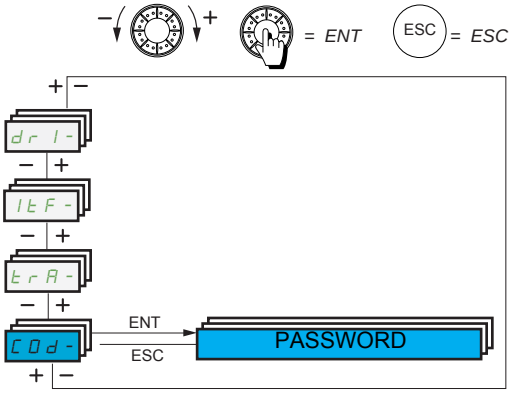

Enables the configuration to be protected with an access code or a password to be entered in order to access a protected configuration.

Example with graphic display terminal:

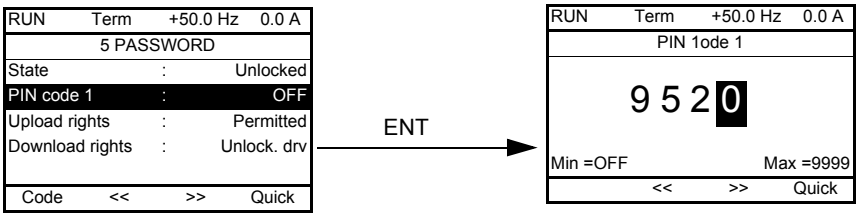

- The drive is unlocked when the PIN codes are set to **[Unlocked]** (OFF) (no password) or when the correct code has been entered. All menus are visible.
- Before protecting the configuration with an access code, you must:
  - Define the **[Upload rights]** (ULr) and **[Download rights]** (dLr).
  - Make a careful note of the code and keep it in a place where you will be able to find it.

- The drive has 2 access codes, enabling 2 access levels to be set up:
  - PIN code 1 is a public unlock code: 6969.
  - PIN code 2 is an unlock code known only to Schneider Electric Product Support. It can only be accessed in **[Expert]** (EPr) mode.
  - Only one PIN1 or PIN2 code can be used, the other must remain set to **[OFF]** (OFF).

Note: When the unlock code is entered, the user access code appears.

The following items are access-protected:
- Return to factory settings (**[FACTORY SETTINGS]** (FCS-) menu.
- The channels and parameters protected by the **[MY MENU]** (MYMn-) as well as the menu itself.
- The custom display settings (**[3.4 DISPLAY CONFIG.]** (dCF-) menu).

Code	Name / Description	Adjustment range	Factory setting
COd-	**[5 PASSWORD]**		
CSt	**[State]**		**[Unlocked]** (ULC)
	Information parameter, cannot be modified. LC **[Locked]** (LC): The drive is locked by a password ULC **[Unlocked]** (ULC): The drive is not locked by a password		
COd	**[PIN code 1]**	**[OFF]** (OFF) to 9,999	**[OFF]** (OFF)
	1st access code. The value **[OFF]** (OFF) indicates that no password has been set **[Unlocked]** (ULC). The value **[ON]** (On) indicates that the drive is protected and an access code must be entered in order to unlock it. Once the correct code has been entered, it remains on the display and the drive is unlocked until the next time the power supply is disconnected. PIN code 1 is a public unlock code: 6969.		
COd2	**[PIN code 2]**	**[OFF]** (OFF) to 9,999	**[OFF]** (OFF)
	This parameter can only be accessed in **[Expert]** (EPr) mode. 2nd access code. The value **[OFF]** (OFF) indicates that no password has been set **[Unlocked]** (ULC). The value **[ON]** (On) indicates that the drive is protected and an access code must be entered in order to unlock it. Once the correct code has been entered, it remains on the display and the drive is unlocked until the next time the power supply is disconnected. PIN code 2 is an unlock code known only to Schneider Electric Product Support. When **[PIN code 2]** (COd2) is not set to **[OFF]** (OFF), the **[1.2 MONITORING]** (MOn-) menu is the only one visible. Then if **[PIN code 2]** (COd2) is set to **[OFF]** (OFF) (drive unlocked), all menus are visible. If the display settings are modified in **[3.4 DISPLAY CONFIG.]** (dCF-) menu, and if **[PIN code 2]** (COd2) is not set to **[OFF]** (OFF), the visibility configured is kept. Then if **[PIN code 2]** (COd2) is set to OFF (drive unlocked), the visibility configured in **[3.4 DISPLAY CONFIG.]** (dCF-) menu is kept.		
ULr	**[Upload rights]**		**[Permitted]** (ULr0)
	Reads or copies the current configuration to the drive. ULr0 **[Permitted]** (ULr0): The current drive configuration can be uploaded to the graphic display terminal or PC Software. ULr1 **[Not allowed]** (ULr1): The current drive configuration can only be uploaded to the graphic display terminal or PC Sofware if the drive is not protected by an access code or if the correct code has been entered.		
dLr	**[Download rights]**		**[Unlock. drv]** (dLr1)
	Writes the current configuration to the drive or downloads a configuration to the drive. dLr0 **[Locked drv]** (dLr0): A configuration file can only be downloaded to the drive if the drive is protected by an access code, which is the same as the access code for the configuration to be downloaded. dLr1 **[Unlock. drv]** (dLr1): A configuration file can be downloaded to the drive or a configuration in the drive can be modified if the drive is unlocked (access code entered) or is not protected by an access code. dLr2 **[Not allowed]** (dLr2): Download not authorized. dLr3 **[Lock/unlock]** (dLr3): Combination of **[Locked drv.]** (dLr0) and **[Unlock. drv]** (dLr1).		

Multipoint Screen

10

Multipoint Screen

Communication is possible between a graphic display terminal and a number of drives connected on the same bus. The addresses of the drives must be configured in advance in the **[COMMUNICATION]** (COM-) menu using the **[Modbus Address]** (Add) parameter, page 273.

When a number of drives are connected to the same graphic display terminal, it automatically displays the following screens:

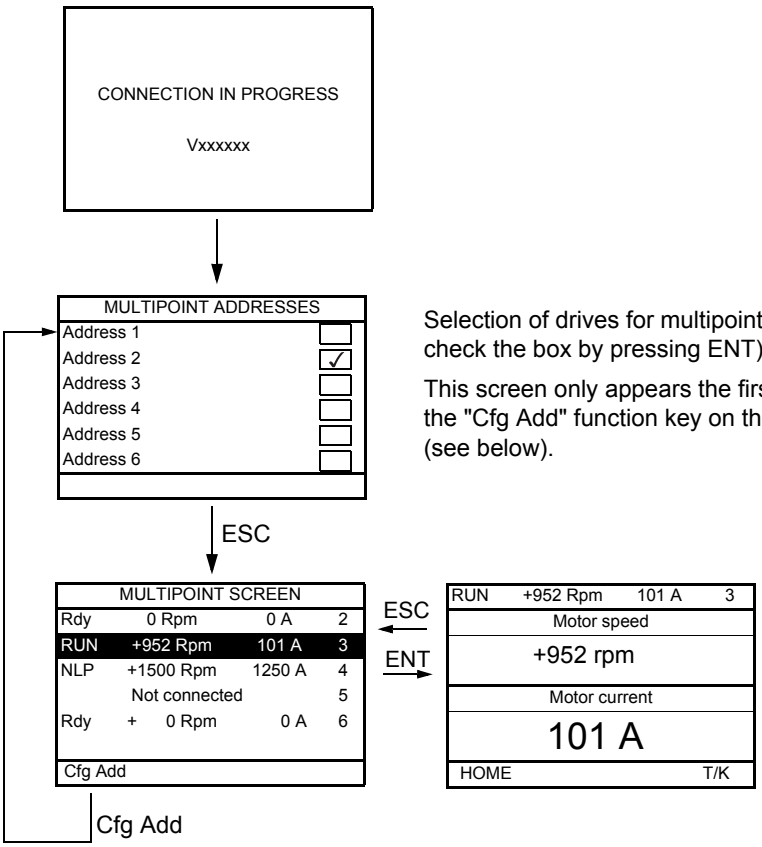

Selection of drives for multipoint dialog (select each address and check the box by pressing ENT).

This screen only appears the first time the drive is powered up, or if the "Cfg Add" function key on the MULTIPOINT SCREEN is pressed (see below).

Selection of a drive for multipoint dialog.

In multipoint mode, the command channel is not displayed. From left to right, the state, then the 2 selected parameters, and finally the drive address appear.

All menus can be accessed in multipoint mode. Only drive control via the graphic display terminal is not authorized, apart from the Stop key, which locks all the drives.

If there is a trip on a drive, this drive is displayed.

Maintenance and Diagnostics

III

What's in this Part?

This part contains the following chapters:

Chapter	Chapter Name	Page
11	Maintenance	303
12	Diagnostics and Troubleshooting	305

Maintenance

11

Limitation of Warranty

The warranty does not apply if the product has been opened, except by Schneider Electric services.

Servicing

CAUTION
RISK OF DAMAGE TO THE DRIVE Adapt the following recommendations according to the environment conditions: temperature, chemical, dust. **Failure to follow these instructions can result in equipment damage.**

It is recommended to do the following in order to optimize continuity of operation.

Environment	Part concerned	Action	Periodicity
Knock on the product	Housing - control block (led - display)	Check the drive visual aspect	At least each year
Corrosion	Terminals - connector - screws - EMC plate	Inspect and clean if required	
Dust	Terminals - fans - blowholes		
Temperature	Around the product	Check and correct if required	
Cooling	Fan	Check the fan operation	
		Replace the fan	After 3 to 5 years, depending on the operating conditions
Vibration	Terminal connections	Check tightening at recommended torque	At least each year

Note: The fan operation depends on the drive thermal state. The drive may be running and the fan not.

Spares and repairs

Serviceable product. Please refer to your Customer Care Centre.

Long time storage

The product capacitor performances after a long time storage above 2 years can be degraded. See page 10.

Fan replacement

It is possible to order a new fan for the ATV32 maintenance, see the commercial references on www.schneider-electric.com.

Please refer to Installation manual to replace the fan.

Diagnostics and Troubleshooting

12

What's in this Chapter?

This chapter contains the following topics:

Topic	Page
Error code	306
Clearing the detected fault	306
Fault detection codes which require a power reset after the detected fault is cleared	307
Fault detection codes that can be cleared with the automatic restart function after the cause has disappeared	309
Fault detection codes that are cleared as soon as their cause disappears	312
Option card changed or removed	312
Control block changed	312
Fault detection codes displayed on the remote display terminal	313

⚠ ⚠ DANGER

HAZARD OF ELECTRIC SHOCK, EXPLOSION OR ARC FLASH

Read and understand the precautions in "About the book" chapter, before performing any procedure in this section.

Failure to follow these instructions will result in death or serious injury.

Error code

- If the display does not light up, check the power supply to the drive.
- The assignment of the Fast stop or Freewheel functions will help to prevent the drive starting if the corresponding logic inputs are not powered up. The ATV32 then displays **[Freewheel]** (nSt) in freewheel stop and **[Fast stop]** (FSt) in fast stop. This is normal since these functions are active at zero so that the drive will be stopped if there is a wire break.
- Check that the run command input is activated in accordance with the selected control mode (**[2/3 wire control]** (tCC) and **[2 wire type]** (tCt) parameters, page 83).
- If an input is assigned to the limit switch function and this input is at zero, the drive can only be started up by sending a command for the opposite direction (see page 221).
- If the reference channel or command channel is assigned to a communication bus, when the power supply is connected, the drive will display **[Freewheel]** (nSt) and remain in stop mode until the communication bus sends a command.

Code	Name / Description
dGt-	**[DIAGNOSTICS]** This menu can only be accessed with the graphic display terminal. It displays detected faults and their cause in plain text and can be used to carry out tests, see page 62.

Clearing the detected fault

In the event of a non resettable detected fault:

- Disconnect all power, including external control power that may be present.
- Lock all power disconnects in the open position.
- Wait 15 minutes to allow the DC bus capacitors to discharge (the drive LEDs are not indicators of the absence of DC bus voltage).
- Measure the voltage of the DC bus between the PA/+ and PC/– terminals to ensure that the voltage is less than 42 Vdc.
- If the DC bus capacitors do not discharge completely, contact your local Schneider Electric representative. Do not repair or operate the drive.
- Find and correct the detected fault.
- Restore power to the drive to confirm the detected fault has been rectified.

In the event of a resettable detected fault, the drive can be reset after the cause is cleared:

- By switching off the drive until the display disappears completely, then switching on again.
- Automatically in the scenarios described for the **[AUTOMATIC RESTART]** (Atr-) function, page 249.
- By means of a logic input or control bit assigned to the **[FAULT RESET]** (rSt-) function, page 247.
- By pressing the STOP/RESET key on the graphic display keypad if the active channel command is the HMI (see **[Cmd channel 1]** (Cd1) page 152).

Fault detection codes which require a power reset after the detected fault is cleared

The cause of the detected fault must be removed before resetting by turning off and then back on.

ASF, brF, SOF, SPF and tnF detected faults can also be cleared remotely by means of a logic input or control bit (**[Fault reset]** (rSF) parameter, page 247).

Detected Fault	Name	Probable cause	Remedy
AnF	**[Load slipping]**	• The difference between the output frequency and the speed feedback is not correct.	• Check the motor, gain and stabillity parameters. • Add a braking resistor. • Check the size of the motor/drive/load. • Check the encoder's mechanical coupling and its wiring. • Check the setting of parameters
ASF	**[Angle Error]**	• This occurs during the phase-shift angle measurement, if the motor phase is disconnected or if the motor inductance is too high.	• Check the motor phases and the maximum current allowed by the drive.
brF	**[Brake feedback]**	• The brake feedback contact does not match the brake logic control. • The brake does not stop the motor quickly enough (detected by measuring the speed on the "Pulse input" input).	• Check the feedback circuit and the brake logic control circuit. • Check the mechanical state of the brake. • Check the brake linings.
CrF1	**[Precharge]**	• Charging relay control detected fault or charging resistor damaged.	• Turn the drive off and then turn on again. • Check the internal connections. • Contact Schneider Electric Product Support.
EEF1	**[Control Eeprom]**	• Internal memory detected fault, control block.	• Check the environment (electromagnetic compatibility). • Turn off, reset, return to factory settings. • Contact Schneider Electric Product Support.
EEF2	**[Power Eeprom]**	• Internal memory detected fault, power card.	
FCF1	**[Out. contact. stuck]**	• The output contactor remains closed although the opening conditions have been met.	• Check the contactor and its wiring. • Check the feedback circuit.
HdF	**[IGBT desaturation]**	• Short-circuit or grounding at the drive output.	• Check the cables connecting the drive to the motor, and the motor insulation.
ILF	**[internal com. link]**	• Communication interruption between option card and drive.	• Check the environment (electromagnetic compatibility). • Check the connections. • Replace the option card. • Contact Schneider Electric Product Support.
InF1	**[Rating error]**	• The power card is different from the card stored.	• Check the reference of the power card.
InF2	**[Incompatible PB]**	• The power card is incompatible with the control block.	• Check the reference of the power card and its compatibility.
InF3	**[Internal serial link]**	• Communication interruption between the internal cards.	• Check the internal connections. • Contact Schneider Electric Product Support.
InF4	**[Internal-mftg zone]**	• Internal data inconsistent.	• Recalibrate the drive (performed by Schneider Electric Product Support).
InF6	**[Internal - fault option]**	• The option installed in the drive is not recognized.	• Check the reference and compatibility of the option. • Check that the option is well inserted into the ATV32.
InF9	**[Internal- I measure]**	• The current measurements are incorrect.	• Replace the current sensors or the power card. • Contact Schneider Electric Product Support.
InFA	**[Internal-mains circuit]**	• The input stage is not operating correctly.	• Contact Schneider Electric Product Support.
InFb	**[Internal- th. sensor]**	• The drive temperature sensor is not operating correctly.	• Replace the drive temperature sensor. • Contact Schneider Electric Product Support.
InFE	**[internal- CPU]**	• Internal microprocessor detected fault.	• Turn off and reset. • Contact Schneider Electric Product Support.
SAFF	**[Safety fault]**	• Debounce time exceeded. • SS1 trip threshold exceeded. • Wrong configuration. • SLS type trip overspeed detected.	• Check the safety functions configuration. • Check the ATV32 Integrated safety Functions Manual (S1A45606) • Contact Schneider Electric Product Support.

Detected Fault	Name	Probable cause	Remedy
SOF	**[Overspeed]**	• Instability or driving load too high.	• Check the motor, gain and stability parameters. • Add a braking resistor. • Check the size of the motor/drive/load. • Check the parameters settings for the **[FREQUENCY METER]** (F9F-) function page 263, if it is configured.
SPF	**[Speed fdback loss]**	• Signal on "Pulse input" missing, if the input is used for speed measurement. • Encoder feedback signal missing	• Check the wiring of the input cable and the detector used. • Check the configuration parameters of the encoder. • Check the wiring between the encoder and the drive. • Check the encoder.

Fault detection codes that can be cleared with the automatic restart function after the cause has disappeared

These detected faults can also be cleared by turning on and off or by means of a logic input or control bit ([Fault reset] (rSF) parameter page 247).

Detected Fault	Name	Probable cause	Remedy
bLF	[Brake control]	• Brake release current not reached. • Brake engage frequency threshold [Brake engage freq] (bEn) only regulated when brake logic control is assigned.	• Check the drive/motor connection. • Check the motor windings. • Check the [Brake release I FW] (Ibr) and [Brake release I Rev] (Ird) settings page 191. • Apply the recommended settings for [Brake engage freq] (bEn).
CnF	[Com. network]	• Communication interruption on communication card.	• Check the environment (electromagnetic compatibility). • Check the wiring. • Check the time-out. • Replace the option card. • Contact Schneider Electric Product Support.
COF	[CANopen com.]	• Communication interruption on the CANopen® bus.	• Check the communication bus. • Check the time-out. • Refer to the CANopen® User's manual.
EPF1	[External flt-LI/Bit]	• Event triggered by an external device, depending on user.	• Check the device which caused the trip and reset.
EPF2	[External fault com.]	• Event triggered by a communication network.	• Check for the cause of the trip and reset.
FbES	[FB stop flt.]	• Function blocks have been stopped while motor was running.	• Check [Stop FB Stop motor] (FbSM) configuration.
FCF2	[Out. contact. open.]	• The output contactor remains open although the closing conditions have been met.	• Check the contactor and its wiring. • Check the feedback circuit.
LCF	[input contactor]	• The drive is not turned on even though [Mains V. time out] (LCt) has elapsed.	• Check the contactor and its wiring. • Check the time-out. • Check the line/contactor/drive connection.
LFF3	[AI3 4-20mA loss]	• Loss of the 4-20 mA reference on analog input AI3.	• Check the connection on the analog inputs.
ObF	[Overbraking]	• Braking too sudden or driving load. • Line voltage too high.	• Increase the deceleration time. • Install a braking resistor if necessary. • Activate the [Dec ramp adapt.] (brA) function page 169, if it is compatible with the application. • Check the line voltage.
OCF	[Overcurrent]	• Parameters in the [SETTINGS] (SEt-) and [MOTOR CONTROL] (drC-) menus are not correct. • Inertia or load too high. • Mechanical locking.	• Check the parameters. • Check the size of the motor/drive/load. • Check the state of the mechanism. • Decrease [Current limitation] (CLI). • Increase the switching frequency.
OHF	[Drive overheat]	• Drive temperature too high.	• Check the motor load, the drive ventilation and the ambient temperature. Wait for the drive to cool down before restarting.
OLC	[Proc. overload flt]	• Process overload.	• Check and remove the cause of the overload. • Check the parameters of the [PROCESS OVERLOAD] (OLd-) function, page 269.
OLF	[Motor overload]	• Triggered by excessive motor current.	• Check the setting of the motor thermal protection, check the motor load. Wait for the motor to cool down before restarting.
OPF1	[1 output phase loss]	• Loss of one phase at drive output.	• Check the connections from the drive to the motor.

Detected Fault	Name	Probable cause	Remedy
OPF2	[3 motor phase loss]	• Motor not connected or motor power too low. • Output contactor open. • Instantaneous instability in the motor current.	• Check the connections from the drive to the motor. • If an output contactor is being used, set [Output Phase Loss] (OPL) to [Output cut] (OAC), page 253. • Test on a low power motor or without a motor: In factory settings mode, motor phase loss detection is active [Output Phase Loss] (OPL) = [Yes] (YES). To check the drive in a test or maintenance environment, without having to use a motor with the same rating as the drive (in particular for high power drives), deactivate motor phase loss detection [Output Phase Loss] (OPL) = [No] (nO), see instructions given page 253. • Check and optimize the following parameters: [IR compensation] (UFr) page 88, [Rated motor volt.] (UnS) and [Rated mot. current] (nCr) page 84 and perform [Auto tuning] (tUn) page 85.
OSF	[Mains overvoltage]	• Line voltage too high. • Disturbed mains supply.	• Check the line voltage.
OtFL	[LI6=PTC overheat]	• Overheating of PTC probes detected on input LI6.	• Check the motor load and motor size. • Check the motor ventilation. • Wait for the motor to cool before restarting. • Check the type and state of the PTC probes.
PtFL	[LI6=PTC probe]	• PTC probe on input LI6 open or short-circuited.	• Check the PTC probe and the wiring between it and the motor/drive.
SCF1	[Motor short circuit]	• Short-circuit or grounding at the drive output.	• Check the cables connecting the drive to the motor, and the motor insulation. • Reduce the switching frequency. • Connect chokes in series with the motor. • Check the adjustment of speed loop and brake. • Increase the [Time to restart] (ttr), page 98. • Increase the switching frequency.
SCF3	[Ground short circuit]	• Significant earth leakage current at the drive output if several motors are connected in parallel.	• Check the cables connecting the drive to the motor, and the motor insulation. • Reduce the switching frequency. • Connect chokes in series with the motor. • Check the adjustment of speed loop and brake. • Increase the [Time to restart] (ttr), page 98. • Reduce the switching frequency.
SCF4	[IGBT short circuit]	• Power component detected fault.	• Contact Schneider Electric Product Support.
SCF5	[Motor short circuit]	• Short-circuit at drive output.	• Check the cables connecting the drive to the motor, and the motor's insulation. • Contact Schneider Electric Product Support.
SLF1	[Modbus com.]	• Communication interruption on the Modbus bus.	• Check the communication bus. • Check the time-out. • Refer to the Modbus User's manual.
SLF2	[PC com.]	• Communication interruption with PC Software.	• Check the PC Software connecting cable. • Check the time-out.
SLF3	[HMI com.]	• Communication interruption with the graphic display terminal or remote display terminal.	• Check the terminal connection • Check the time-out.
SSF	[Torque/current lim]	• Switch to torque or current limitation.	• Check if there are any mechanical problems. • Check the parameters of [TORQUE LIMITATION] (tOL-) page 213 and the parameters of the [TORQUE OR I LIM. DETECT.] (tId-), page 261.
tJF	[IGBT overheat]	• Drive overheated.	• Check the size of the load/motor/drive. • Reduce the switching frequency. • Wait for the motor to cool before restarting.

Detected Fault	Name	Probable cause	Remedy
tnF	**[Auto-tuning]**	• Special motor or motor whose power is not suitable for the drive. • Motor not connected to the drive. • Motor not stopped	• Check that the motor/drive are compatible. • Check that the motor is present during auto-tuning. • If an output contactor is being used, close it during auto-tuning. • Check that the motor is stopped during tune operation.
ULF	**[Proc. underload Flt]**	• Process underload.	• Check and remove the cause of the underload. • Check the parameters of the **[PROCESS UNDERLOAD]** (Ul Id -) function, page 267.

Fault detection codes that are cleared as soon as their cause disappears

Detected Fault	Name	Probable cause	Remedy
CFF	[Incorrect config.]	• Option card changed or removed. • Control block replaced by a control block configured on a drive with a different rating. • The current configuration is inconsistent.	• Check that there are no card errors. • In the event of the option card being changed/removed deliberately, see the remarks below. • Check that there are no card errors. • In the event of the control block being changed deliberately, see the remarks below. • Return to factory settings or retrieve the backup configuration, if it is valid (see page 79).
CF1 CF12	[Invalid config.]	• Invalid configuration. The configuration loaded in the drive via the bus or communication network is inconsistent.	• Check the configuration loaded previously. • Load a compatible configuration.
CSF	[Ch. Sw. fault]	• Switch to not valid channels.	• Check the function parameters.
dLF	[Dynamic load fault]	• Abnormal load variation.	• Check that the load is not blocked by an obstacle. • Removal of a run command causes a reset.
FbE	[FB fault]	• Function blocks error.	• See [FB Fault] (FbFt) for more details.
HCF	[Cards pairing]	• The [CARDS PAIRING] (PP1-) function page 266 has been configured and a drive card has been changed.	• In the event of a card error, reinsert the original card. • Confirm the configuration by entering the [Pairing password] (PP1) if the card was changed deliberately.
PHF	[Input phase loss]	• Drive incorrectly supplied or a fuse blown. • One phase missing. • 3-phase ATV32 used on a single-phase line supply. • Unbalanced load. This protection only operates with the drive on load.	• Check the power connection and the fuses. • Use a 3-phase line supply. • Disable the detected fault by [Input phase loss] (IPL) = [No] (nO) page 84.
USF	[Undervoltage]	• Line supply too low. • Transient voltage dip.	• Check the voltage and the parameters of [UNDERVOLTAGE MGT] (USb-), page 256.

Option card changed or removed

When an option card is removed or replaced by another, the drive locks in [Incorrect config.] (CFF) fault mode on power-up. If the card has been deliberately changed or removed, the detected fault can be cleared by pressing the ENT key twice, which causes the factory settings to be restored (see page 79) for the parameter groups affected by the card. These are as follows:

Card replaced by a card of the same type

- Communication cards: only the parameters that are specific to communication cards

Control block changed

When a control block is replaced by a control block configured on a drive with a different rating, the drive locks in [Incorrect config.] (CFF) fault mode on power-up. If the control block has been deliberately changed, the detected fault can be cleared by pressing the ENT key twice, which **causes all the factory settings to be restored.**

Fault detection codes displayed on the remote display terminal

Code	Name	Description
In It	**[Initialization in progress]**	The microcontroller is initializing. Search underway for communication configuration.
COM. E (1)	**[Communication error]**	Time out detected fault (50 ms). This message is displayed after 20 attempts at communication.
A - 17 (1)	**[Alarm button]**	A key has been held down for more than 10 seconds. The keypad is disconnected. The keypad wakes up when a key is pressed.
CLr (1)	**[Confirmation of detected fault reset]**	This is displayed when the STOP key is pressed once if the active command channel is the remote display terminal.
dEU. E (1)	**[Drive disparity]**	The drive brand does not match that of the remote display terminal.
rOM. E (1)	**[ROM anomaly]**	The remote display terminal detects a ROM anomaly on the basis of checksum calculation.
rAM. E (1)	**[RAM anomaly]**	The remote display terminal detects a RAM anomaly.
CPU. E (1)	**[Other detected faults]**	Other detected faults.

(1) Flashing

Annex

IV

What's in this Part?

This part contains the following chapters:

Chapter	Chapter Name	Page
13	Index of Functions	317
14	Index of Parameter Codes	319

Index of Functions

13

The following table represents the parameter codes:

Function	Page
[2 wire] (2C)	83
[2nd CURRENT LIMIT.]	215
[3 wire] (3C)	83
[+/- SPEED]	182
[+/-SPEED AROUND REF.]	184
[AUTO DC INJECTION]	173
[AUTOMATIC RESTART]	249
[Auto tuning]	85
[AUTO TUNING BY LI]	233
DC Bus	242
[BRAKE LOGIC CONTROL]	191
[CATCH ON THE FLY]	250
Command and reference channels	143
Deferred stop on thermal alarm	255
[DRIVE OVERHEAT]	254
[ENCODER FAULT]	260
[ENCODER CONFIGURATION]	132
[FACTORY SETTINGS]	79
[Fault reset]	247
[FLUXING BY LI]	186
[HIGH SPEED HOISTING]	202
[DYN CURRENT LIMIT]	216
[JOG]	175
LINE CONTACTOR COMMAND	217
Load measurement	196
[Load sharing]	119
Load variation detection	264
Motor or configuration switching [MULTIMOTORS/CONFIG.] (MMC-)	229
Motor thermal protection	251
[Noise reduction]	117
[OUTPUT CONTACTOR CMD]	220
[Ovld.Proces.Mngmt]	269
[PARAM. SET SWITCHING]	227
[5 PASSWORD]	298
[PID REGULATOR]	207
POSITIONING BY SENSORS	221
PRESET SPEEDS	177
PTC probe	247
[RAMP]	167
[REFERENCE SWITCH.]	164
Rope slack	201

Function	Page
[RP assignment]	125
REFERENCE MEMORIZING	185
[STOP CONFIGURATION]	170
Stop at distance calculated after deceleration limit switch	223
Summing input / Subtracting input / Multiplier	165
Synchronous motor parameters	109
TORQUE LIMITATION	212
TRAVERSE CONTROL	234
[Underload Managmt.]	268
Use of the "Pulse input" input to measure the speed of rotation of the motor	262

Index of Parameter Codes

14

The following table represents the parameter codes:

Code	[1.1 SPEED REFERENCE] (rEF-)	[1.2 MONITORING] (MOn-)	[FACTORY SETTINGS] (FCS-)	[Macro configuration] (CFG)	[SIMPLY START] (SIM-)	[SETTINGS] (SEt-)	[MOTOR CONTROL] (drC-)	[INPUTS / OUTPUTS CFG] (I-O-)	[COMMAND] (CtL-)	[FUNCTION BLOCKS] (FbM-)	[APPLICATION FUNCT.] (FUn-)	[FAULT MANAGEMENT] (FLt-)	[COMMUNICATION] (COM-)	[3 INTERFACE] (ItF-)	CUSTOMER SETTING
AC2						87					168 184 209				
ACC					85	87					167				
AdC											173				
AdCO													274		
Add													273		
AI1A		50						130							
AI1C		50													
AI1E								131							
AI1F		50						131							
AI1S								130							
AI1t								130							
AI2A		50						130							
AI2C		50													
AI2E								131							
AI2F		50						131							
AI2S								131							
AI2t								130							
AI3A		51						131							
AI3C		51													
AI3E								131							
AI3F		51						131							
AI3L								131							
AI3S								131							
AI3t								131							
AIC2								132			207				
AIU1	44	48													
ALGr		61													
AMOC													273		
AO1		51						141							
AO1C		51													
AO1F		51						141							

Code															CUSTOMER SETTING
	[1.1 SPEED REFERENCE] (rEF-)	[1.2 MONITORING] (MOn-)	[FACTORY SETTINGS] (FCS-)	[Macro configuration] (CFG)	[SIMPLY START] (SIM-)	[SETTINGS] (SEt-)	[MOTOR CONTROL] (drC-)	[INPUTS / OUTPUTS CFG] (I_O-)	[COMMAND] (CtL-)	[FUNCTION BLOCKS] (FbM-)	[APPLICATION FUNCT.] (FUn-)	[FAULT MANAGEMENT] (FLt-)	[COMMUNICATION] (COM-)	[3 INTERFACE] (ItF-)	
AOIt								141							
AOHI		51						141							
AOLI		51						141							
APH		60													
ASHI		51						141							
ASLI		51						141							
ASt							112				187				
Atr												249			
AUt							106 111								
AUIA								132							
AU2A								132							
bCI											191				
bdCO													274		
bEd											192				
bEn						98					192				
bEt						98					192				
bFr					84		102								
bIP											191				
bIr						98					192				
bLC											191				
bMP									154						
bnS		53								155					
bnU		53								155					
bOA							117								
bOO							117								
brA											169				
brHO											194				
brHI											194				
brH2											195				
brr											195				
brt						98					191				
bSP								128							
bSt											191				
btPI													274		
btUA													274		
btUC													274		
bUEr		53								155					
CCFG					84										
CCS									152						
Cd1									152						
Cd2									152						
CFG				80	83										

Code															CUSTOMER SETTING
	[1.1 SPEED REFERENCE] (rEF-)	[1.2 MONITORING] (MOn-)	[FACTORY SETTINGS] (FCS-)	[Macro configuration] (CFG)	[SIMPLY START] (SIM-)	[SETTINGS] (SEt-)	[MOTOR CONTROL] (drC-)	[INPUTS / OUTPUTS CFG] (I_O-)	[COMMAND] (CtL-)	[FUNCTION BLOCKS] (FbM-)	[APPLICATION FUNCT.] (FUn-)	[FAULT MANAGEMENT] (FLt-)	[COMMUNICATION] (COM-)	[3 INTERFACE] (ItF-)	
CFPS		60													
CHA1											227				
CHA2											227				
CHCF									151						
CHM											232				
CL2						93					215				
CL1						92	116				215				
CLL												258			
CLO											202				
CLS											225				
CMdC		54													
CnF1											232				
CnF2											232				
CnFS		60													
COd		73													
COd2		73													
COF											202				
COL												259			
COP									153						
COr											202				
COS							104								
CP1											197				
CP2											197				
CrH3		51						131							
CrL3		51						131							
CrSt														291	
CrtF							115								
CSbY														291	
CSt		73												298	
Ctd						99						249			
Ctt							102								
CtU		53								155					
dA2											165				
dA3											166				
dAF											224				
dAL											224				
dAnF								134				260			
dAr											224				
dAS											220				
dbS											220				
dCCC											242				
dCCM											242				

Code															CUSTOMER SETTING
	[1.1 SPEED REFERENCE] (rEF-)	[1.2 MONITORING] (MOn-)	[FACTORY SETTINGS] (FCS-)	[Macro configuration] (CFG)	[SIMPLY START] (SIM-)	[SETTINGS] (SEt-)	[MOTOR CONTROL] (drC-)	[INPUTS / OUTPUTS CFG] (I_O-)	[COMMAND] (CtL-)	[FUNCTION BLOCKS] (FbM-)	[APPLICATION FUNCT.] (FUn-)	[FAULT MANAGEMENT] (FLt-)	[COMMUNICATION] (COM-)	[3 INTERFACE] (ItF-)	
dCC1		64													
dCC2		65													
dCC3		65													
dCC4		65													
dCC5		65													
dCC6		65													
dCC7		65													
dCC8		65													
dCF						91					170	270			
dCI											171				
dE2						87					168 184				
dEC					85	87					167				
dLb												264			
dLd												264			
dLr		73												298	
dO1								138							
dO1d								138							
dO1H								138							
dO1S								138							
dP1		62													
dP2		65													
dP3		65													
dP4		65													
dP5		65													
dP6		65													
dP7		65													
dP8		65													
drC1		64													
drC2		64													
drC3		64													
drC4		64													
drC5		64													
drC6		64													
drC7		64													
drC8		64													
dSF											225				
dS1											184				
dSP											184				
dtF											240				
EbO											239				
EPL												256			
EnU								132							

Code															CUSTOMER SETTING
	[1.1 SPEED REFERENCE] (rEF-)	[1.2 MONITORING] (MOn-)	[FACTORY SETTINGS] (FCS-)	[Macro configuration] (CFG)	[SIMPLY START] (SIM-)	[SETTINGS] (SEt-)	[MOTOR CONTROL] (drC-)	[INPUTS / OUTPUTS CFG] (I_O-)	[COMMAND] (CtL-)	[FUNCTION BLOCKS] (FbM-)	[APPLICATION FUNCT.] (FUn-)	[FAULT MANAGEMENT] (FLt-)	[COMMUNICATION] (COM-)	[3 INTERFACE] (ItF-)	
EnS								132							
ErCO													274		
EtF												255			
F1							115								
F2							115								
F2d							99								
F3							116								
F4							116								
F5							116								
FAb							117								
FAd1														284	
FAd2														284	
FAd3														284	
FAd4														284	
FAnF								133				260			
FbCd										155					
FbdF										156					
FbFt		53								155					
FbrM										156					
FbSM										156					
FbSt		53								155					
FCS1			79												
Fdt												263			
FFH							115								
FFM						101									
FFt						99					170				
FL1											186				
FLO													275		
FLOC													275		
FLOt													275		
FLr												250			
FLU						93	106				186				
Fn1									154						
Fn2									154						
Fn3									154						
Fn4									154						
FP1											209				
F9A												263			
F9C												263			
F9F												263			
F9L						99						250			
F9S		48													

Code	[1.1 SPEED REFERENCE] (rEF-)	[1.2 MONITORING] (MOn-)	[FACTORY SETTINGS] (FCS-)	[Macro configuration] (CFG)	[SIMPLY START] (SIM-)	[SETTINGS] (SEt-)	[MOTOR CONTROL] (drC-)	[INPUTS / OUTPUTS CFG] (I_O-)	[COMMAND] (CtL-)	[FUNCTION BLOCKS] (FbM-)	[APPLICATION FUNCT.] (FUn-)	[FAULT MANAGEMENT] (FLt-)	[COMMUNICATION] (COM-)	[3 INTERFACE] (ItF-)	CUSTOMER SETTING
F9t												263			
Fr1									151						
Fr1b											164				
Fr2									152						
FrH	48	48 54													
Fr1							113								
Fr5					84		104								
Fr55							113								
Frt											168				
FSt											170				
Ftd						99						249			
FtO						100						269			
FtU						100						268			
FtY			79												
GFS			79												
GSP														287	
HF1							113								
Hir							113								
HrFC												248			
HSO											202				
HSP					85	87					241				
HSP2						88					241				
HSP3						88					241				
HSP4						88					241				
I2tA											216				
I2tM		49													
I2t1											216				
I2tt											216				
IAO1										157					
IAO2										157					
IAO3										157					
IAO4										157					
IAO5										157					
IAO6										157					
IAO7										157					
IAO8										157					
IAO9										157					
IA10										157					
IAd1														284	
IAd2														284	
IAd3														284	
IAd4														284	

Code															CUSTOMER SETTING
	[1.1 SPEED REFERENCE] (rEF-)	[1.2 MONITORING] (MOn-)	[FACTORY SETTINGS] (FCS-)	[Macro configuration] (CFG)	[SIMPLY START] (SIM-)	[SETTINGS] (SEt-)	[MOTOR CONTROL] (drC-)	[INPUTS / OUTPUTS CFG] (I_O-)	[COMMAND] (CtL-)	[FUNCTION BLOCKS] (FbM-)	[APPLICATION FUNCT.] (FUn-)	[FAULT MANAGEMENT] (FLt-)	[COMMUNICATION] (COM-)	[3 INTERFACE] (ItF-)	
Ibr						98					191				
IbrA											197				
IdA							108								
IdC						91					171	270			
IdC2						91					172	270			
ILO1										156					
ILO2										156					
ILO3										156					
ILO4										156					
ILO5										156					
ILO6										156					
ILO7										156					
ILO8										156					
ILO9										156					
IL10										156					
ILr							113								
InH												258			
Inr						87					167				
IntP											213				
IPL					84						242	253			
Ird						98					191				
ItH					85	88									
JdC						98					193				
JF2						100					180				
JF3						100					180				
JFH						100					180				
JGF						93					175				
JGt						93					176				
JOG											175				
JPF						100					179				
L1A		49						124							
L1d								125							
L2A		49						125							
L2d								125							
L3A		49						124							
L3d								125							
L4A		49						125							
L4d								125							
L5A		49						124							
L5d								125							
L6A		49						125							
L6d								125							

Code															CUSTOMER SETTING
	[1.1 SPEED REFERENCE] (rEF-)	[1.2 MONITORING] (MOn-)	[FACTORY SETTINGS] (FCS-)	[Macro configuration] (CFG)	[SIMPLY START] (SIM-)	[SETTINGS] (SEt-)	[MOTOR CONTROL] (drC-)	[INPUTS / OUTPUTS CFG] (I_O-)	[COMMAND] (CtL-)	[FUNCTION BLOCKS] (FbM-)	[APPLICATION FUNCT.] (FUn-)	[FAULT MANAGEMENT] (FLt-)	[COMMUNICATION] (COM-)	[3 INTERFACE] (ItF-)	
LA01										157					
LA02										157					
LA03										157					
LA04										157					
LA05										157					
LA06										157					
LA07										157					
LA08										157					
LA1A		49						125							
LA1d								125							
LA2A		49						125							
LA2d								125							
LAnF								133				260			
LAC														278	
LbA							119								
LbC						101	119								
LbC1							121								
LbC2							121								
LbC3							121								
LbF							121								
LC2											215				
LCr		48													
LCt											218				
LdS							113								
LES											218				
LEt												255			
LFA							108								
LFF												269			
LFL3												257			
LFr	44	48													
LFr1		57													
LFr2		57													
LFr3		57													
LIS1		49													
LIS2		49													
LLC											218				
LnG														280	
LO1									136						
LO1d									137						
LO1H									137						
LO1S									137						
LOC						100						269			

Code															CUSTOMER SETTING
	[1.1 SPEED REFERENCE] (rEF-)	[1.2 MONITORING] (MOn-)	[FACTORY SETTINGS] (FCS-)	[Macro configuration] (CFG)	[SIMPLY START] (SIM-)	[SETTINGS] (SEt-)	[MOTOR CONTROL] (drC-)	[INPUTS / OUTPUTS CFG] (I_O-)	[COMMAND] (CtL-)	[FUNCTION BLOCKS] (FbM-)	[APPLICATION FUNCT.] (FUn-)	[FAULT MANAGEMENT] (FLt-)	[COMMUNICATION] (COM-)	[3 INTERFACE] (ItF-)	
LP1											197				
LP2											197				
LFS							113								
LSP					85	87									
LUL						100						267			
LUn						100						267			
M001										158					
M002										158					
M003										158					
M004										158					
M005										158					
M006										158					
M007										158					
M008										158					
MICt		56													
MIEC		56													
M3Ct		56													
M3EC		56													
MStP											225				
MA2												166			
MA3												166			
MCr							113								
Mdt														283	
MFr	44	48				95									
MMF		48													
MPC							107								
MtM												252			
nbrP		59													
nbtP		59													
nC1		57													
nC2		57													
nC3		57													
nC4		57													
nC5		57													
nC6		57													
nC7		57													
nC8		57													
nCA1													273		
nCA2													273		
nCA3													273		
nCA4													273		
nCA5													273		

Code	[1.1 SPEED REFERENCE] (rEF-)	[1.2 MONITORING] (MOn-)	[FACTORY SETTINGS] (FCS-)	[Macro configuration] (CFG)	[SIMPLY START] (SIM-)	[SETTINGS] (SEt-)	[MOTOR CONTROL] (drC-)	[INPUTS / OUTPUTS CFG] (I_O-)	[COMMAND] (CtL-)	[FUNCTION BLOCKS] (FbM-)	[APPLICATION FUNCT.] (FUn-)	[FAULT MANAGEMENT] (FLt-)	[COMMUNICATION] (COM-)	[3 INTERFACE] (ItF-)	CUSTOMER SETTING
nCA6													273		
nCA7													273		
nCA8													273		
nCr					84		104								
nCrS							110								
nLS											225				
nM1		56													
nM2		56													
nM3		56													
nM4		56													
nM5		56													
nM6		56													
nM7		56													
nM8		56													
nMA1													272		
nMA2													272		
nMA3													272		
nMA4													272		
nMA5													272		
nMA6													272		
nMA7													272		
nMA8													272		
nMtS		59													
nPr					84		104								
nrd							117								
nSP					84		104								
nSPS							110								
nSt											170				
ntJ		72													
OCC											220				
OdL												269			
Odt												253			
OHL												254			
OLL												252			
OPL												253			
OPr		48													
OSP											202				
Otr		48													
PAH						96					209				
PAL						96					208				
PAS											225				
PAU											209				

Code															CUSTOMER SETTING
	[1.1 SPEED REFERENCE] (rEF-)	[1.2 MONITORING] (MOn-)	[FACTORY SETTINGS] (FCS-)	[Macro configuration] (CFG)	[SIMPLY START] (SIM-)	[SETTINGS] (SEt-)	[MOTOR CONTROL] (drC-)	[INPUTS / OUTPUTS CFG] (I_O-)	[COMMAND] (CtL-)	[FUNCTION BLOCKS] (FbM-)	[APPLICATION FUNCT.] (FUn-)	[FAULT MANAGEMENT] (FLt-)	[COMMUNICATION] (COM-)	[3 INTERFACE] (ItF-)	
PCd														290	
PEr						96					209				
PES											197				
PFI		52						125							
PFr		52						125							
PGI								132							
PHS							113								
PIA		52						125							
PIC											208				
PIF											207				
PIF1											207				
PIF2											207				
PII											207				
PIL		52						125							
PIM											210				
PIP1											207				
PIP2											207				
PIS											209				
POH						96					208				
POL						96					208				
PPI												266			
PPnS							110								
Pr2											211				
Pr4											211				
PrSt											225				
PrP						96					208				
PS16											178				
PS2											178				
PS4											178				
PS8											178				
PSr						96					209				
PSt									151						
PtCL												247			
PtH		60													
PUIS														290	
qSH						99					239				
qSL						99					239				
rI								135							
rId								135							
rIF								136							
r2F								136							
rIH								136							

Code															CUSTOMER SETTING
	[1.1 SPEED REFERENCE] (rEF-)	[1.2 MONITORING] (MOn-)	[FACTORY SETTINGS] (FCS-)	[Macro configuration] (CFG)	[SIMPLY START] (SIM-)	[SETTINGS] (SEt-)	[MOTOR CONTROL] (drC-)	[INPUTS / OUTPUTS CFG] (I_O-)	[COMMAND] (CtL-)	[FUNCTION BLOCKS] (FbM-)	[APPLICATION FUNCT.] (FUn-)	[FAULT MANAGEMENT] (FLt-)	[COMMUNICATION] (COM-)	[3 INTERFACE] (ItF-)	
rIS								135							
r2								136							
r2d								136							
r2H								136							
r2S								136							
rCA											220				
rCb											164				
rdAE							114								
rdG						96					208				
rECI		59													
rFC									152						
rFCC		54													
rFLt		72													
rFr		48													
rIG						96					208				
rIn									151						
rMUd						100						267			
rP												248			
rPI1		57													
rPI2		58													
rPI3		58													
rPI4		58													
rP2						96					211				
rP21		58													
rP22		58													
rP23		58													
rP24		58													
rP3						97					211				
rP31		59													
rP32		59													
rP33		59													
rP34		59													
rP4						97					211				
rPA												248			
rPC	44	60													
rPE		60													
rPF		60													
rPG						96					208				
rPI	44	60									208				
rPO		60													
rPr		60													
rPS											168				

Code															CUSTOMER SETTING
	[1.1 SPEED REFERENCE] (rEF-)	[1.2 MONITORING] (MOn-)	[FACTORY SETTINGS] (FCS-)	[Macro configuration] (CFG)	[SIMPLY START] (SIM-)	[SETTINGS] (SEt-)	[MOTOR CONTROL] (drC-)	[INPUTS / OUTPUTS CFG] (I_O-)	[COMMAND] (CtL-)	[FUNCTION BLOCKS] (FbM-)	[APPLICATION FUNCT.] (FUn-)	[FAULT MANAGEMENT] (FLt-)	[COMMUNICATION] (COM-)	[3 INTERFACE] (ItF-)	
rPt											167				
rrS								123							
rSA							108								
rSAS							113								
rSd											202				
rSF												247			
rSL											210				
rStL											202				
rtH		60													
rtr											240				
rUn								123							
SI01											227				
SI02											227				
SI03											227				
SI04											227				
SI05											227				
SI06											227				
SI07											227				
SI08											227				
SI09											227				
SI10											227				
SI11											227				
SI12											227				
SI13											227				
SI14											227				
SI15											227				
S201											227				
S202											227				
S203											227				
S204											227				
S205											227				
S206											227				
S207											227				
S208											227				
S209											227				
S210											227				
S211											227				
S212											227				
S213											227				
S214											227				
S215											227				
S301											228				

Code															CUSTOMER SETTING
	[1.1 SPEED REFERENCE] (rEF-)	[1.2 MONITORING] (MOn-)	[FACTORY SETTINGS] (FCS-)	[Macro configuration] (CFG)	[SIMPLY START] (SIM-)	[SETTINGS] (SEt-)	[MOTOR CONTROL] (drC-)	[INPUTS / OUTPUTS CFG] (I_O-)	[COMMAND] (CtL-)	[FUNCTION BLOCKS] (FbM-)	[APPLICATION FUNCT.] (FUn-)	[FAULT MANAGEMENT] (FLt-)	[COMMUNICATION] (COM-)	[3 INTERFACE] (ItF-)	
5302											228				
5303											228				
5304											228				
5305											228				
5306											228				
5307											228				
5308											228				
5309											228				
5310											228				
5311											228				
5312											228				
5313											228				
5314											228				
5315											228				
5A2											165				
5A3											165				
5AF1		67													
5AF2		68													
5AL											224				
5Ar											224				
5At												255			
5CL											202				
5CL3											243				
5CS1			79												
5dC1						91					173 192				
5dC2						92					174				
5dd												260			
5dS						101									
5F00		68													
5F01		68													
5F02		69													
5F03		69													
5F04		69													
5F05		70													
5F06		70													
5F07		70													
5F08		71													
5F09		71													
5F10		71													
5F11		72													
5FC						88	115								
5Fd											225				

Code															CUSTOMER SETTING
	[1.1 SPEED REFERENCE] (rEF-)	[1.2 MONITORING] (MOn-)	[FACTORY SETTINGS] (FCS-)	[Macro configuration] (CFG)	[SIMPLY START] (SIM-)	[SETTINGS] (SEt-)	[MOTOR CONTROL] (drC-)	[INPUTS / OUTPUTS CFG] (I_O-)	[COMMAND] (CtL-)	[FUNCTION BLOCKS] (FbM-)	[APPLICATION FUNCT.] (FUn-)	[FAULT MANAGEMENT] (FLt-)	[COMMUNICATION] (COM-)	[3 INTERFACE] (ItF-)	
SFFE		53 67													
SFr						92	116								
SFt							116								
SH2											241				
SH4											241				
SIr							114								
SIt						88	115								
SLL												259			
SLP						88	115								
SLSS		52													
SMOt							111								
SnC											240				
SOP							117								
SP10						94					179				
SP11						94					179				
SP12						94					179				
SP13						95					179				
SP14						95					179				
SP15						95					179				
SP16						95					179				
SP2						94					178				
SP3						94					178				
SP4						94					178				
SP5						94					178				
SP6						94					178				
SP7						94					178				
SP8						94					179				
SP9						94					179				
SPb							113								
SPd1		61													
SPd2		61													
SPd3		61													
SPF							113								
SPG						88	115								
SPGU						88	115								
SPM											185				
Sr11		62													
Sr12 to Sr18		65													
Sr21		62													

Code															CUSTOMER SETTING
	[1.1 SPEED REFERENCE] (rEF-)	[1.2 MONITORING] (MOn-)	[FACTORY SETTINGS] (FCS-)	[Macro configuration] (CFG)	[SIMPLY START] (SIM-)	[SETTINGS] (SEt-)	[MOTOR CONTROL] (drC-)	[INPUTS / OUTPUTS CFG] (I_O-)	[COMMAND] (CtL-)	[FUNCTION BLOCKS] (FbM-)	[APPLICATION FUNCT.] (FUn-)	[FAULT MANAGEMENT] (FLt-)	[COMMUNICATION] (COM-)	[3 INTERFACE] (ItF-)	
Sr22 to Sr28		65													
SrA1		62													
SrA2 to SrA8		65													
Srb1		62													
Srb2 to Srb8		65													
SrC1		62													
SrC2 to SrC8		65													
Srd1		62													
Srd2 to Srd8		65													
SrE1		62													
SrE2 to SrE8		65													
SrF1		62													
SrF2 to SrF8		65													
SrG1		62													
SrG2 to SrG8		65													
SrH1		62													
SrH2 to SrH8		65													
Sr11		62													
Sr12 to Sr18		65													
SrJ1		62													
SrJ2 to SrJ8		65													
Sr?1		62													
Sr?2 to Sr?8		65													
SrL1		62													

Code															CUSTOMER SETTING
	[1.1 SPEED REFERENCE] (rEF-)	[1.2 MONITORING] (MOn-)	[FACTORY SETTINGS] (FCS-)	[Macro configuration] (CFG)	[SIMPLY START] (SIM-)	[SETTINGS] (SEt-)	[MOTOR CONTROL] (drC-)	[INPUTS / OUTPUTS CFG] (I_O-)	[COMMAND] (CtL-)	[FUNCTION BLOCKS] (FbM-)	[APPLICATION FUNCT.] (FUn-)	[FAULT MANAGEMENT] (FLt-)	[COMMUNICATION] (COM-)	[3 INTERFACE] (ItF-)	
SrL2 to SrL8		65													
Srb						100						267 269			
SrP						95					184				
SSIS		52													
SSb												261			
Std											225				
StFr		48													
StM												257			
StO												261			
StOS		52													
StP												256			
Str											182				
Strt												257			
Stt											170				
StUn					85		105 111								
SUL							117								
tA1						87					167				
tA2						87					168				
tA3						87					168				
tA4						87					168				
tAA											213				
tAC		72													
tAC2		72													
tAnF								133				260			
tAr												249			
tbE						98					192				
tbO											239				
tbr													273		
tbS												257			
tCC					83			122							
tCt								122							
tdC						91					172	271			
tdC1						91					173				
tdC2						92					174				
td1						91					171	270			
tdn											239				
tdS												263			
tEC1		59													
tFO													273		

Code															CUSTOMER SETTING
	[1.1 SPEED REFERENCE] (rEF-)	[1.2 MONITORING] (MOn-)	[FACTORY SETTINGS] (FCS-)	[Macro configuration] (CFG)	[SIMPLY START] (SIM-)	[SETTINGS] (SEt-)	[MOTOR CONTROL] (drC-)	[INPUTS / OUTPUTS CFG] (I_O-)	[COMMAND] (CtL-)	[FUNCTION BLOCKS] (FbM-)	[APPLICATION FUNCT.] (FUn-)	[FAULT MANAGEMENT] (FLt-)	[COMMUNICATION] (COM-)	[3 INTERFACE] (ItF-)	
tFr					85			102							
tHA												254 255			
tHd		48													
tHr		48													
tHt												252			
tLA											213				
tLC											214				
tLd												264			
tL IG						99					213				
tL IM						99					213				
tLS						93					210				
tnL												265			
tOL												269			
tOS											202				
tP11		58													
tP12		58													
tP13		58													
tP14		58													
tP21		58													
tP22		58													
tP23		58													
tP24		58													
tP31		59													
tP32		59													
tP33		59													
tP34		59													
tqb												263			
tqS							110								
trA							108								
trC											239				
trH						99					239				
trL						99					239				
tSM												256			
tSY											240				
ttd						100						252 255			
ttd2												252 255			
ttd3												252 255			
ttH						99						249			
ttL						99						249			

Code															CUSTOMER SETTING
	[1.1 SPEED REFERENCE] (rEF-)	[1.2 MONITORING] (MOn-)	[FACTORY SETTINGS] (FCS-)	[Macro configuration] (CFG)	[SIMPLY START] (SIM-)	[SETTINGS] (SEt-)	[MOTOR CONTROL] (drC-)	[INPUTS / OUTPUTS CFG] (I_O-)	[COMMAND] (CtL-)	[FUNCTION BLOCKS] (FbM-)	[APPLICATION FUNCT.] (FUn-)	[FAULT MANAGEMENT] (FLt-)	[COMMUNICATION] (COM-)	[3 INTERFACE] (ItF-)	
ttO												273			
ttr						98				193					
tUL										233					
tUn					85		105 110								
tUnU							106 111								
tUP										239					
tUS					85		105 111								
U1							115								
U2							115								
U3							116								
U4							116								
U5							116								
Ubr											244		119		
UdL												268			
UFr						88	115								
UIH1		50						130							
UIH2		50						131							
UIL1		50						130							
UIL2		50						130							
ULn		48													
ULr		73													
ULt												267			
UnS					84		104								
UOH1		51						141							
UOL1		51						141							
UOP		48													
UPL												256			
UrES											243	256			
USb												256			
USI											184				
USL											244	256			
USP											182				
USt												256			