Variable speed drives

Altivar Easy 610

For applications from 0.75 to 160 kW / 1 to 216 HP

Catalog

June 2015

CÔNG TY CỔ PHẦN THIẾT BỊ ĐIỆN HOÀNG PHƯƠNG
ĐC: Số 10, ngõ 44, phố Võ Thị Sáu, P.Thanh Nhàn, Q.Hai Bà Trưng, TP. Hà Nội
MST: 0106798886
Tel: 024.3215.1322
Website: Hoangphuong.com.vn

Schneider Electric

Contents

Altivar Easy 610 variable speed drives

■ **Variable speed drives**

□ Presentation ..... *page 2*

□ Normal duty and Heavy duty operating modes ..... *page 4*

□ Integrated parts ..... *page 4*

□ Configuration and runtime tools ..... *page 5*

□ Accessories and options ..... *page 5*

□ References ..... *page 6*

■ **Configuration and runtime tools**

□ Plain text display terminal ..... *page 8*

□ Mounting kit for plain text display terminal ..... *page 9*

□ Remote graphic display terminal (option) ..... *page 10*

□ Mounting kit for remote graphic display terminal ..... *page 11*

■ **Options**

□ I/O modules ..... *page 12*

□ Integrated ports and communication module ..... *page 12*

□ dv/dt filters ..... *page 14*

■ **Motor starters** ..... *page 15*

■ **Coordination table between drives and fuses** ..... *page 16*

■ **Dimensions** ..... *page 17*

■ **Product reference index** ..... *page 18*

Variable speed drives
Altivar™ Easy 610

Water & wastewater

Oil & gas

Circulating pumps for building management

Introduction to the offer: applications

The Altivar™ Easy 610 drive is an IP 20 frequency inverter for three-phase asynchronous motors, specially designed for standard applications in the following market segments and domains:

- Market segments

Water & wastewater

Oil & gas

- Domains

Process & machine management

Building management

Typical applications in the market segments

Water & wastewater

- Intake pump
- Booster pump
- Lifting pump
- Aeration blower

Oil & Gas

- Circulating pump
- Drain pump
- Oil transfer pump

Pump and fan applications in the domains

Process & machine management

- Air cooling system fan
- Circulating pump
- Cooling fan
- Draught fan
- Compressor
- Conveyor

Building management

- Fan
- Circulating pump

Drives: page 6
Configuration and runtime tools: page 8
Options: page 12
Motor starters: page 15
Dimensions: page 17

Schneider Electric

ATV610U07N4…ATV610U75N4
ATV610D11N4…ATV610D15N4

ATV610D18N4…ATV610D22N4,
ATV610D30N4…ATV610D45N4,

ATV610D55N4…ATV610D90N4
ATV610C11N4…ATV610C16N4

Presentation of the offer

The Altivar Easy 610 offer covers motor power ratings from 0.75 to 160 kW/*1.04 to 222 HP* for three-phase voltages between 380 and 415 V.

Altivar Easy 610 drives can help improve equipment performance and reduce operating costs by optimizing energy consumption and user comfort.

A communication module is available for seamless integration into the main automation architectures.
Altivar Easy 610 drives feature various configurable I/O as standard to facilitate adaptation to specific applications.
They offer a plug & play solution, whereby parameters are preset in the factory to the desired configuration, to help save process control and operating time.

Rugged

Altivar Easy 610 drives are robust products designed to adapt to various levels of thermal stress and to harsh environments.
- ■ Operating temperature (for continuous monitoring)
- □ Mounting in enclosure: mounted singly or side-by-side: -15...+60 °C/*+5...+140 °F*, 45...60 °C/*113...140 °F* with derating
- ■ Storage and transport temperature: -40...+70 °C /*-104...+158 °F*
- ■ Operating altitude:
- □ 0...1,000 m without derating
- □ 1,000...4,800 m with derating of 1% per 100 m/*328.08 ft*
- □ chemical class 3C3 conforming to IEC/EN 60721
- □ mechanical class 3S3 conforming to IEC/EN 60721
- □ electronic cards with protective coating
- ■ Protection to suit requirements:
- □ IP 20 for mounting in enclosure
- □ IP 40 on the top of the product
- □ IP 65 for remote graphic display terminal

Environment

Altivar Easy 610 drives have been designed to meet the requirements of environmental protection directives and regulations:
- ■ RoHS 2 *(1)*
- ■ REACH *(2)* + Substitute It Now solution (halogen-free wiring and plastics)
- ■ PEP (Product Environmental Profile) eco-passport program for reducing the carbon footprint and conserving raw materials
- ■ EoLI (End of Life Instruction) *(3)*
- □ more than 70% recyclable materials (new ruling)
- ■ Efficient energy management: 30% reduction in consumption

Electromagnetic compatibility (EMC)

Compliance with electromagnetic compatibility requirements has been incorporated into the design of the drive, which simplifies installation and provides an economical means of helping to ensure equipment meets CE marking requirements.
Altivar Easy 610 drives have a category C3 EMC filter (see page 4).

Installation and maintenance

Altivar Easy 610 drives are ergonomically designed to adapt to any type of installation:
- ■ Products, systems, or integrated in iMCC
- ■ IP 20
- ■ Easy installation of products and systems:
- □ cable entry equipped with Romex cable glands to maintain an EMC connection for the power and control cable
- □ color code for connections to the display terminal and control terminals
- ■ Asynchronous drive in open loop for 0.1...500 Hz output frequency
- ■ Lower maintenance costs:
- □ fans can be replaced in less than 5 minutes
- □ no maintenance tool required
- □ limited number of parts

(1) European directive 2002/95/EC Restriction Of Hazardous Substances (applicable in 2016)
(2) European regulation No. 1907/2006
(3) According to IEC 62635 Guidelines

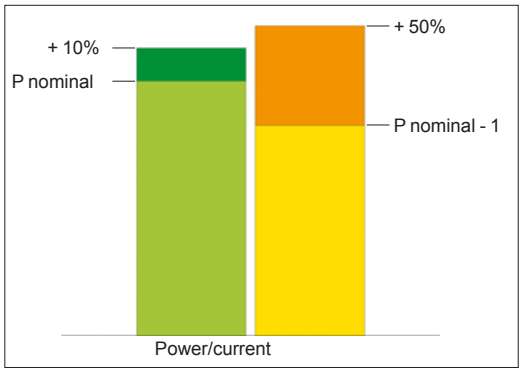

Normal duty and Heavy duty modes

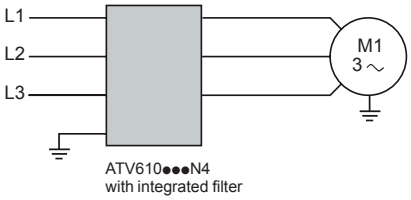

Altivar Easy 610 drive with integrated EMC filter

Normal duty and Heavy duty operating modes

The Altivar Easy 610 offer covers motor power ratings from 0.75...160 kW/*1...216 HP* for three-phase voltages between 380 and 415 V.

Three-phase power supply	Motor power	Degree of protection	Reference
380...415 V	0.75 kW...160 kW *1...216 HP*	IP 20	**ATV610U07N4... C16N4**

Altivar Easy 610 variable speed drives are designed for use in two operating modes that can optimize the drive nominal rating according to the system constraints.

These two modes are:
- Normal duty (ND): Dedicated mode for applications requiring a slight overload (up to 110% for 60 s or 120% for 20 s) with a motor power no higher than the drive nominal power
- Heavy duty (HD): Dedicated mode for applications requiring a significant overload (up to 150% for 60 s) with a motor power no higher than the drive nominal power derated by one rating

These 2 operating modes make the Altivar Easy 610 range suitable for use in variable and constant torque applications, such as pump, fan, compressor, and conveyor.

Integration

Integrated DC chokes

Above 4 kW/*5 HP*, Altivar Easy 610 variable speed drives are supplied with an integrated DC choke to reduce harmonic distortion.

Integrated EMC filters

Altivar Easy 610 drives have integrated radio interference input filters in accordance with the EMC standard for variable speed electrical power drive "products" IEC/EN 61800-3, edition 2, category C3 in environment 1 or 2, and to comply with the European EMC (electromagnetic compatibility) directive.

Maximum length of shielded cable *(1)* according to IEC/EN 61800-3, category C3: 50 m/164.04 ft (for all ratings).

The integrated EMC filter creates leakage current to ground. It is possible to reduce the leakage current by removing the capacitors of the filters (see the diagrams on our website or refer to the Installation Manual). In this configuration, the product does not meet the EMC requirements according to standard IEC 61800-3.

Communication protocol

The Modbus serial link allows the connection of configuration and runtime tools via 2 integrated ports.

(1) Values given depend on the nominal switching frequency of the drive. This frequency depends on the drive rating. If motors are connected in parallel, it is the total length of all cables that should be taken into account.

Configuration and runtime tools

2 types of display terminal are available:
- ■ Plain text display terminal (see page 8):
  - □ drive control, adjustment, and configuration
  - □ display of current values (motor, I/O, etc.)
  - □ configuration storage and download
  - □ duplication of one drive configuration on another drive
  - □ remote use by means of appropriate accessories (see page 9)
  - □ read/write values
- ■ Remote graphic display terminal (see page 10):

Same functions as for plain text display terminal with the addition of:
- □ display of bar charts, gauges, and trend charts
- □ 23 integrated languages
- □ IP 65 protection
- □ real-time clock

Accessories and options

Altivar Easy 610 drives are designed to take complementary accessories and options to increase their functionality.

Accessories

- ■ Drive
  - □ plate for EMC mounting (see page 7)
- ■ Plain text display terminal and remote graphic display terminal:
  - □ kit for mounting on enclosure door (see page 9 and 11)

Options

- ■ Modules:
  - □ I/O option modules (see page 12):
    - 2 analog inputs
    - 6 digital inputs
    - 2 digital outputs
  - □ relay output module (see page 12)
    - 3 NO contacts
  - □ communication module (see page 13):
    - Profibus DP V1 bus
- ■ Output filters:
  - □ dv/dt filters (see page 14)

Motor starters

Schneider Electric offers combinations of circuit breakers and contactors to be able to use Altivar Easy 610 drives in optimum conditions (see page 15).

Variable speed drives

Altivar Easy 610

Supply voltage 380…415 V 50/60Hz

PF142200

ATV610U07N4

PF142209

ATV610D18N4

PF142217

ATV610C11N4

IP 20 three-phase 380...415 V drives with integrated category C3 EMC filter

Motor			Power part supply				Altivar Easy 610			
Nominal power indicated on rating plate (1)			Max. input current (2)		Apparent power	Max. prospective line Isc	Maximum continuous current (1)	Maximum transient current for 60 s	Reference	Weight
			380 V	415 V	415 V					
ND: Normal duty (3)										
HD: Heavy duty (4)										
	kW	HP	A	A	kVA	kA	A	A		kg/lb
ND	0.75	1	3.1	2.9	2.1	5	2.2	2.4	ATV610U07N4	2.400/5.291
HD	0.37	0.5	1.7	1.5	1.1	5	1.5	2.3		
ND	1.5	2	5.7	5.3	3.8	5	4.0	4.4	ATV610U15N4	2.400/5.291
HD	0.75	1	3.1	2.8	2.0	5	2.2	3.3		
ND	2.2	3	7.8	7.1	5.1	5	5.6	6.2	ATV610U22N4	2.400/5.291
HD	1.5	2	5.6	5.1	3.7	5	4.0	6.0		
ND	3	4	10.1	9.2	6.6	5	7.2	7.9	ATV610U30N4	2.400/5.291
HD	2.2	3	7.6	7.0	5.0	5	5.6	8.4		
ND	4	5	8.8	8.5	6.1	5	9.3	10.2	ATV610U40N4	4.000/8.818
HD	3	–	7.2	6.7	4.8	5	7.2	10.8		
ND	5.5	7.5	11.6	11.0	7.9	22	12.7	14.0	ATV610U55N4	4.100/9.039
HD	4	5	8.9	8.6	6.2	22	9.3	14.0		
ND	7.5	10	14.7	13.7	9.9	22	15.8	17.4	ATV610U75N4	4.100/9.039
HD	5.5	7.5	11.3	10.7	7.7	22	12.7	19.1		
ND	11	15	22.0	20.7	14.9	22	23.5	25.9	ATV610D11N4	7.200/15.873
HD	7.5	10	16.4	15.7	11.3	22	16.5	24.8		
ND	15	20	29.4	27.7	19.9	22	31.7	34.9	ATV610D15N4	7.200/15.873
HD	11	15	23.0	21.9	15.7	22	23.5	35.3		
ND	18.5	25	37.2	35.2	25.3	22	39.2	43.1	ATV610D18N4	13.300/29.321
HD	15	20	31.6	30.3	21.8	22	31.7	47.6		
ND	22	30	41.9	39.0	28.0	22	46.3	50.9	ATV610D22N4	13.900/30.644
HD	18.5	25	36.0	33.8	24.3	22	39.2	58.8		
ND	30	40	62.5	59.7	42.9	22	61.5	67.7	ATV610D30N4	26.100/57.541
HD	22	30	49.7	46.3	33.3	22	46.3	69.5		
ND	37	50	76.6	72.9	52.4	22	74.5	82.0	ATV610D37N4	26.800/59.084
HD	30	40	65.8	61.8	44.4	22	59.6	89.4		
ND	45	60	92.9	88.3	63.5	22	88	97	ATV610D45N4	26.800/59.084
HD	37	50	80.5	75.8	54.5	22	74.5	112		
ND	55	75	111.5	105.6	75.9	22	106	117	ATV610D55N4	53.700/118.388
HD	45	60	95.9	91.2	65.6	22	88	132		
ND	75	100	147.9	139.0	99.9	22	145	160	ATV610D75N4	53.700/118.388
HD	55	75	115.8	110.0	79.1	22	106	159		
ND	90	125	177.8	168.5	121.1	50	173	190	ATV610D90N4	53.700/118.388
HD	75	100	155.8	149.1	107.2	50	145	218		
ND	110	149	201.0	165.0	118.6	50	211	232	ATV610C11N4	82.000/180.779
HD	90	125	170.0	160.0	115.0	50	173	260		
ND	132	178	237.0	213.0	153.1	50	250	275	ATV610C13N4	82.000/180.779
HD	110	149	201.0	188.0	135.1	50	211	317		
ND	160	216	284.0	261.0	187.6	50	302	332	ATV610C16N4	82.000/180.779
HD	132	178	237.0	224.0	161.0	50	250	375		

*(1) These values are given for a nominal switching frequency of 4 kHz up to **ATV610D45N4**, or 2.5 kHz for **ATV610D55N4...C16N4** for use in continuous operation.*
*The switching frequency is adjustable from 2…12 kHz up to **ATV610D45N4**, or from 1…8 kHz for **ATV610D55N4...C16N4**. Above 2.5 or 4 kHz (depending on the rating), the drive will automatically reduce the switching frequency in the event of an excessive temperature rise. For continuous operation above the nominal switching frequency, derate the nominal drive current (see the derating curves on our website).*

(2) Typical value for the indicated motor power and for the maximum prospective line Isc.

(3) Values given for applications requiring a slight overload (up to 110 % for 60 s or 120% for 20 s).

(4) Values given for applications requiring a slight overload (up to 150 % for 60 s).

Variable speed drives

Altivar Easy 610

Mounting accessories

VW3A47803

VW3A9704

Accessories for mounting of variable speed drives

Plates for EMC mounting of variable speed drives

For use with variable speed drives	Power		Reference
	kW	*HP*	
ATV610U07N4...U75N4	0.75...7.5	*1...10.1*	**VW3A47801**
ATV610D11N4, D15N4	11...15	*14.9...20.3*	**VW3A47802**
ATV610D18N4...D22N4	18.5...22	*25...30*	**VW3A47803**
ATV610D30N4…D45N4	30...45	*40...60*	**VW3A47804**
ATV610D55N4…D90N4	55...90	*75...125*	**VW3A47805**

Kit for IP 21 conformity

For use with variable speed drives	Power		Reference
	kW	*HP*	
ATV610C11N4…C16N4	110...160	*149...216*	**VW3A9704**

Plain text display terminal

Plain text display terminal

The plain text display terminal is supplied with the drive. It can also be ordered as a spare part.

This terminal can be:
- Connected and mounted on the front of the drive
- Connected and mounted on an enclosure door using a remote mounting accessory

This terminal is used to:
- Control, adjust, and configure the drive
- Display current values (motor, I/O, and process data)
- Store and download configurations (several configuration files can be stored in the memory)
- Duplicate the configuration of one powered-up drive on another powered-up drive

Other features:
- 2 lines
- Languages (Chinese, English, French, German, Italian, Spanish)
- White backlight
- Operating range: -15...50 °C/*+5...122 °F*
- IP 21 protection
- Removable, easy access with RJ45 port

Description

The front of the display terminal comprises:
1 LCD backlight screen
2 “OK” button: saves the current value (ENT)
3 “RUN” button: local control of motor run command
4 “STOP/RESET” button: local control of motor stop command/clearing detected faults
5 “ESC” button: aborts a value, parameter, or menu to return to the previous selection
6 Home: root menu
7 Turn ±: increases or decreases the value, goes to the next or previous line

References

Description	Reference	Weight kg/ *lb*
Plain text display terminal	**VW3A1113**	0.200/ *0.441*

PF142222

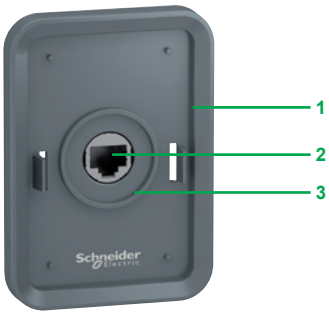

Remote mounting kit for mounting plain text display terminal on enclosure door (front panel)

PF142251

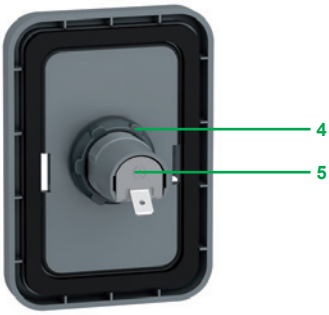

Remote mounting kit for mounting plain text display terminal on enclosure door (rear panel)

Mounting kit for plain text display terminal

■ Remote mounting kit for mounting on an enclosure door with IP 43 degree of protection as standard

Description

The kit comprises:
- Tightening tool (also sold separately under the reference ZB5AZ905)

1 Mounting plate
2 RJ45 port for the plain text display terminal
3 Seal
4 Fixing nut
5 RJ45 port for connecting the remote-mounting cordset

Cordsets must be ordered separately depending on the length required.
Drilling a hole with a standard Ø 22 tool, as used for a pushbutton, allows the unit to be mounted without needing a cut-out in the enclosure (Ø 22.5 mm/*Ø 0.89 in.* drill hole).

An anti-rotation function is provided and operates as follows: when the kit is locked on the panel tightly by the nut, the gasket on the back cannot rotate.

References

Description	Length m/ *ft*	IP degree of protection	Reference	Weight kg/ *lb*
Remote mounting kit Order with remote-mounting cordset VW3A1104R●●●	–	43	**VW3A1114**	–
Tightening tool for remote mounting kit	–	–	**ZB5AZ905**	0.016/ *0.035*
Remote-mounting cordset equipped with 2 RJ45 connectors	1/ *3.28*	–	**VW3A1104R10**	0.050/ *0.110*
	3/ *9.84*	–	**VW3A1104R30**	0.150/ *0.331*
	5/ *16.40*	–	**VW3A1104R50**	0.250/ *0.551*
	10/ *32.81*	–	**VW3A1104R100**	0.500/ *1.102*

Variable speed drives

Altivar Easy 610

Option: Configuration and runtime tools

Remote graphic display terminal
(Detected fault: the screen's red backlight is activated automatically)

Remote graphic display terminal (option)

This terminal can be:
- Connected and mounted on the front of the drive
- Connected and mounted on an enclosure door using a remote mounting accessory

This terminal is used to:
- Control, adjust, and configure the drive
- Display current values (motor, I/O, and process data)
- Duplicate the configuration of one powered-up drive on another powered-up drive

Other characteristics:
- 8 lines, 240 x 160 pixels
- Displays bar charts, gauges, and trend charts
- 23 integrated languages (complete alphabets) covering the majority of countries around the world (other languages can be added; please consult our website www.schneider-electric.com)
- 2-color backlit display (white and red); if an error is detected, the red backlight is activated automatically (function can be disabled)
- Operating range: -15...50 °C/*+5...122 °F*
- IP 65 protection
- Real-time clock with backup battery for providing data acquisition and event timestamping functions even when the drive is stopped

Remote graphic display terminal

Description

The front of the display terminal comprises:
1. LCD backlight screen
2. "OK" button: saves the current value (ENT)
3. "RUN" button: local control of motor run command
4. "STOP/RESET" button: local control of motor stop command/clearing detected faults
5. "ESC" button: aborts a value, parameter, or menu to return to the previous selection
6. Home: root menu
7. Turn ±: increases or decreases the value, goes to the next or previous line
8. Information (*i*): contextual help
9. 4 function keys to facilitate navigation and provide contextual links for enabling functions

References

Description	Reference *(1)*	Weight kg/ *lb*
Remote graphic display terminal	**VW3A1111**	0.200/ *0.441*

(1) Available: Q4 2015.

PF130903

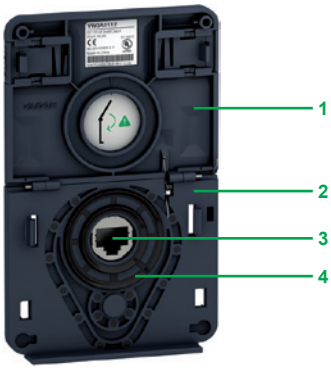

Remote mounting kit for mounting graphic display terminal on enclosure door (front panel)

PF140362

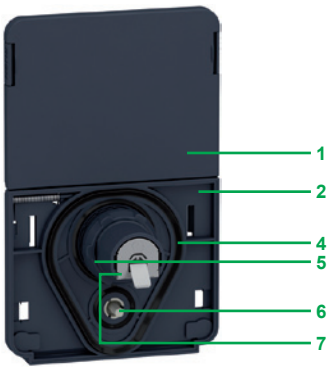

Remote mounting kit for graphic display terminal (rear panel)

Mounting kit for remote graphic display terminal

■ Remote mounting kit for mounting on an enclosure door with IP 65 degree of protection as standard

Description

The kit comprises:
- Tightening tool (also sold separately under the reference ZB5AZ905)

1 Cover plate to maintain IP 65 protection when there is no terminal connected
2 Mounting plate
3 RJ45 port for the graphic display terminal
4 Seal
5 Fixing nut
6 Anti-rotation pin
7 RJ45 port for connecting the remote-mounting cordset

Cordsets must be ordered separately depending on the length required.
Drilling a hole with a standard Ø 22 tool, as used for a pushbutton, allows the unit to be mounted without needing a cut-out in the enclosure (Ø 22.5 mm/*Ø 0.89 in.* drill hole).

References

Description	Length m/ *ft*	IP degree of protection	Reference	Weight kg/ *lb*
Remote mounting kit Order with remote-mounting cordset VW3A1104R●●●	–	65	**VW3A1112**	–
Tightening tool for remote mounting kit	–	–	**ZB5AZ905**	0.016/ *0.035*
Remote-mounting cordset equipped with 2 RJ45 connectors	1/ *3.28*	–	**VW3A1104R10**	0.050/ *0.110*
	3/ *9.84*	–	**VW3A1104R30**	0.150/ *0.331*
	5/ *16.40*	–	**VW3A1104R50**	0.250/ *0.551*
	10/ *32.81*	–	**VW3A1104R100**	0.500/ *1.102*

Variable speed drives

Altivar Easy 610

Options: I/O modules

Communication buses and networks

PF142250

I/O option modules

Presentation

By installing I/O option modules, Altivar Easy 610 drives can be adapted to meet the needs of applications that manage additional sensors or specific sensors.

2 I/O option modules are available:
- ■ Digital and analog I/O option module
- ■ Relay output module

These I/O option modules as well as the communication modules insert into slot A on Altivar Easy 610 drives **1.**

Digital and analog I/O option module

- ■ 2 differential analog inputs configurable via software as current (0-20 mA/4-20 mA) or probe (PTC, PT100, or 2-wire or 3-wire PT1000) inputs
- □ 14-bit resolution
- ■ 6 x 24 V ⎓ positive or negative digital inputs
- □ sampling: 1 ms max.
- ■ 2 assignable digital outputs

Relay output module

- ■ 3 relay outputs with NO contacts
- ■ 1 fixed screw terminal block

PF140391

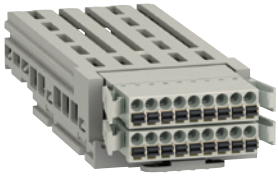

VW3A3203

PF130897

VW3A3204

References

Description	I/O type				Reference	Weight kg/ *lb*
	Digital inputs	Digital outputs	Analog inputs	Relay outputs		
Digital and analog I/O module	6	2	2 *(1)*	–	**VW3A3203**	–
Relay output module	–	–	–	3 *(2)*	**VW3A3204**	–

Integrated ports and communication protocol

Presentation

Altivar Easy 610 drives have 2 built-in RJ45 communication ports as standard:
- ■ one port dedicated to field network operation for exchanging data with other devices via the Modbus serial link protocol **1**
- ■ a second dedicated port for the multidrop connection of the following HMIs and configuration tools **4**:
  - □ the remote graphic display terminal or plain text terminal
  - □ a Magelis industrial HMI terminal

Altivar Easy 610 drives integrate the Modbus serial link communication protocol as standard.

The detailed specifications for serial communication ports and the Modbus protocol are available on our local website.

PF142250

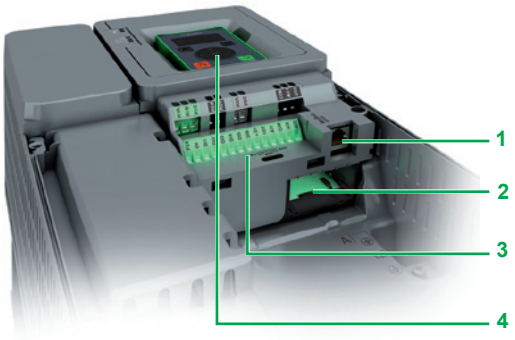

Description

1. RJ45 serial port
2. Slot A for I/O expansion or communication modules
3. Fixed screw terminal blocks for 24 V ⎓ power supply and integrated I/O
4. RJ45 serial link for HMI (remote plain text or graphic display terminals, Magelis terminal, etc.)

Altivar Easy 610 drives can take one communication module, or digital and analog I/O option module, or relay output module in slot A.

Note: *The user manuals and description files (gsd) for devices on the communication buses and networks are available on our website.*

(1) Differential analog inputs configurable via software as current (0-20 mA/4-20 mA) or probe (PTC, PT100, or 2-wire or 3-wire PT1000) inputs. When configured as PTC probe inputs, they must never be used to protect an ATEX motor in applications in explosive atmospheres. Please refer to the ATEX guide on our website.

(2) NO contacts.

General presentation: page 2 | Drives: page 6 | Configuration and runtime tools: page 8 | Motor starters: page 15 | Dimensions: page 17

Schneider Electric

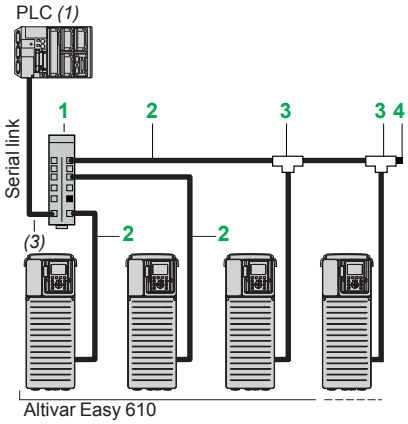

Example of serial link architecture

Integrated serial port *(continued)*

Description		Item	Length m/ *ft*	Unit reference	Weight kg/ *lb*
Connection accessories					
Splitter box 10 RJ45 connectors and 1 screw terminal block		1	–	**LU9GC3**	0.500/ *1.102*
Modbus T-junction boxes	With 0.3 m/*0.98 ft* integrated cable	3	0.3/ *0.98*	**VW3A8306TF03**	0.190/ *0.419*
	With 1 m/*3.28 ft* integrated cable	3	1/ *3.28*	**VW3A8306TF10**	0.210/ *0.463*
Modbus line terminator *(2)*	For RJ45 connector R = 120 Ω C = 1 nf	4	–	**VW3A8306RC**	0.010/ *0.022*
Cordsets equipped with 2 RJ45 connectors		2	0.3/ *0.98*	**VW3A8306R03**	0.025/ *0.055*
			1/ *3.28*	**VW3A8306R10**	0.060/ *0.132*
			3/ *9.84*	**VW3A8306R30**	0.130/ *0.287*

PROFIBUS DP V1 optional communication module

Presentation and functions

Altivar Easy 610 drives can also be connected to other industrial communication buses and networks using the communication module available as an option. This communication module is supplied in “cassette” format for ease of mounting/removal.

Dedicated communication module: PROFIBUS DP V1.
PROFIBUS DP V1 module also supports the Profidrive and CiA402 profiles.
It is possible to maintain communication using a separate power supply for the control and power sections. Monitoring and diagnostics are possible via the network even if there is no power supply to the power section.

All drive functions can be accessed via the various communication networks:
- Configuration
- Adjustment
- Control
- Monitoring

Altivar Easy 610 drives offer a high degree of interfacing flexibility with the possibility to assign, by configuration, the different control sources (I/O, communication networks, and HMI terminal) to control functions in order to meet the requirements of complex applications.

Communication is monitored according to the specific criteria for each protocol. However, regardless of the protocol, it is possible to configure how the drive responds to a detected communication interruption, as follows:
- Define the type of stop when a communication interruption is detected
- Maintain last command received
- Ignore the detected communication interruption

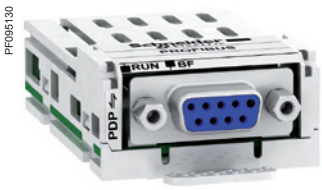

VW3A3607

References

Description	Reference	Weight kg/ *lb*
PROFIBUS DP V1 communication module Port: 1 x 9-way female SUB-D connector Conforming to PROFIBUS DP V1 Profiles supported: ■ CiA 402 drive ■ Profidrive Offers several message handling modes based on DP V1	**VW3A3607**	0.140/ *0.309*
IP 20 straight connectors *(4)* for Profibus module (SUB-D connection)	**LU9AD7**	–

(1) Please refer to the PLC catalogs on our website.
(2) Order in multiples of 2.
(3) Cable depends on the PLC.
(4) Only straight connectors are compatible with Altivar Easy 610 drives.

Variable speed drives

Altivar Easy 610

Options: dv/dt filters

Presentation

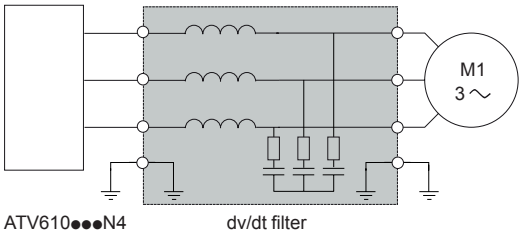

Altivar Easy 610 drive with dv/dt filter

Altivar Easy 610 drives operate with the following maximum motor cable lengths (without dv/dt filters):

- ■ ATV610U07N4…U55N4:
  - □ 100 m/*328.08 ft* for shielded cables
  - □ 150 m/*492.13 ft* for unshielded cables
- ■ ATV610U75N4...D45N4:
  - □ 100 m/*328.08 ft* for shielded cables
  - □ 200 m/*656.17 ft* for unshielded cables
- ■ ATV610D55N4…D90N4:
  - □ 150 m/*492.13 ft* for shielded cables
  - □ 200 m/*656.17 ft* for unshielded cables
- ■ ATV610C11N4…C16N4:
  - □ 150 m/*492.13 ft* for shielded cables
  - □ 200 m/*656.17 ft* for unshielded cables

To limit the impact of dv/dt filters and overvoltages at the motor side, it is recommended, for cables longer than 50 m/*164 ft*, that you check the motor insulation type and add an output filter if necessary.

Output filters are used to limit dv/dt at the motor terminals.

They are also used to:

- ■ Limit overvoltages at the motor terminals to:
  - □ 1000 V at 400 V ∿ (rms value)
- ■ Filter interference caused by opening a contactor placed between the filter and the motor
- ■ Reduce the motor ground leakage current

The performance of dv/dt filters will be affected if the maximum cable lengths are exceeded. For an application with several motors connected in parallel, the cable length must include all cabling. If a cable longer than that recommended is used, the dv/dt filters may overheat.

dv/dt filters

For drives	Maximum length of motor cable			Degree of protection	Nominal current	Unit reference	Weight
	Maximum switching frequency *(1)*	Shielded cable *(2)*	Unshielded cable *(2)*				
	kHz	m/*ft*	m/*ft*	IP	A		kg/*lb*
Three-phase supply voltage: 380...415 V							
ATV610U07N4...U22N4	4	150/492.13	200/656.17	20	6	**VW3A5301**	11.000/*24.251*
ATV610U30N4...U55N4	4	150/492.13	200/656.17	20	15	**VW3A5302**	12.000/*26.455*
ATV610U75N4...D15N4	4	250/*820.21*	300/*984.25*	20	25	**VW3A5303**	12.000/*26.455*
ATV610D18N4...D22N4	4	250/*820.21*	300/*984.25*	20	50	**VW3A5304**	18.000/*39.683*
ATV610D30N4...D45N4	4	250/*820.21*	300/*984.25*	20	95	**VW3A5305**	19.000/*41.888*
ATV610D55N4...D90N4	2.5	300/*984.25*	350/*1148.29*	00	180	**VW3A5306**	22.000/*48.502*
ATV610C11N4...C16N4	2.5	300/*984.25*	350/*1148.29*	00	305	**VW3A5307**	40.000/*88.185*

(1) The filters are designed to operate in a switching frequency range of between 2 and 8 kHz.
(2) Values given depend on the nominal switching frequency of the drive. This frequency depends on the drive rating. These cable lengths are given as examples only as they can vary depending on the application. They correspond to motors conforming to IEC 6034-25 and NEMA MG1/31.2006.

Variable speed drives

Altivar Easy 610

Motor starters

Supply voltage 380...415 V

NSX160●MA150

+

LC1D115●●

+

ATV610D55N4

Applications

Circuit breaker/contactor/drive combinations help to ensure continuity of service in an installation.
The type of circuit breaker/contactor coordination selected can help reduce maintenance costs in the event of a motor short-circuit on the drive input by minimizing the time required to make the necessary repairs and the cost of replacement equipment. The suggested combinations provide coordination according to the drive rating.

The drive controls the motor, provides a monitoring function against short-circuits between the drive and the motor, and helps protect the motor cable against overloads. Overload monitoring is provided by the drive's motor thermal monitoring function if this has been enabled. Otherwise, an external monitoring device such as a probe or thermal overload relay should be provided. The circuit breaker helps protect the drive's power cables against short-circuits.

IEC standard motor starters

Motor Power *(1)*		Drive reference	Circuit breaker			Line contactor reference *(3) (4)*
			Reference *(2)*	Rating (Ith)	Irm	
kW	*HP*			A	A	
Three-phase supply voltage: 380…415 V 50/60 Hz						
0.75	*1*	**ATV610U07N4**	**GV2ME08C**	4	51	**LC1D09●●**
1.5	*2*	**ATV610U15N4**	**GV2ME10C**	6.3	78	**LC1D09●●**
2.2	*3*	**ATV610U22N4**	**GV2ME14C**	10	138	**LC1D09●●**
3	*4*	**ATV610U30N4**	**GV2ME16C**	14	170	**LC1D25●●**
4	*5.4*	**ATV610U40N4**	**GV2ME16C**	14	170	**LC1D25●●**
5.5	*7.4*	**ATV610U55N4**	**GV2ME16C**	14	170	**LC1D25●●**
7.5	*10.1*	**ATV610U75N4**	**GV2ME20C**	18	223	**LC1D32●●**
11	*14.9*	**ATV610D11N4**	**GV2ME22C**	25	327	**LC1D32●●**
15	*20.3*	**ATV610D15N4**	**GV2ME32C**	32	448	**LC1D40A●●**
18.5	*25*	**ATV610D18N4**	**GV3L40**	40	560	**LC1D50A●●**
22	*30*	**ATV610D22N4**	**GV3L50**	50	700	**LC1D50A●●**
30	*40*	**ATV610D30N4**	**GV3ME80**	80	1000	**LC1D80●●**
37	*50*	**ATV610D37N4**	**NS80HMA80**	80	1000	**LC1D80●●**
45	*60*	**ATV610D45N4**	**NSX100●MA100**	100	1300	**LC1D115●●**
55	*75*	**ATV610D55N4**	**NSX160●MA150**	150	1500	**LC1D115●●**
75	*100*	**ATV610D75N4**	**NSX160●MA150**	150	1500	**LC1D150●●**
90	*125*	**ATV610D90N4**	**NSX250●MA220**	220	2420	**LC1F185●●**
110	*149*	**ATV610C11N4**	**NSX250●MA220**	220	2420	**LC1F185●●**
132	*178*	**ATV610C13N4**	**NSX400●MIC1●3320A**	320	3500	**LC1F265●●**
160	*216*	**ATV610C16N4**	**NSX400●MIC1●3320A**	320	4000	**LC1F265●●**

(1) Standard power ratings for 4-pole motors 400 V 50/60 Hz. The values expressed in HP comply with the NEC (National Electrical Code).
(2) For references to be completed, replace the dot with the letter corresponding to the breaking performance of the circuit breaker (F, N, H, S or L). See table below for breaking capacity of circuit breakers according to standard IEC 60947-2:

Circuit breaker	Icu (kA) for 380…415 V					
		F	N	H	S	L
GV2ME08C…ME14C	100	–	–	–	–	–
GV2ME16C…ME22C	15	–	–	–	–	–
GV2ME32C	10	–	–	–	–	–
GV3L40…50	50	–	–	–	–	–
GV3ME80	30	–	–	–	–	–
NS80HMA	70	–	–	–	–	–
NSX100●MA100	–	36	50	70	100	150
NSX160●MA150	–	36	50	70	100	150
NSX250●MA220	–	36	50	70	100	150
NSX400●MIC1●3320A	–	36	50	70	100	150

(3) Composition of contactors:
LC1D09...D150: 3 poles + 1 NO auxiliary contact and 1 NC auxiliary contact.
LC1F185...LC1F265: 3 poles. To add auxiliary contacts or other accessories, please refer to the "Motor-starter solutions - Control and protection components" catalog.
(4) Replace ●● with the control circuit voltage reference indicated in the table below:

	Volts ∿	24	48	110	220	230	240
LC1D09A …LC1D150	50 Hz	**B5**	**E5**	**F5**	**M5**	**P5**	**U5**
	60 Hz	**B6**	**E6**	**F6**	**M6**	**–**	**U6**
	50/60 Hz	**B7**	**E7**	**F7**	**M7**	**P7**	**U7**
LC1F185	50 Hz (LX1 coil)	**B5**	**E5**	**F5**	**M5**	**P5**	**U5**
	60 Hz (LX1 coil)	**–**	**E6**	**F6**	**M6**	**–**	**U6**
	40...400 Hz (LX9 coil)	**–**	**E7**	**F7**	**M7**	**P7**	**U7**
LC1F265	40...400 Hz (LX1 coil)	**B7**	**E7**	**F7**	**M7**	**P7**	**U7**

For other voltages available between 24 V and 660 V, or a DC control circuit, please contact our Customer Care Center.

Variable speed drives

Altivar Easy 610

Coordination table between drives and fuses

Coordination table between drives and fuses						
Variable speed drives					Semi-conductor fuses	
Line current		Icc (kA)	Type	Power	Nominal current	Type
380 V	415 V					
				kW	A	
3.1	2.9	5	ATV610U07N4	0.75	8	gR
5.7	5.3	5	ATV610U15N4	1.5	10	gR
7.8	7.1	5	ATV610U22N4	2.2	12	gR
10.1	9.2	5	ATV610U30N4	3	20	gR
8.8	8.5	5	ATV610U40N4	4	16	gR
11.6	11	22	ATV610U55N4	5.5	20	gR
14.7	13.7	22	ATV610U75N4	7.5	25	gR
22	20.7	22	ATV610D11N4	11	40	gR
29.4	27.7	22	ATV610D15N4	15	50	gR
37.2	35.2	22	ATV610D18N4	18.5	63	gR
41.9	39	22	ATV610D22N4	22	80	gR
62.5	59.7	22	ATV610D30N4	30	100	gR
76.6	72.9	22	ATV610D37N4	37	125	gR
92.9	88.3	22	ATV610D45N4	45	160	gR
111.5	105.6	22	ATV610D55N4	55	160	gR
147.9	139	22	ATV610D75N4	75	250	gR
177.8	168.5	50	ATV610D90N4	90	250	gR
200	186	50	ATV610C11N4	110	315	aR
236	219	50	ATV610C13N4	132	350	aR
283	261	50	ATV610C16N4	160	400	aR

Variable speed drives

Altivar Easy 610

Practical information for installation

Variable speed drives 380...415 V IP 20

Overall dimensions

Variable speed drives		W x H x D	
		mm	*in.*
ATV610U07N4		145 x 297 x 203	*5.71 x 11.69 x 7.99*
	with EMC plate	145 x 350 x 203	*5.71 x 13.78 x 7.99*
ATV610U15N4		145 x 297 x 203	*5.71 x 11.69 x 7.99*
	with EMC plate	145 x 350 x 203	*5.71 x 13.78 x 7.99*
ATV610U22N4		145 x 297 x 203	*5.71 x 11.69 x 7.99*
	with EMC plate	145 x 350 x 203	*5.71 x 13.78 x 7.99*
ATV610U30N4		145 x 297 x 203	*5.71 x 11.69 x 7.99*
	with EMC plate	145 x 350 x 203	*5.71 x 13.78 x 7.99*
ATV610U40N4		145 x 297 x 203	*5.71 x 11.69 x 7.99*
	with EMC plate	145 x 350 x 203	*5.71 x 13.78 x 7.99*
ATV610U55N4		145 x 297 x 203	*5.71 x 11.69 x 7.99*
	with EMC plate	145 x 350 x 203	*5.71 x 13.78 x 7.99*
ATV610U75N4		145 x 297 x 203	*5.71 x 11.69 x 7.99*
	with EMC plate	145 x 350 x 203	*5.71 x 13.78 x 7.99*
ATV610D11N4		171 x 360 x 233	*6.73 x 14.17 x 9.17*
	with EMC plate	171 x 423 x 233	*6.73 x 16.65 x 9.17*
ATV610D15N4		171 x 360 x 233	*6.73 x 14.17 x 9.17*
	with EMC plate	171 x 423 x 233	*6.73 x 16.65 x 9.17*
ATV610D18N4		211 x 495 x 232	*8.31 x 19.50 x 9.13*
	with EMC plate	211 x 580 x 232	*8.31 x 22.84 x 9.13*
ATV610D22N4		211 x 495 x 232	*8.31 x 19.50 x 9.13*
	with EMC plate	211 x 580 x 232	*8.31 x 22.84 x 9.13*
ATV610D30N4		226 x 613 x 271	*8.90 x 24.10 x 10.67*
	with EMC plate	226 x 706 x 271	*8.90 x 27.8 x 10.67*
ATV610D37N4		226 x 613 x 271	*8.90 x 24.10 x 10.67*
	with EMC plate	226 x 706 x 271	*8.90 x 27.8 x 10.67*
ATV610D45N4		226 x 613 x 271	*8.90 x 24.10 x 10.67*
	with EMC plate	226 x 706 x 271	*8.90 x 27.8 x 10.67*
ATV610D55N4		290 x 762 x 323	*11.42 x 30 x 12.72*
	with EMC plate	290 x 922 x 323	*11.42 x 36.30 x 12.72*
ATV610D75N4		290 x 762 x 323	*11.42 x 30 x 12.72*
	with EMC plate	290 x 922 x 323	*11.42 x 36.30 x 12.72*
ATV610D90N4		290 x 762 x 323	*11.42 x 30 x 12.72*
	with EMC plate	290 x 922 x 323	*11.42 x 36.30 x 12.72*
ATV610C11N4		320 x 853 x 390	*12.48 x 33.54 x 15.35*
	with kit for IP21 conformity	320 x 1159 x 390	*12.48 x 45.63 x 15.35*
ATV610C13N4		320 x 853 x 390	*12.48 x 33.54 x 15.35*
	with kit for IP21 conformity	320 x 1159 x 390	*12.48 x 45.63 x 15.35*
ATV610C16N4		320 x 853 x 390	*12.48 x 33.54 x 15.35*
	with kit for IP21 conformity	320 x 1159 x 390	*12.48 x 45.63 x 15.35*

dv/dt filters

Overall dimensions

dv/dt filters	W x H x D	
	mm	*in.*
VW3A5301	295 x 535 x 215	*11.61 x 21.06 x 8.47*
VW3A5302	295 x 535 x 215	*11.61 x 21.06 x 8.47*
VW3A5303	295 x 535 x 215	*11.61 x 21.06 x 8.47*
VW3A5304	295 x 560 x 245	*11.61 x 22.05 x 9.65*
VW3A5305	295 x 610 x 245	*11.61 x 24.02 x 9.65*
VW3A5306	380 x 235 x 350	*14.96 x 9.25 x 13.78*
VW3A5307	360 x 420 x 270	*14.17 x 16.54 x 10.63*

Product reference index

A

ATV610C11N4	6
ATV610C13N4	6
ATV610C16N4	6
ATV610D11N4	6
ATV610D15N4	6
ATV610D18N4	6
ATV610D22N4	6
ATV610D30N4	6
ATV610D37N4	6
ATV610D45N4	6
ATV610D55N4	6
ATV610D75N4	6
ATV610D90N4	6
ATV610U07N4	6
ATV610U15N4	6
ATV610U22N4	6
ATV610U30N4	6
ATV610U40N4	6
ATV610U55N4	6
ATV610U75N4	6

L

LU9AD7	13
LU9GC3	13

V

VW3A1104R10	9 11
VW3A1104R30	9 11
VW3A1104R50	9 11
VW3A1104R100	9 11
VW3A1111	10
VW3A1112	11
VW3A1113	8
VW3A1114	9
VW3A3203	12
VW3A3204	12
VW3A3607	13
VW3A5301	14
VW3A5302	14
VW3A5303	14
VW3A5304	14
VW3A5305	14
VW3A5306	14
VW3A5307	14
VW3A8306R03	13
VW3A8306R10	13
VW3A8306R30	13
VW3A8306RC	13
VW3A8306TF03	13
VW3A8306TF10	13
VW3A9704	7
VW3A47801	7
VW3A47802	7
VW3A47803	7
VW3A47804	7
VW3A47805	7

Z

ZB5AZ905	9 11

Schneider Electric Industries SAS

Head Office
35, rue Joseph Monier
F-92500 Rueil-Malmaison
France

www.schneider-electric.com

The information provided in this documentation contains general descriptions and/or technical characteristics of the performance of the products contained herein. This documentation is not intended as a substitute for and is not to be used for determining suitability or reliability of these products for specific user applications. It is the duty of any such user or integrator to perform the appropriate and complete risk analysis, evaluation and testing of the products with respect to the relevant specific application or use thereof. Neither Schneider Electric nor any of its affiliates or subsidiaries shall be responsible or liable for misuse of the information contained herein.

Design: Schneider Electric
Photos: Schneider Electric
Printed by:

DIA2ED2140702EN

June 2015 - V 3.0