Altivar Machine ATV340

Variable Speed Drives
Installation Manual

03/2019

CÔNG TY CỔ PHẦN THIẾT BỊ ĐIỆN HOÀNG PHƯƠNG
ĐC: Số 10, ngõ 44, phố Võ Thị Sáu, P.Thanh Nhàn, Q.Hai Bà Trưng, TP. Hà Nội
MST: 0106798886
Tel: 024.3215.1322
Website: Hoangphuong.com.vn
Email: Codienhoangphuong@gmail.com
Phone/Zalo: 0944 240 317 / 0975 123 698 / 0961 008 858

NVE61069.02

www.schneider-electric.com

The information provided in this documentation contains general descriptions and/or technical characteristics of the performance of the products contained herein. This documentation is not intended as a substitute for and is not to be used for determining suitability or reliability of these products for specific user applications. It is the duty of any such user or integrator to perform the appropriate and complete risk analysis, evaluation and testing of the products with respect to the relevant specific application or use thereof. Neither Schneider Electric nor any of its affiliates or subsidiaries shall be responsible or liable for misuse of the information contained herein. If you have any suggestions for improvements or amendments or have found errors in this publication, please notify us.

You agree not to reproduce, other than for your own personal, noncommercial use, all or part of this document on any medium whatsoever without permission of Schneider Electric, given in writing. You also agree not to establish any hypertext links to this document or its content. Schneider Electric does not grant any right or license for the personal and noncommercial use of the document or its content, except for a non-exclusive license to consult it on an "as is" basis, at your own risk. All other rights are reserved.

All pertinent state, regional, and local safety regulations must be observed when installing and using this product. For reasons of safety and to help ensure compliance with documented system data, only the manufacturer should perform repairs to components.

When devices are used for applications with technical safety requirements, the relevant instructions must be followed.

Failure to use Schneider Electric software or approved software with our hardware products may result in injury, harm, or improper operating results.

Failure to observe this information can result in injury or equipment damage.

© 2019 Schneider Electric. All rights reserved.

Table of Contents

Safety Information . . . 5
About the Book . . . 9
Chapter 1 Introduction . . . 13
Verifying the Absence of Voltage . . . 14
Drive Overview . . . 15
Accessories and Options . . . 19
Display Terminals . . . 20
Green Premium™ . . . 22
Steps for Setting Up the Drive . . . 23
Preliminary Instructions . . . 24
Chapter 2 Technical Data . . . 25
2.1 Mechanical Data . . . 26
Environmental Conditions . . . 27
Dimensions and Weights . . . 28
2.2 Electrical Data - Drive Ratings and Braking Resistors . . . 33
Drive Ratings in Heavy Duty . . . 34
Drive Ratings in Normal Duty . . . 36
Braking Resistors . . . 38
2.3 Electrical Data - Upstream Protective Device . . . 39
Introduction . . . 40
Prospective Short-Circuit Current . . . 42
IEC Type Circuit-Breaker as SCPD . . . 44
IEC Fuses gR / aR . . . 45
UL Circuit-Breakers and Fuses . . . 46
Chapter 3 Drive Mounting . . . 47
Mounting Conditions . . . 48
Derating Curves . . . 53
Mounting Procedures . . . 60
Chapter 4 Drive wiring . . . 61
4.1 General Wiring Information . . . 62
Wiring Instructions . . . 63
Cable Length Instructions . . . 67
Electromagnetic Compatibility . . . 68
4.2 General Wiring Diagrams . . . 70
Wiring Diagrams for Frame Sizes 1...3: ATV340U07N4•...D22N4• . . . 71
Wiring Diagrams for Frame Sizes 4 and 5: ATV340D30N4E...D75N4E . . . 73
4.3 Built-in EMC Filter . . . 75
Operation on an IT System . . . 76
Disconnecting the Built-in EMC Filter . . . 77
4.4 Power Part . . . 81
Wiring the Power Part . . . 82
Characteristics of the Power Part Terminals . . . 88
4.5 Control Part . . . 92
Arrangement and Characteristics of Control Block Terminals, Communication and I/O Ports 93
Control Terminals Electrical Data for Frame Sizes 1...3 . . . 97
Control Terminals Electrical data for Frame Sizes 4 and 5 . . . 108
Wiring The Control Part of Frame Sizes 4 and 5 . . . 112
Product LEDs . . . 120

4.6 SK EXT SRC Switch Configuration 123
SK-EXT-SRC Switch Configuration on Frame Sizes 1...3: ATV340U07N4•...D22N4• 124
SK-EXT-SRC Switch SW1 Configuration on Frame Sizes 4 and 5: ATV340D30N4E...D75N4E 125
4.7 PTO - DQ Switch (SW2) Configuration 126
PTO, Pulse Train Output Configuration on Frame Sizes 4 and 5 127
Digital Output Configuration on Frame Sizes 4 and 5 129
4.8 Safe Torque Off STO Function 131
STO Safe Torque Off Wiring Diagram for Frame Sizes 1...3 132
STO Safe Torque Off Wiring Diagram for Frame Sizes 4 and 5 132
4.9 Digital Inputs Wiring 133
Digital Inputs Wiring on Frame Sizes 1...3 134
Digital Inputs Wiring on Frame Sizes 4 and 5 136
4.10 Digital Outputs Wiring 137
Digital Outputs Wiring on Frame sizes 1...3 138
Digital Outputs Wiring on Frame sizes 4 and 5 138
4.11 Relay Contacts Wiring 139
Output Relay with Inductive AC Loads 140
Output Relay with Inductive DC loads 141
Chapter 5 Checking Installation 143
Before Switching On 143
Chapter 6 Maintenance 145
Scheduled Servicing 145
Long-term Storage 147
Decommissioning 147
Additional Support 147
Glossary 149

Safety Information

Important Information

NOTICE

Read these instructions carefully, and look at the equipment to become familiar with the device before trying to install, operate, service, or maintain it. The following special messages may appear throughout this documentation or on the equipment to warn of potential hazards or to call attention to information that clarifies or simplifies a procedure.

The addition of this symbol to a “Danger” or “Warning” safety label indicates that an electrical hazard exists which will result in personal injury if the instructions are not followed.

This is the safety alert symbol. It is used to alert you to potential personal injury hazards. Obey all safety messages that follow this symbol to avoid possible injury or death.

DANGER

DANGER indicates a hazardous situation which, if not avoided, **will result in** death or serious injury.

WARNING

WARNING indicates a hazardous situation which, if not avoided, **could result in** death or serious injury.

CAUTION

CAUTION indicates a hazardous situation which, if not avoided, **could result** in minor or moderate injury.

NOTICE

NOTICE is used to address practices not related to physical injury.

PLEASE NOTE

Electrical equipment should be installed, operated, serviced, and maintained only by qualified personnel. No responsibility is assumed by Schneider Electric for any consequences arising out of the use of this material.

A qualified person is one who has skills and knowledge related to the construction and operation of electrical equipment and its installation, and has received safety training to recognize and avoid the hazards involved.

Qualification Of Personnel

Only appropriately trained persons who are familiar with and understand the contents of this manual and all other pertinent product documentation are authorized to work on and with this product. In addition, these persons must have received safety training to recognize and avoid hazards involved. These persons must have sufficient technical training, knowledge and experience and be able to foresee and detect potential hazards that may be caused by using the product, by changing the settings and by the mechanical, electrical and electronic equipment of the entire system in which the product is used. All persons working on and with the product must be fully familiar with all applicable standards, directives, and accident prevention regulations when performing such work.

Intended Use

This product is a drive for three-phase synchronous, reluctance and asynchronous motors and intended for industrial use according to this manual. The product may only be used in compliance with all applicable safety standard and local regulations and directives, the specified requirements and the technical data. The product must be installed outside the hazardous ATEX zone. Prior to using the product, you must perform a risk assessment in view of the planned application. Based on the results, the appropriate safety measures must be implemented. Since the product is used as a component in an entire system, you must ensure the safety of persons by means of the design of this entire system (for example, machine design). Any use other than the use explicitly permitted is prohibited and can result in hazards.

Product Related Information

Read and understand these instructions before performing any procedure with this drive.

DANGER

HAZARD OF ELECTRIC SHOCK, EXPLOSION OR ARC FLASH

- Only appropriately trained persons who are familiar with and understand the contents of this manual and all other pertinent product documentation and who have received safety training to recognize and avoid hazards involved are authorized to work on and with this drive system. Installation, adjustment, repair and maintenance must be performed by qualified personnel.
- The system integrator is responsible for compliance with all local and national electrical code requirements as well as all other applicable regulations with respect to grounding of all equipment.
- Many components of the product, including the printed circuit boards, operate with mains voltage.
- Only use properly rated, electrically insulated tools and measuring equipment.
- Do not touch unshielded components or terminals with voltage present.
- Motors can generate voltage when the shaft is rotated. Prior to performing any type of work on the drive system, block the motor shaft to prevent rotation.
- AC voltage can couple voltage to unused conductors in the motor cable. Insulate both ends of unused conductors of the motor cable.
- Do not short across the DC bus terminals or the DC bus capacitors or the braking resistor terminals.
- Before performing work on the drive system:
  - Disconnect all power, including external control power that may be present. Take into account that the circuit breaker or main switch does not de-energize all circuits.
  - Place a **Do Not Turn On** label on all power switches related to the drive system.
  - Lock all power switches in the open position.
  - Wait 15 minutes to allow the DC bus capacitors to discharge.
  - Follow the instructions given in the chapter "Verifying the Absence of Voltage" in the installation manual of the product.
- Before applying voltage to the drive system:
  - Verify that the work has been completed and that the entire installation cannot cause hazards.
  - If the mains input terminals and the motor output terminals have been grounded and short-circuited, remove the ground and the short circuits on the mains input terminals and the motor output terminals.
  - Verify proper grounding of all equipment.
  - Verify that all protective equipment such as covers, doors, grids is installed and/or closed.

Failure to follow these instructions will result in death or serious injury.

Damaged products or accessories may cause electric shock or unanticipated equipment operation.

DANGER

ELECTRIC SHOCK OR UNANTICIPATED EQUIPMENT OPERATION

Do not use damaged products or accessories.

Failure to follow these instructions will result in death or serious injury.

Contact your local Schneider Electric sales office if you detect any damage whatsoever.

This equipment has been designed to operate outside of any hazardous location. Only install this equipment in zones known to be free of a hazardous atmosphere.

⚠ DANGER

POTENTIAL FOR EXPLOSION

Install and use this equipment in non-hazardous locations only.

Failure to follow these instructions will result in death or serious injury.

Your application consists of a whole range of different interrelated mechanical, electrical, and electronic components, the drive being just one part of the application. The drive by itself is neither intended to nor capable of providing the entire functionality to meet all safety-related requirements that apply to your application. Depending on the application and the corresponding risk assessment to be conducted by you, a whole variety of additional equipment is required such as, but not limited to, external encoders, external brakes, external monitoring devices, guards, etc.

As a designer/manufacturer of machines, you must be familiar with and observe all standards that apply to your machine. You must conduct a risk assessment and determine the appropriate Performance Level (PL) and/or Safety Integrity Level (SIL) and design and build your machine in compliance with all applicable standards. In doing so, you must consider the interrelation of all components of the machine. In addition, you must provide instructions for use that enable the user of your machine to perform any type of work on and with the machine such as operation and maintenance in a safe manner.

The present document assumes that you are fully aware of all normative standards and requirements that apply to your application. Since the drive cannot provide all safety-related functionality for your entire application, you must ensure that the required Performance Level and/or Safety Integrity Level is reached by installing all necessary additional equipment.

⚠ WARNING

INSUFFICIENT PERFORMANCE LEVEL/SAFETY INTEGRITY LEVEL AND/OR UNINTENDED EQUIPMENT OPERATION

- Conduct a risk assessment according to EN ISO 12100 and all other standards that apply to your application.
- Use redundant components and/or control paths for all critical control functions identified in your risk assessment.
- If moving loads can result in hazards, for example, slipping or falling loads, operate the drive in closed loop mode.
- Verify that the service life of all individual components used in your application is sufficient for the intended service life of your overall application.
- Perform extensive commissioning tests for all potential error situations to verify the effectiveness of the safety-related functions and monitoring functions implemented, for example, but not limited to, speed monitoring by means of encoders, short circuit monitoring for all connected equipment, correct operation of brakes and guards.
- Perform extensive commissioning tests for all potential error situations to verify that the load can be brought to a safe stop under all conditions.

Failure to follow these instructions can result in death, serious injury, or equipment damage.

A specific application note *NHA80973* is available on hoisting machines and can be downloaded on *se.com*.

Drive systems may perform unexpected movements because of incorrect wiring, incorrect settings, incorrect data or other errors.

⚠ WARNING

UNANTICIPATED EQUIPMENT OPERATION

- Carefully install the wiring in accordance with the EMC requirements.
- Do not operate the product with unknown or unsuitable settings or data.
- Perform a comprehensive commissioning test.

Failure to follow these instructions can result in death, serious injury, or equipment damage.

⚠ WARNING

LOSS OF CONTROL

- The designer of any control scheme must consider the potential failure modes of control paths and, for critical control functions, provide a means to achieve a safe state during and after a path failure. Examples of critical control functions are emergency stop, overtravel stop, power outage and restart.
- Separate or redundant control paths must be provided for critical control functions.
- System control paths may include communication links. Consideration must be given to the implications of unanticipated transmission delays or failures of the link.
- Observe all accident prevention regulations and local safety guidelines (1).
- Each implementation of the product must be individually and thoroughly tested for proper operation before being placed into service.

Failure to follow these instructions can result in death, serious injury, or equipment damage.

(1) For USA: Additional information, refer to NEMA ICS 1.1 (latest edition), Safety Guidelines for the Application, Installation, and Maintenance of Solid State Control and to NEMA ICS 7.1 (latest edition), Safety Standards for Construction and Guide for Selection, Installation and Operation of Adjustable-Speed Drive Systems.

The temperature of the products described in this manual may exceed 80 °C (176 °F) during operation.

⚠ WARNING

HOT SURFACES

- Ensure that any contact with hot surfaces is avoided.
- Do not allow flammable or heat-sensitive parts in the immediate vicinity of hot surfaces.
- Verify that the product has sufficiently cooled down before handling it.
- Verify that the heat dissipation is sufficient by performing a test run under maximum load conditions.

Failure to follow these instructions can result in death, serious injury, or equipment damage.

NOTICE

DESTRUCTION DUE TO INCORRECT MAINS VOLTAGE

Before switching on and configuring the product, verify that it is approved for the mains voltage.

Failure to follow these instructions can result in equipment damage.

About the Book

At a Glance

Document Scope

The purpose of this document is:
- to give you mechanical and electrical information related to the Altivar 340 drive,
- to show you how to install and wire this drive.

Validity Note

Original instructions and information given in the present document have been written in English (before optional translation).

This documentation is valid for the Altivar Machine ATV340 drive.

The technical characteristics of the devices described in the present document also appear online. To access the information online:

Step	Action
1	Go to the Schneider Electric home page *www.schneider-electric.com*.
2	In the **Search** box type the reference of a product or the name of a product range. ● Do not include blank spaces in the reference or product range. ● To get information on grouping similar modules, use asterisks (*).
3	If you entered a reference, go to the **Product Datasheets** search results and click on the reference that interests you. If you entered the name of a product range, go to the **Product Ranges** search results and click on the product range that interests you.
4	If more than one reference appears in the **Products** search results, click on the reference that interests you.
5	Depending on the size of your screen, you may need to scroll down to see the datasheet.
6	To save or print a datasheet as a .pdf file, click **Download XXX product datasheet**.

The characteristics that are presented in the present document should be the same as those characteristics that appear online. In line with our policy of constant improvement, we may revise content over time to improve clarity and accuracy. If you see a difference between the document and online information, use the online information as your reference.

Related Documents

Use your tablet or your PC to quickly access detailed and comprehensive information on all our products on www.schneider-electric.com.

The internet site provides the information you need for products and solutions:

- The whole catalog for detailed characteristics and selection guides,
- The CAD files to help design your installation, available in over 20 different file formats,
- All software and firmware to maintain your installation up to date,
- A large quantity of White Papers, Environment documents, Application solutions, Specifications... to gain a better understanding of our electrical systems and equipment or automation,
- And finally all the User Guides related to your drive, listed below:

(Other option manuals and Instruction sheets are available on *www.schneider-electric.com*)

Title of Documentation	Catalog Number
ATV340 Catalog	*DIA2ED2160701EN* (English), *DIA2ED2160701FR* (French)
ATV340 Getting Started - Video	FAQ *FA367923* (English)
ATV340 Getting Started	*NVE37643* (English), *NVE37642* (French), *NVE37644* (German), *NVE37646* (Spanish), *NVE37647* (Italian), *NVE37648* (Chinese), *NVE37643PT* (Portuguese), *NVE37643TR* (Turkish)
ATV340 Getting Started Annex (SCCR)	*NVE37641* (English)
Wiring Diagrams for Frame Sizes S1, S2, S3	*NVE97896* (English)
ATV340 Installation Manual	*NVE61069* (English), *NVE61071* (French), *NVE61074* (German), *NVE61075* (Spanish), *NVE61078* (Italian), *NVE61079* (Chinese), *NVE61069PT* (Portuguese), *NVE61069TR* (Turkish)
ATV340 Programming Manual	*NVE61643* (English), *NVE61644* (French), *NVE61645* (German), *NVE61647* (Spanish), *NVE61648* (Italian), *NVE61649* (Chinese), *NVE61643PT* (Portuguese), *NVE61643TR* (Turkish)
ATV340 Modbus manual (Embedded)	*NVE61654* (English)
ATV340 Ethernet manual (Embedded)	*NVE61653* (English)
ATV340 PROFIBUS DP manual (VW3A3607)	*NVE61656* (English)
ATV340 DeviceNet manual (VW3A3609)	*NVE61683* (English)
ATV340 PROFINET manual (VW3A3627)	*NVE61678* (English)
ATV340 CANopen manual (VW3A3608, 618, 628)	*NVE61655* (English)
ATV340 POWERLINK manual - (VW3A3619)	*NVE61681* (English)
ATV340 EtherCAT manual - (VW3A3601)	*NVE61686* (English)
ATV340 Sercos III manual (embedded)	*PHA33735* (English), *PHA33737* (French), *PHA33738* (German), *PHA33739* (Spanish), *PHA33740* (Italian), *PHA33741* (Chinese)
ATV340 Communication Parameters	*NVE61728* (English)
ATV340 ATEX manual	*NVE61651* (English)
ATV340 Embedded Safety Function Manual	*NVE64143* (English)
SoMove FDT	*SoMove_FDT* (English, French, German, Spanish, Italian, Chinese)
Altivar 340: DTM	*ATV340_DTM_Library_EN* (English), *ATV340_DTM_Lang_FR* (French), *ATV340_DTM_Lang_DE* (German), *ATV340_DTM_Lang_SP* (Spanish), *ATV340_DTM_Lang_IT* (Italian), *ATV340_DTM_Lang_CN* (Chinese)

You can download these technical publications and other technical information from our website at *www.schneider-electric.com/en/download*

Electronic Product Data sheet

Scan the QR code in front of the drive to get the product data sheet.

Terminology

The technical terms, terminology, and the corresponding descriptions in this manual normally use the terms or definitions in the relevant standards.

The technical terms, terminology, and the corresponding descriptions in this manual normally use the terms or definitions in the relevant standards.

Among others, these standards include:

- IEC 61800 series: Adjustable speed electrical power drive systems
- IEC 61508 Ed.2 series: Functional safety of electrical/electronic/programmable electronic safety-related
- EN 954-1 Safety of machinery - Safety related parts of control systems
- EN ISO 13849-1 & 2 Safety of machinery - Safety related parts of control systems.
- IEC 61158 series: Industrial communication networks - Fieldbus specifications
- IEC 61784 series: Industrial communication networks - Profiles
- IEC 60204-1: Safety of machinery - Electrical equipment of machines – Part 1: General requirements

In addition, the term **zone of operation** is used in conjunction with the description of specific hazards, and is defined as it is for a **hazard zone** or **danger zone** in the EC Machinery Directive (2006/42/EC) and in ISO 12100-1.

Also refer to the glossary at the end of this manual.

Contact Us

Select your country on:

www.schneider-electric.com/contact

Schneider Electric Industries SAS

Head Office

35, rue Joseph Monier

92500 Rueil-Malmaison

France

Chapter 1
Introduction

What Is in This Chapter?

This chapter contains the following topics:

Topic	Page
Verifying the Absence of Voltage	14
Drive Overview	15
Accessories and Options	19
Display Terminals	20
Green Premium™	22
Steps for Setting Up the Drive	23
Preliminary Instructions	24

Verifying the Absence of Voltage

Instructions

The DC bus voltage level is determined by measuring the voltage between the DC bus terminals PA/+ and PC/-.

The location of the DC bus terminals depends on the drive model.

Identify your drive model by referring to the nameplate of the drive. Then, refer to the chapter "Wiring the Power Part" *(see page 82)* for the location of the DC bus terminals PA/+ and PC/-.

⚠ ⚠ DANGER

HAZARD OF ELECTRIC SHOCK, EXPLOSION OR ARC FLASH

- Only appropriately trained persons who are familiar with and understand the contents of this manual and all other pertinent product documentation and who have received safety training to recognize and avoid hazards involved are authorized to work on and with this drive system. Installation, adjustment, repair and maintenance must be performed by qualified personnel.
- The system integrator is responsible for compliance with all local and national electrical code requirements as well as all other applicable regulations with respect to grounding of all equipment.
- Many components of the product, including the printed circuit boards, operate with mains voltage.
- Only use properly rated, electrically insulated tools and measuring equipment.
- Do not touch unshielded components or terminals with voltage present.
- Motors can generate voltage when the shaft is rotated. Prior to performing any type of work on the drive system, block the motor shaft to prevent rotation.
- AC voltage can couple voltage to unused conductors in the motor cable. Insulate both ends of unused conductors of the motor cable.
- Do not short across the DC bus terminals or the DC bus capacitors or the braking resistor terminals.
- Before performing work on the drive system:
  - Disconnect all power, including external control power that may be present. Take into account that the circuit breaker or main switch does not de-energize all circuits.
  - Place a **Do Not Turn On** label on all power switches related to the drive system.
  - Lock all power switches in the open position.
  - Wait 15 minutes to allow the DC bus capacitors to discharge.
  - Follow the instructions given in the chapter "Verifying the Absence of Voltage" in the installation manual of the product.
- Before applying voltage to the drive system:
  - Verify that the work has been completed and that the entire installation cannot cause hazards.
  - If the mains input terminals and the motor output terminals have been grounded and short-circuited, remove the ground and the short circuits on the mains input terminals and the motor output terminals.
  - Verify proper grounding of all equipment.
  - Verify that all protective equipment such as covers, doors, grids is installed and/or closed.

Failure to follow these instructions will result in death or serious injury.

Procedure

Perform the following actions to verify the absence of voltage

Step	Action
1	Measure the voltage on the DC bus between the DC bus terminals (PA/+ and PC/-) using a properly rated voltmeter to verify that the voltage is less than 42 Vdc
2	If the DC bus capacitors do not discharge properly, contact your local Schneider Electric representative. Do not repair or operate the product.
3	Verify that no other voltage is present in the drive system.

Drive Overview

The Range

ATV340 is available in 5 frame sizes.

Frame Sizes 1, 2 and 3

Frame Size 1, 2 and 3 are available in 3 versions.

ATV340••••**N4**: These drives include...

- 3 general-purpose slots (marked GP-••) for optional...
  - GP-SF: I/O or Safety module
  - GP-ENC: I/O or Encoder module
  - GP-FB: I/O or Fieldbus module

ATV340••••**N4E**: These drives include...

- 2 Advanced Ethernet RJ45 ports
  NOTE: please refer to the ATV340 Ethernet manual (Embedded) *NVE61653*
- 2 general-purpose slots (marked GP-••) for optional...
  - GP-SF: I/O or Safety module
  - GP-ENC: I/O or Encoder module

ATV340••••**N4S**: These drives include...

- 2 Sercos III RJ45 ports
  NOTE: Please refer to the ATV340 Sercos III manual (Embedded) *(see page 10)*.
- 2 general-purpose slots (marked GP-••) for optional...
  - GP-SF: I/O or Safety module
  - GP-ENC: I/O or Encoder module

Frame size 1	Frame size 2
• 3-phase 380...480 V, 0.75 kW...4 kW, 1...5 HP	• 3-phase 380...480 V, 5.5 kW...7.5 kW, 7...10 HP
ATV340U07N4•... ATV340U40N4•	ATV340U55N4•... ATV340U75N4•

Frame size 3
• 3-phase 380...480 V, 11 kW...22 kW, 15...30 HP
ATV340D11N4•... ATV340D22N4•

Frame Sizes 4 and 5

These drives include:

- 2 slots for optional module:
  - Slot A: for general-purpose I/O or Fieldbus option
  - Slot B: for general-purpose I/O or Encoder option
  - Slot C: for accessory general-purpose I/O or Safety option using the option module adapter accessory
- 2 Advanced Ethernet RJ45 ports

2 frame sizes IP20

Frame size 4	Frame size 5
● 3-phase 380...480 V, 30 kW...37 kW, 40...50 HP	● 3-phase 380...480 V, 45 kW...75 kW, 60...100 HP
ATV340D30N4E... ATV340D37N4E	ATV340D45N4E... ATV340D75N4E

Catalog Number Description

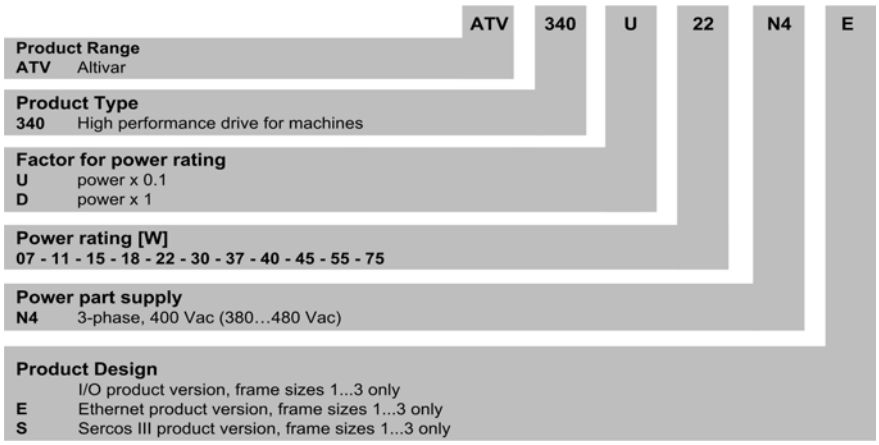

NOTE: see the catalog *(see page 10)* for possible combinations.

Nameplate example

The nameplate contains the following data:

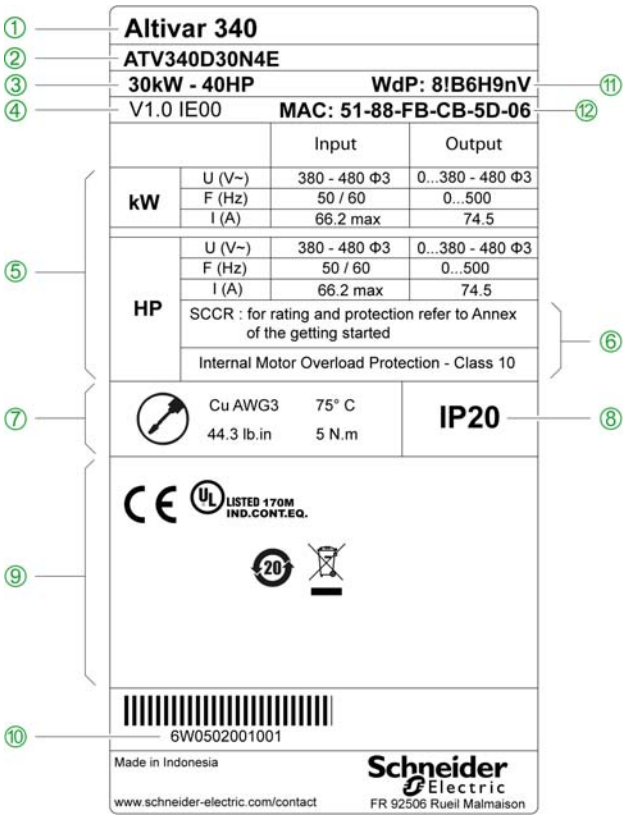

① Product type ② Catalog number ③ Power rating

④ Firmware version ⑤ Power part data input, output

⑥ Fuses and overload protection information ⑦ Power part cable information

⑧ Degree of protection ⑨ Certifications ⑩ Serial number

⑪ Webserver default password (*) ⑫ MAC address (*)

(*)

- Also refer to the Programming manual *(see page 10)*.
- If the Nameplate is not visible after the drive mounting phase, note or take a photo of the webserver default password.

Accessories and Options

Introduction

The Altivar Machine ATV340 drives are designed to take numerous accessories and options to increase their functionality. For a detailed description and catalog numbers, refer to the Catalog on *www.schneider-electric.com*

All accessories and options come with an instruction sheet to help installation and commissioning. Therefore you will only find here a short product description.

Accessories

Drive
- Fan replacement kit
- EMC kits
- Connector kits for I/O, motor and power connection
- Control cables
- Daisy chain DC bus sharing cable

Display terminals
- Plain Text Display Terminal for direct or remote mounting (*VW3A1113*)
- Graphic Display Terminal (*VW3A1111*) with a cable (frame sizes 1...3), for extended mounting
- Remote mounting kit for mounting on enclosure door
- Multidrop connection accessories for connecting several drives to the RJ45 terminal port

Drive mounting kits
- Flush mounting kit *(see page 49)* for separate air flow

Modbus Communication tools
- Wi-Fi dongle
- Bluetooth dongle
- USB to Modbus adapter

Options

Encoder interface modules
- Resolver encoder interface module
- Digital interface encoder module 5/12 V
- Analog interface encoder module

Additional Module Support for frame sizes 4 and 5 (slot C) *(see page 17)*

Safety functions module

I/O extension modules
- Digital and analog I/O module
- Relay output module

Communication modules
- CANopen daisy chain
- CANopen SUB-D
- CANopen screw terminal block
- PROFINET
- PROFIBUS DP V1
- DeviceNet
- EtherCAT

Braking resistors

Mains Chokes

EMC filters

Display Terminals

Introduction

The drive is compatible with the Plain Text Display Terminal (VW3A1113) or with the Graphic Display Terminal (VW3A1111). These display terminals can be ordered separately.

Refer to the ATV340 Programming manual *(see page 10)* for further operation details.

Description of the Plain Text Display Terminal (VW3A1113)

The Plain Text Display Terminal is a local control unit which can be either plugged on the drive or mounted on the door of an enclosure with its dedicated door mounting kit (VW3A1114).

1 **STOP / RESET**: Stop command / apply a Fault Reset.
2 **ESC**: used to quit a menu/parameter or remove the currently displayed value in order to revert to the previous value retained in the memory
3 **Graphic display**.
4 **Home**: access directly the home page.
5 **RUN**: executes the function assuming it has been configured.
6 **Touch wheel / OK**: used to save the current value or access the selected menu/parameter. The touch wheel is used to scroll fast into the menus. Up/down arrows are used for precise selections, right/left arrows are used to select digits when setting a numerical value of a parameter.

NOTE: Keys 1, 5 and 6 can be used to control the drive if control via the Display Terminal is activated. To activate the keys on the Display Terminal, you first need to set **[Ref Freq 1 Config]** Fr1 to **[Ref.Freq-Rmt.Term]** LCC.

Description of the Graphic Display Terminal (VW3A1111)

The Graphic Display Terminal is a local control unit which can be mounted on the door of an enclosure with its dedicated door mounting kit (VW3A1112). The Graphic Display Terminal embeds a real-time clock used for the time stamping of logged data and all other functions which require time information.

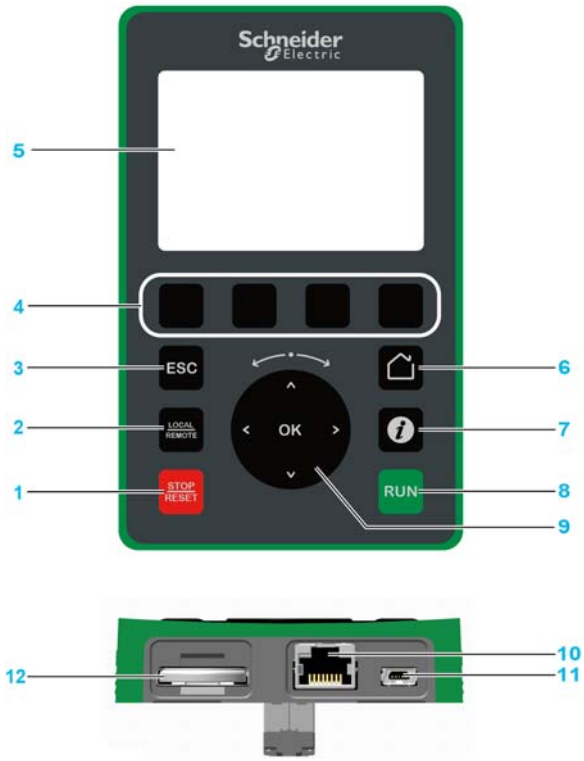

1 **STOP / RESET**: Stop command / apply a Fault Reset.
2 **LOCAL / REMOTE**: used to switch between local and remote control of the drive.
3 **ESC**: used to quit a menu/parameter or remove the currently displayed value in order to revert to the previous value retained in the memory
4 **F1 to F4**: function keys used to access drive id, QR code, quick view, and submenus. Simultaneous press of F1 and F4 keys generates a screenshot file in the Graphic Display Terminal internal memory.
5 **Graphic display**.
6 **Home**: used to access directly at the home page.
7 **Information**: used to have more information about menus, submenus, and parameters. The selected parameter or menu code is displayed on the first line of the information page.
8 **RUN**: executes the function assuming it has been configured.
9 **Touch wheel / OK**: used to save the current value or access the selected menu/parameter. The touch wheel is used to scroll fast into the menus. Up/down arrows are used for precise selections, right/left arrows are used to select digits when setting a numerical value of a parameter.
10 **RJ45 Modbus serial port**: used to connect the Graphic Display Terminal to the drive in remote control.
11 **Mini-B USB port**: used to connect the Graphic Display Terminal to a computer.
12 **Battery** (10 years service life. Type: CR2032). The battery positive pole points to the front face of the Graphic Display Terminal .

NOTE: Keys 1, 8 and 9 can be used to control the drive if control via the Display Terminal is activated. To activate the keys on the Display Terminal, you first need to set **[Ref Freq 1 Config]** Fr1 to **[Ref.Freq-Rmt.Term]** LCC.

Graphic Display Terminal Connected to a Computer

NOTICE
RISK OF DAMAGE TO THE COMPUTER Do not connect the Graphic Display Terminal to the drive via a Modbus RJ45 link and to the computer via a USB link at the same time. **Failure to follow these instructions can result in equipment damage.**

Green Premium™

Description

Information on the environmental impact of products, their resource efficiency, and end-of-life instructions.

Easy access to information: "Check Your Product"

Certificates and relevant product information available at the address:

www.schneider-electric.com/green-premium

You can download RoHS and REACh compliance declarations, Product Environmental Profiles (PEP) and End-of-Life instructions (EoLi).

Steps for Setting Up the Drive

Procedure

INSTALLATION

① Receive and inspect the drive controller

- ☐ Check that the catalog number printed on the label is the same as that on the purchase order
- ☐ Remove the drive from its packaging and check that it has not been damaged

② Verify the supply mains

- ☐ Verify that the supply mains is compatible with the power part supply range of the drive.

Steps 1 to 4 must be performed with the power off.

③ Mount the drive

- ☐ Mount the drive in accordance with the instructions in this document
- ☐ Install the transformer(s), if any
- ☐ Install any internal and external options

④ Wire the drive

- ☐ Connect the motor, ensuring that its connections correspond to the voltage
- ☐ Connect the supply mains, after making sure that the power is off
- ☐ Connect the control

⑤ PROGRAMMING

Refer to the Programming Manual

Preliminary Instructions

Verify the Delivery of the Drive

Damaged products or accessories may cause electric shock or unanticipated equipment operation.

⚠ ⚠ DANGER

ELECTRIC SHOCK OR UNANTICIPATED EQUIPMENT OPERATION

Do not use damaged products or accessories.

Failure to follow these instructions will result in death or serious injury.

Contact your local Schneider Electric sales office if you detect any damage whatsoever.

Step	Action
1	Remove the drive from the packaging and verify that it has not been damaged
2	Verify that the catalog number printed on the nameplate corresponds to the purchase order.

Handling and Storage

⚠ WARNING

INCORRECT HANDLING

- Follow all handling instructions provided in this manual and in all associated product documentation.
- Handle and store the product in its original packaging.
- Do not handle and store the product if the packaging is damaged or appears to be damaged.
- Take all measures required to avoid damage to the product and other hazards when handling or opening the packaging.

Failure to follow these instructions can result in death, serious injury, or equipment damage.

To help protect the drive before installation, handle and store the device in its packaging. Ensure that the ambient conditions are acceptable.

Handling the Drive

The drives of frame sizes 1, 2 and 3 can be removed from their packaging and installed without a handling device.

The drives of frame sizes 4 and 5 require a handling device; for this reason, these drives include lifting lugs.

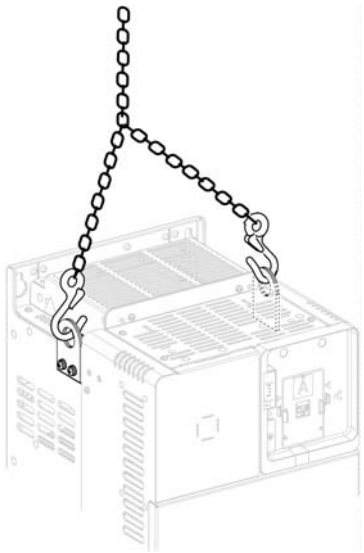

Chapter 2
Technical Data

What Is in This Chapter?

This chapter contains the following sections:

Section	Topic	Page
2.1	Mechanical Data	26
2.2	Electrical Data - Drive Ratings and Braking Resistors	33
2.3	Electrical Data - Upstream Protective Device	39

Section 2.1
Mechanical Data

What Is in This Section?

This section contains the following topics:

Topic	Page
Environmental Conditions	27
Dimensions and Weights	28

Environmental Conditions

Withstand to harsh environments

- Storage short time and transportation: 2C1, conforming to IEC/EN 60721-3-2
- Storage long time: 1C1, Conforming to IEC/EN 60721-3-1
- Chemical class: 3C3, conforming to IEC/EN 60721-3-3
- Mechanical class: 3S3, conforming to IEC/EN 60721-3-3

Temperature Conditions for Storage and Transportation

Ambient Air

For...	Drive Frame Size	Temperature		Comments
Transportation	1...5	°C	–40...70	The environment during transport and storage must be dry and dust-free. The bearing and transport temperature must remain within the specified range.
		°F	–40...158	
Storage	1...5	°C	5...40	
		°F	41...104	

Relative Humidity

Without dripping water and without condensation: 5...95%

Temperature Conditions for Operation

Ambient Air

Drive Frame Size	Temperature in Heavy Duty		Comments
1, 2 and 3	°C	-15...50	Without derating In Normal duty mode: -15...40°C (5...104°F)
	°F	5...122	
	°C	50...60	With derating In Normal duty mode: 40...50°C (104...122°F)
	°F	122...140	
4 and 5	°C	-15...50	Without derating
	°F	5...122	
	°C	50...60	With derating
	°F	122...140	

Operating Altitude

Operating possibilities according to the altitude

Altitude	Supply Electrical Network		Derating
	TT/TN	IT	
Up to 1000 m (3300 ft)	✓	✓	o
1000...2000 m (3300...6600 ft) Maximum ambient temperature 45 °C	✓	✓	✓
2000...3000 m (6600...9840 ft) Maximum ambient temperature 40 °C	✓	✓	✓
Legend: ✓: Derate the nominal current of the drive by 1% for each additional 100 m. o: Without derating			

Pollution Degree and Degree of Protection

Pollution Degree	Degree of Protection
2	IP20

Dimensions and Weights

About the drawings

All drawings CAD files can be downloaded from *www.schneider-electric.com*

NOTE:
The dimensions below do not include:
- A depth increase when using the optional plain text display terminal.
- On frame sizes 1, 2 and 3, a 50 mm (2 in.) distance for appropriate front control wiring,
- On frame sizes 4 and 5, a 40 mm (1.58 in) depth increase, if using the additional slot option. This option module takes place between the graphic display terminal and the drive, causing the depth value to be increased. It enables to connect a safety output module, an I/O or relay output module.

Frame Size 1

ATV340U07N4•... ATV340U40N4•

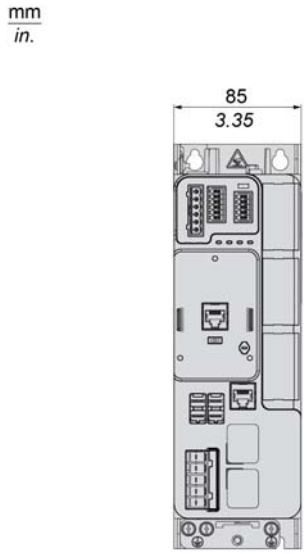

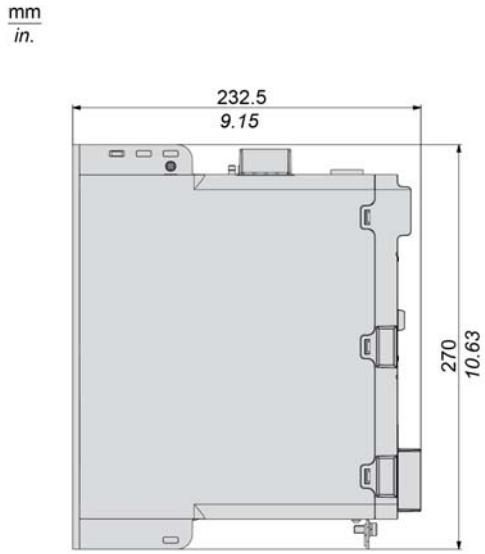

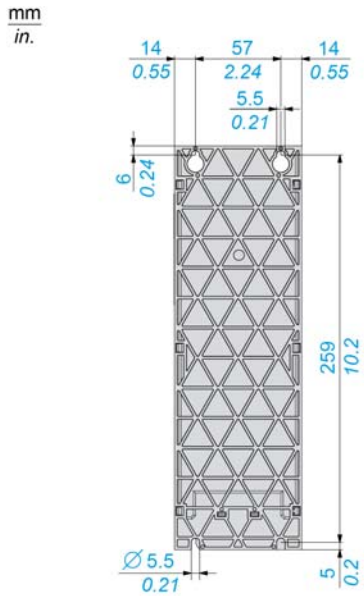

Weights

Catalog Number	Weight in kg (lb)
ATV340U07N4•, ATV340U15N4•	1.7 (3.7)
ATV340U22N4•	1.8 (4)
ATV340U30N4	2.1 (4.6)
ATV340U30N4E, ATV340U40N4	2.2 (4.8)
ATV340U40N4E	2.3 (5.1)

Frame Size 2

ATV340U55N4• and U75N4•

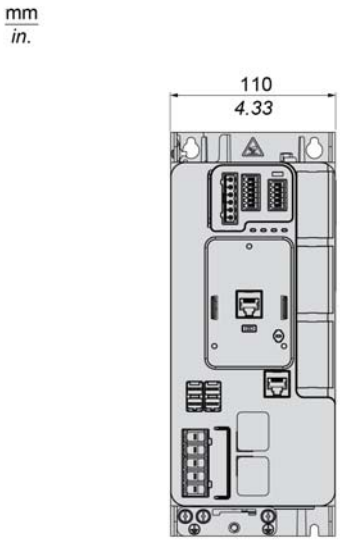

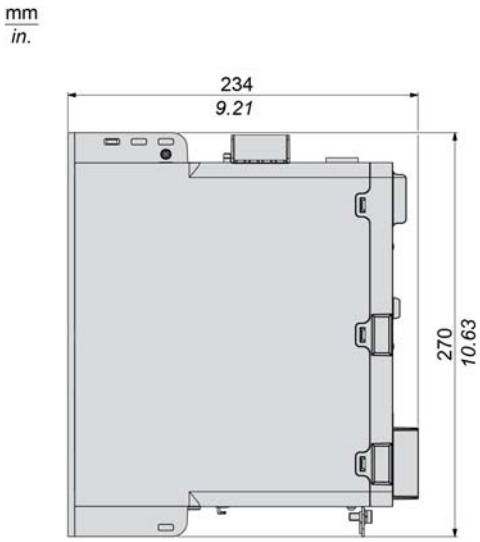

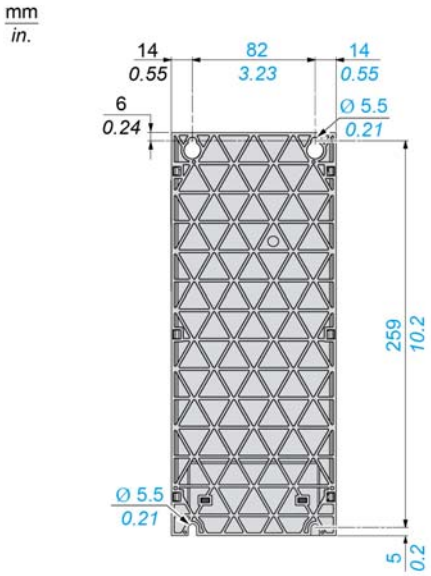

Weights

Catalog Number	Weight in kg (lb)
ATV340U55N4•	2.9 (6.4)
ATV340U75N4•	3 (6.6)

Frame Size 3

ATV340D11N4•... ATV340D22N4•

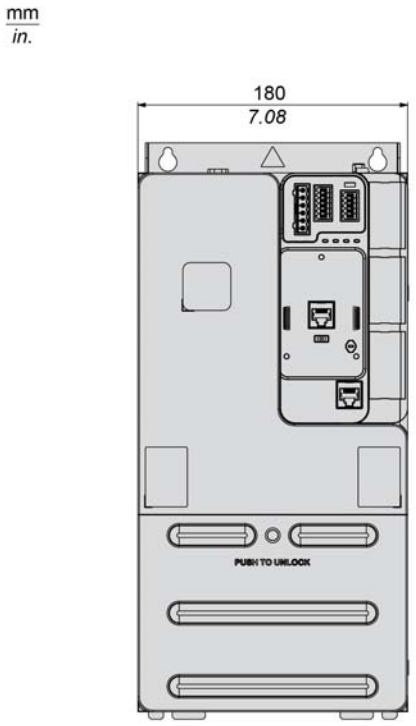

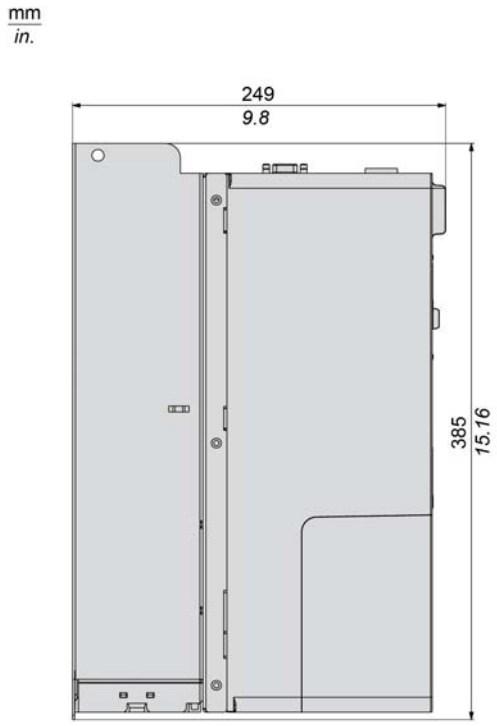

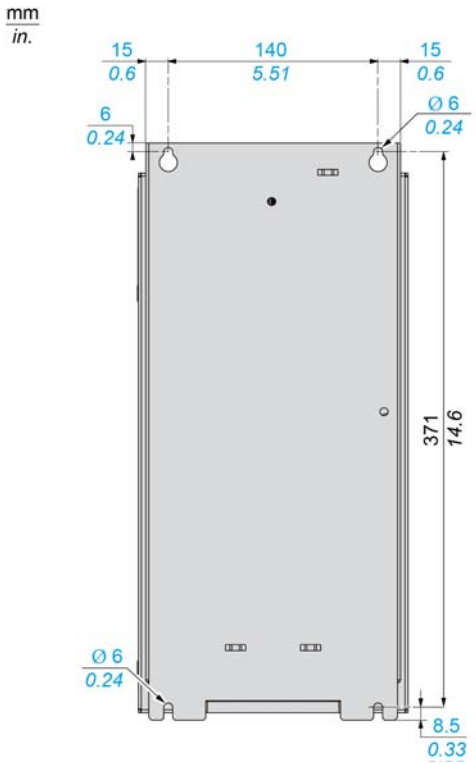

Weights

Catalog Number	Weight in kg (lb)
ATV340D11N4•, ATV340D15N4•	9.5 (20.9)
ATV340D18N4•, ATV340D22N4•	10.2 (22.5)

Frame Size 4

IP21 Drives - ATV340D30N4E... ATV340D37N4E

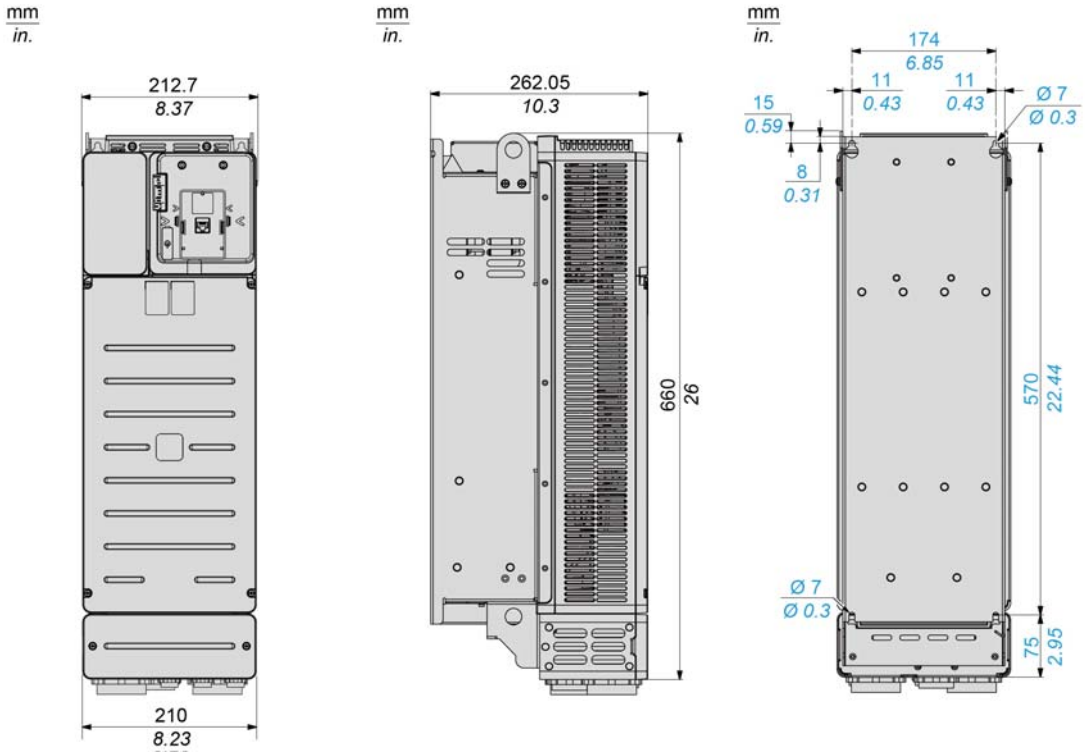

Weights

Catalog Number	Weight in kg (lb)
ATV340D30N4E	27.9 (61.5)
ATV340D37N4E	28.4 (62.6)

Frame Size 5

ATV340D45N4E...ATV340D75N4E

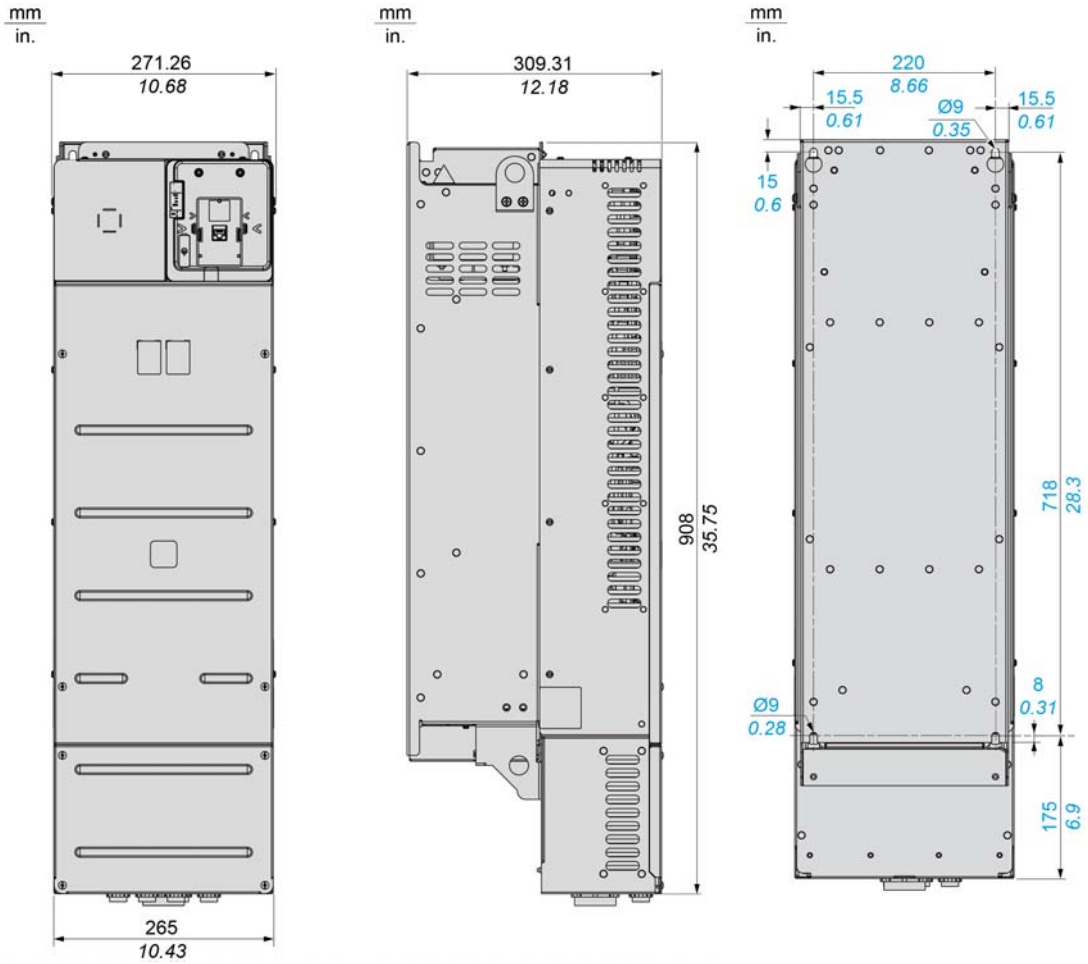

Weights

Catalog Number	Weight in kg (lb)
ATV340D45N4E	56.4 (124.3)
ATV340D55N4E	57.9 (127.6)
ATV340D75N4E	58.4 (128.7)

Section 2.2
Electrical Data - Drive Ratings and Braking Resistors

What Is in This Section?

This section contains the following topics:

Topic	Page
Drive Ratings in Heavy Duty	34
Drive Ratings in Normal Duty	36
Braking Resistors	38

Drive Ratings in Heavy Duty

Applications

Altivar Machine variable speed drives are designed for use in two operating modes Heavy duty and Normal duty *(see page 36)*. This enables to optimize the drive nominal rating according to the system constraints.

Heavy duty (HD) is a dedicated mode for applications requiring a significant overload (up to 150%) with a motor power identical to the drive nominal power

NOTE:

- For fuse and circuit-breaker ratings refer to the information provided in the Altivar Machine 340 Getting Started Annex (SCCR) *NVE37641* for UL/CSA compliance and also in the catalog *(see page 10)* for IEC compliance.
- For motor overload and drive thermal monitoring functions, refer to the ATV340 Programming manual *(see page 10)*.

3-Phase 380…480 Vac 50/60 Hz - Power Part Supply Ratings

Catalog Number	Frame Size	Nominal Power		Power Part Supply			
				Max. Input Current (1)		Maximum prospective line Isc (2)	Max. Inrush Current (3)
				At 380 Vac	At 480 Vac		
		kW	HP	A	A	kA	A
ATV340U07N4•	1	0.75	1	3.4	2.6	5	8.7
ATV340U15N4•	1	1.5	2	6	4.9	5	8.7
ATV340U22N4•	1	2.2	3	8.4	6.6	5	8.7
ATV340U30N4•	1	3	3	10.7	8.5	5	36.1
ATV340U40N4•	1	4	5	13.4	10.6	5	36.1
ATV340U55N4•	2	5.5	7	20	16	22	45.3
ATV340U75N4•	2	7.5	10	25.6	20.4	22	45.3
ATV340D11N4•	3	11	15	35.1	27.8	22	80.8
ATV340D15N4•	3	15	20	45.5	36	22	80.8
ATV340D18N4•	3	18.5	25	54.5	43.5	22	60.6
ATV340D22N4•	3	22	30	64.1	50.8	22	60.6
ATV340D30N4E	4	30	40	54.8	48.3	50	92
ATV340D37N4E	4	37	50	67.1	59	50	110
ATV340D45N4E	5	45	60	81.4	71.8	50	176
ATV340D55N4•	5	55	75	98.9	86.9	50	187
ATV340D75N4•	5	75	100	134.3	118.1	50	236

(1) Drive frame size 4, 5 uses an integrated DC choke, therewith the mains current harmonics and the mains current are reduced.

(2) The drive is designed for a corresponding line supply. If the Isc is higher a mains choke must be used.
Isc: Short circuit current. See the Annex to the Getting Started (*NVE37641*) for UL Short Circuit Current Ratings (SCCR) values.
The products of frame sizes 1, 2 and 3 have no means integrated to reduce the mains current harmonics. The THDi is > 120%. If lower harmonics are required use a mains choke.

(3) Peak current when power is switched on, for the maximum supply mains voltage.

3-Phase 380…480 Vac 50/60 Hz - Drive Power Part Output Ratings

Catalog Number	Frame Size	Nominal Power		Drive Power Part Output			
				Nominal Current (1)		Maximum transient current (60 s) (2)	Maximum transient current (2 s) (3)
				At 380 Vac	At 480 Vac		
		kW	HP	A	A	A	A
ATV340U07N4•	1	0.75	1	2.2	2.1	3.3	4
ATV340U15N4•	1	1.5	2	4	3.4	6	7.2
ATV340U22N4•	1	2.2	3	5.6	4.8	8	10.1
ATV340U30N4•	1	3	3	7.2	6.2	11	13
ATV340U40N4•	1	4	5	9.3	7.6	14	16.7
ATV340U55N4•	2	5.5	7	12.7	11	19.1	22.9
ATV340U75N4•	2	7.5	10	16.5	14	24.8	29.7
ATV340D11N4•	3	11	15	24	21	36	43
ATV340D15N4•	3	15	20	32	27	48	58
ATV340D18N4•	3	18.5	25	39	34	59	70
ATV340D22N4•	3	22	30	46	40	69	83
ATV340D30N4E	4	30	40	61.5		92.3	not allowed
ATV340D37N4E	4	37	50	74.5		111.8	
ATV340D45N4E	5	45	60	88		132	
ATV340D55N4E	5	55	75	106		159	
ATV340D75N4E	5	75	100	145		217.5	

(1) The switching frequency is adjustable from:
- 2...16 kHz for drive frame sizes 1...3, rated value: 4 kHz
- 2...12 kHz for drive frame size 4, rated value: 4 kHz
- 2...8 kHz for drive frame size 5, rated value: 2.5 kHz

For operation at switching frequencies higher than the rated value. Derating must be applied to the drive (output) current *(see page 53)*. In this case, switching frequency can be reduced if an excessive temperature rise occurs.

(2) The drive is designed to run up to 60 s at 150% of nominal current.

(3) The drives of frame sizes 1...3 are designed to run up to 2 s at 180% of nominal current.

Drive Ratings in Normal Duty

Applications

Altivar Machine variable speed drives are designed for use in two operating modes Heavy duty *(see page 34)* and Normal duty. This enables to optimize the drive nominal rating according to the system constraints.

Normal duty (ND): Dedicated mode for applications requiring a slight overload (up to 110%) with a motor power one rating higher than the drive nominal power

NOTE:

- For fuse and circuit-breaker ratings refer to the information provided in the Altivar Machine 340 Getting Started Annex (SCCR) *NVE37641* for UL/CSA compliance and also in the catalog *(see page 10)* for IEC compliance.
- For motor overload and drive thermal monitoring functions, refer to the ATV340 Programming manual *(see page 10)*.

3-Phase 380…480 Vac 50/60 Hz - Power Part Supply Ratings

Catalog Number	Frame Size	Nominal Power		Power Part Supply				
				Max. Input Current (1)		Required min. mains choke	Current Harmonics with min. choke, THDi	Max. Inrush Current (2)
				At 380 Vac	At 480 Vac			
		kW	HP	A	A	mH	%	A
ATV340U07N4•	1	1.1	1.5	3.3	2.6	2	94	8.7
ATV340U15N4•	1	2.2	3	5.7	4.6	2	77	8.7
ATV340U22N4•	1	3	3	7.7	6.2	1.47	80	8.7
ATV340U30N4•	1	4	5	10.1	8.1	1.1	80	36.1
ATV340U40N4•	1	5.5	7	13.4	10.8	0.8	79	36.1
ATV340U55N4•	2	7.5	10	18.0	14.5	0.58	82	45.3
ATV340U75N4•	2	11	15	25.5	20.5	0.4	83	45.3
ATV340D11N4•	3	15	20	33.9	27.2	0.3	82	80.8
ATV340D15N4•	3	18.5	25	42.4	34.1	0.24	81	80.8
ATV340D18N4•	3	22	30	49.9	40.2	0.2	81	60.6
ATV340D22N4•	3	30	40	67.9	54.4	0.15	80	60.6
ATV340D30N4E	4	37	50	66.2	57.3	–	< 48	92
ATV340D37N4E	4	45	60	79.8	69.1	–	< 48	110
ATV340D45N4E	5	55	75	97.2	84.2	–	< 48	176
ATV340D55N4E	5	75	100	131.3	112.7	–	< 48	187
ATV340D75N4E	5	90	125	156.2	135.8	–	< 48	236

(1) Drives of frame size 4 and 5 use an integrated DC choke, therewith the mains current harmonics and the mains current are reduced.
(2) Peak current when power is switched on, for the maximum supply mains voltage.

3-Phase 380…480 Vac 50/60 Hz - Drive Power Part Output Ratings

NOTE:

- At maximum ambient temperature of 40°C (104 °F), use of a mains choke is obligatory for drive frame size 1, 2 and 3.
- At maximum ambient temperature of 50°C (122 °F) for drive frame size 4 and 5.

Catalog Number	Frame Size	Nominal Power		Drive Power Part Output			
				Nominal Current (1)		Maximum transient current (60 s) (2)	Maximum transient current (2 s) (3)
				At 380 Vac	At 480 Vac		
		kW	HP	A	A	A	A
ATV340U07N4•	1	1.1	1.5	2.8	2.6	3.1	3.8
ATV340U15N4•	1	2.2	3	5.6	4.8	6.2	7.6
ATV340U22N4•	1	3	3	7.2	6.8	7.9	9.7
ATV340U30N4•	1	4	5	9.3	7.6	10.2	12.6
ATV340U40N4•	1	5.5	7	12.7	11	14	17.1
ATV340U55N4•	2	7.5	10	16.5	14	18.2	22.3
ATV340U75N4•	2	11	15	24	21	26.4	32.4
ATV340D11N4•	3	15	20	32	27	35.2	43.2
ATV340D15N4•	3	18.5	25	39	34	42.9	52.7
ATV340D18N4•	3	22	30	46	40	50.6	62.1
ATV340D22N4•	3	30	40	62	52	68.2	83.7
ATV340D30N4E	4	37	50	74.5		89.4	not allowed
ATV340D37N4E	4	45	60	88		105.6	
ATV340D45N4E	5	55	75	106		127.2	
ATV340D55N4E	5	75	100	145		174	
ATV340D75N4E	5	90	125	173		207.6	

(1) The switching frequency is adjustable from:
- 2...16 kHz for drive frame sizes 1...3, rated value: 4 kHz
- 2...12 kHz for drive frame size 4, rated value: 4 kHz
- 2...8 kHz for drive frame size 5, rated value: 2.5 kHz

For operation at switching frequencies higher than the rated value. Derating must be applied to the drive (output) current *(see page 53)*. In this case, switching frequency can be reduced if an excessive temperature rise occurs.

(2) The drive is designed to run up to 60 s at 110% of nominal current for frame sizes 1, 2 and 3.
The drive is designed to run up to 60 s at 120% of nominal current for frame sizes 4 and 5.

(3) The drives of frame sizes 1...3 are designed to run up to 2 s at 135% of nominal current.

Braking Resistors

General

Braking resistors allow the drives to operate while braking to a standstill or during slowdown braking, by dissipating the braking energy. They enable maximum transient braking torque.

- For a detailed description and catalog numbers, refer to the Catalog *(see page 10)* available on *www.schneider-electric.com*.
- For mounting instructions, wiring diagrams and other information, refer to the instruction sheet *NHA87388* supplied with the resistor and available on *www.schneider-electric.com*.

Minimum Resistor Values

Minimum allowed value of the resistor to be connected

Catalog Number	Minimum Value in Ω		Catalog Number	Minimum Value in Ω
ATV340U07N4•	78		ATV340D15N4•	16
ATV340U15N4•	52		ATV340D18N4•	13
ATV340U22N4•	52		ATV340D22N4•	10
ATV340U30N4•	31		ATV340D30N4E	10
ATV340U40N4•	31		ATV340D37N4E	10
ATV340U55N4•	31		ATV340D45N4E	5.2
ATV340U75N4•	28		ATV340D55N4E	3.9
ATV340D11N4•	16		ATV340D75N4E	3.9

Section 2.3
Electrical Data - Upstream Protective Device

What Is in This Section?

This section contains the following topics:

Topic	Page
Introduction	40
Prospective Short-Circuit Current	42
IEC Type Circuit-Breaker as SCPD	44
IEC Fuses gR / aR	45
UL Circuit-Breakers and Fuses	46

Introduction

Overview

DANGER

INSUFFICIENT PROTECTION AGAINST OVERCURRENTS CAN CAUSE FIRE OR EXPLOSION

- Use properly rated overcurrent protection devices.
- Use the fuses/circuit breakers specified.
- Do not connect the product to a supply mains whose prospective short circuit current rating (current that flows during a short circuit) exceeds the specified maximum permissible value.
- When rating the upstream mains fuses and the cross sections as well as the lengths of the mains cables, take into account the minimum required prospective short-circuit current (Isc). Refer to the Upstream Protection Device section.
- If the minimum required prospective short-circuit current (Isc) is not available, apply the instructions given in the section below.

Failure to follow these instructions will result in death or serious injury.

The specified maximum permissible values and products for IEC compliance are specified in the catalog.

The specified maximum permissible values and products for UL/CSA compliance are specified in the annex provided with the drive.

General

- The Short Circuit Protective Device (SCPD) rated to the drive will help protect the upstream installation in case of a short-circuit internal to the drive and mitigate the damage to the drive and its surrounding area.
- The SCPD rated to the drive is mandatory to help ensuring the safety of the Power Drive System. It comes in addition to the upstream branch circuit protection which is in compliance with the local regulation for electrical installation.
- The SCPD shall mitigate the damage in case of detected error condition such as an internal short-circuit of the drive.
- The SCPD must take into account both following characteristics...
  - a maximum prospective short-circuit current
  - a minimum required prospective short-circuit current (Isc).

If the minimum required prospective short-circuit current (Isc) is not available, increase the power of the transformer or decrease the length of the cables

In other cases, contact your Schneider Electric Customer Care Center (CCC) *www.se.com/CCC* for specific selection of Short Circuit Protective Device (SCPD).

Scope

The information below applies to drives fed by a 380...480 Vac mains supply.

Wiring Diagram

This diagram shows an example of installation with both SCPD types, Circuit-breaker *(see page 44)* and Fuse link *(see page 45)* rated to the drive.

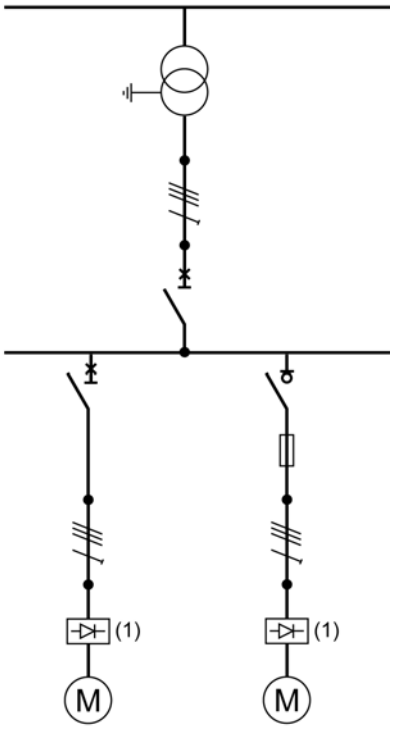

(1) Drive

Prospective Short-Circuit Current

Calculation

The prospective short-circuit current shall be computed at the drive connection points.

We recommend using the Schneider Electric tool Ecodial Advance Calculation available on *www.se.com/en/product-range-presentation/61013-ecodial-advance-calculation/*

The following equations allow to estimate the value of the symmetrical three-phase prospective short-circuit current (Isc) at the drive connection points.

$$Xt = \frac{U^2}{Sn} \cdot usc$$

$$Zcc = \sqrt{\left(\rho \cdot \frac{l}{S} + Rf\right)^2 + \left(Xt + Xc.l + Xf\right)^2}$$

$$Isc = \frac{U}{\sqrt{3}} \cdot \frac{1}{Zcc}$$

Isc	Symmetrical three-phase prospective short-circuit current (kA)
Xt	Transformer reactance
U	No-load phase to phase voltage of the transformer (V)
Sn	Apparent transformer power (kVA)
usc	Short-circuit voltage, according to the transformer data sheet (%)
Zcc	Total short-circuit impedance (mΩ)
ρ	Conductor resistivity e.g. Cu: 0.01851 mΩ.mm
l	Conductor length (mm)
S	Conductor cross section (mm^2)
Xc	Conductor lineic reactance (0.0001 mΩ/mm)
Rf, Xf	Resistance and reactance of the line filter (mΩ) *(see page 44)*

Example of Calculation with Copper Cable (without line filter)

Transformer 50 Hz	U 400 Vac Usc	Cable Cross Section	Isc depending on cable length in m(ft)							
			10 (33)	20 (66)	40 (131)	80 (262)	100 (328)	160 (525)	200 (656)	320 (1050)
kVA	%	mm^2 (AWG)	kA	kA	kA	kA	kA	kA	kA	kA
100	4	2.5 (14)	2.3	1.4	0.8	0.4	0.3	0.2	0.2	0.1
		4 (12)	2.9	2.0	1.2	0.6	0.5	0.3	0.2	0.2
		6 (10)	3.2	2.6	1.6	0.9	0.7	0.5	0.4	0.2
		10 (8)	3.4	3.1	2.3	1.4	1.2	0.8	0.6	0.4
		25 (4)	3.5	3.4	3.1	2.5	2.2	1.6	1.4	0.9
		50 (0)	3.5	3.5	3.3	3.0	2.8	2.3	2.1	1.5
		70 (00)	3.5	3.5	3.4	3.1	2.9	2.6	2.3	1.8
		120 (250 MCM)	3.6	3.5	3.4	3.2	3.1	2.8	2.6	2.1
250	4	6 (10)	5.7	3.4	1.8	0.9	0.7	0.5	0.4	0.2
		10 (8)	7.1	5.0	2.9	1.5	1.2	0.8	0.6	0.4
		25 (4)	8.4	7.4	5.5	3.4	2.8	1.8	1.5	0.9
		50 (0)	8.6	8.1	7.0	5.2	4.5	3.2	2.7	1.8
		70 (00)	8.6	8.2	7.3	5.8	5.2	3.9	3.3	2.3
		120 (250 MCM)	8.7	8.3	7.6	6.5	6.0	4.8	4.2	3.0
400	4	6 (10)	6.6	3.6	1.8	0.9	0.7	0.5	0.4	0.2
		10 (8)	9.2	5.6	3.0	1.5	1.2	0.8	0.6	0.4
		25 (4)	12	9.9	6.5	3.6	2.9	1.9	1.5	1.0
		50 (0)	13	12	9.3	6.1	5.1	3.4	2.8	1.8
		70 (00)	13	12	10	7.2	6.2	4.4	3.6	2.4
		120 (250 MCM)	13	13	11	8.6	7.6	5.7	4.9	3.4
800	6	6 (10)	6.9	3.7	1.9	0.9	0.7	0.5	0.4	0.2
		10 (8)	10	5.8	3.0	1.5	1.2	0.8	0.6	0.4
		25 (4)	15	11	6.9	3.7	3.0	1.9	1.5	1.0
		50 (0)	17	15	11	6.5	5.4	3.5	2.9	1.8
		70 (00)	17	15	12	7.9	6.7	4.6	3.7	2.4
		120 (250 MCM)	17	16	13	9.8	8.6	6.2	5.2	3.5
1000	6	6 (10)	7.1	3.7	1.9	0.9	0.7	0.5	0.4	0.2
		10 (8)	11	6.0	3.1	1.5	1.2	0.8	0.6	0.4
		25 (4)	18	12	7.1	3.7	3.0	1.9	1.5	1.0
		50 (0)	21	17	12	6.7	5.5	3.6	2.9	1.8
		70 (00)	21	18	13	8.4	7.0	4.7	3.8	2.4
		120 (250 MCM)	22	19	16	11	9.3	6.5	5.4	3.6

Additional Line Filter Option

If a line input filter option is required for the installation such as a line reactor or a passive harmonic filter, the minimum prospective short-circuit current capability of the source is reduced at the drive connection point and shall be estimated *(see page 42)* with the impedance values given in the table below.

Then, the SCPD type shall be selected according to the drive. If no selection is available, Schneider Electric Customer Care Center (CCC) *www.se.com/CCC* should be contacted.

EMC filter series have no significant effect on the minimum prospective short-circuit current capability of the main source.

Through the line option, the Isc will be limited to a maximum value independent of the transformer and cable. **Therefore the below equations can be used to estimate the minimum prospective short-circuit current capability.**

$$10\,m\Omega \le Xf \le 400\,m\Omega \quad \Rightarrow \quad Isc_{maxi}(kA) = 4.7 - 0.7 \cdot Log\,(Xf)$$

$$400\,m\Omega \le Xf \le 2000\,m\Omega \quad \Rightarrow \quad Isc_{maxi}(kA) = 2.05 - 0.26 \cdot \mathrm{Log}(Xf)$$

Log: Natural logarithm

Line Choke Filters Impedance Values

Line Choke Filter	Xf in mΩ
VZ1L004M010, *VW3A4551*	700
VZ1L007UM50, *VW3A4552*	300
VZ1L018UM20, *VW3A4553*	100
VW3A4554	70
VW3A4555	30
VW3A4556	20

IEC Type Circuit-Breaker as SCPD

Function

The circuit-breaker offers enhanced features versus fuse-link since it cumulates 3 functionalities:
- insulation with lock,
- switch (full load interruption),
- downstream short-circuit protection without replacement.

Selection Table

Schneider Electric circuit-breaker, setting and limits shall be selected according to the following table:

Catalog Number	Circuit-Breaker to IEC 60947-2	Ir m	Minimum Isc
		(A)	(A)
ATV340U07N4•	GV2L08	51	100
ATV340U15N4•	GV2L10	78	200
ATV340U22N4•	GV2L14	138	300
ATV340U30N4•, ATV340U40N4•	GV2L16	170	300
ATV340U55N4•	GV2L22	327	600
ATV340U75N4•	GV3L32	448	700
ATV340D11N4•	GV3L40	560	900
ATV340D15N4•	GV3L50	700	1100
ATV340D18N4•, ATV340D22N4•	GV3L65	910	1800
ATV340D30N4•	GV4L80	480	1800
ATV340D37N4•, ATV340D45N4•	GV4L115	690	2500
ATV340D55N4•	NSX160-MA150	1800	4200
ATV340D75N4•	NSX250-MA220	2420	5800

NOTE: Verify that the minimum required prospective short-circuit current (Isc) value from the table above is lower than the value estimated in the Calculation section *(see page 42)*.

IEC Fuses gR / aR

Selection Table

Current limiting fuses can be chosen as SCPD according to the following table:

Catalog Number	Fuse gR-aR to IEC 60269-4	Minimum Isc
	(A)	(A)
ATV340U07N4•	8	100
ATV340U15N4•	12,5	200
ATV340U22N4•	16	200
ATV340U30N4•	20	200
ATV340U40N4•	25	300
ATV340U55N4•, ATV340U75N4•	40	500
ATV340D11N4•	63	1000
ATV340D15N4•	80	1500
ATV340D18N4•, ATV340D22N4•, ATV340D30N4•	100	1500
ATV340D37N4•, ATV340D45N4•	125	2000
ATV340D55N4•	160	2500
ATV340D75N4•	200	4000

NOTE:

- Verify that the minimum required prospective short-circuit current (Isc) value from the table above is lower than the value estimated in the Calculation section *(see page 42)*.
- For information about fuses for maximum Isc, refer to the catalog *(see page 10)*.

UL Circuit-Breakers and Fuses

Reference Document

UL Fuse and circuit-breaker information is provided in the Annex for ATV340 Getting Started *(NVE37641)*.

Complementary Information

The following table shows the minimum required prospective short-circuit current (Isc) depending on the drive and **associated circuit-breaker**.

Catalog Number	PowerPact Circuit-breakers	Minimum Isc
		(A)
ATV340U07N4•, ATV340U15N4•	H•L36015	1500
ATV340U22N4•, ATV340U30N4•	H•L36015	1500
ATV340U40N4•	H•L36020	1500
ATV340U55N4•	H•L36025	1500
ATV340U75N4•	H•L36035	1700
ATV340D11N4•	H•L36045	1700
ATV340D15N4•	H•L36060	3000
ATV340D18N4•	H•L36070	3000
ATV340D22N4•	H•L36090	3000
ATV340D30N4•	H•L36125	3500
ATV340D37N4•	H•L36150	3500
ATV340D45N4•	H•L36175	3500
ATV340D55N4•	H•L36200	4000
ATV340D75N4•	H•L36250	5000

The following table shows the minimum required prospective short-circuit current (Isc) depending on the drive and **associated class J fuse**, according to UL248-8.

Catalog Number	Class J Fuse to UL248-8	Minimum Isc
	(A)	(A)
ATV340U07N4•	6	300
ATV340U15N4•	12	500
ATV340U22N4•	15	500
ATV340U30N4•	20	500
ATV340U40N4•	25	1000
ATV340U55N4•, ATV340U75N4•	40	1500
ATV340D11N4•	60	2000
ATV340D15N4•	70	2000
ATV340D30N4•	90	2500
ATV340D18N4•, ATV340D22N4•, ATV340D37N4•	100	2500
ATV340D45N4•	150	3500
ATV340D55N4•, ATV340D75N4•	200	5000

Chapter 3
Drive Mounting

What Is in This Chapter?

This chapter contains the following topics:

Topic	Page
Mounting Conditions	48
Derating Curves	53
Mounting Procedures	60

Mounting Conditions

Before You Begin

Conductive foreign objects, dust or liquids or damaged parts may cause parasitic voltage.

⚠ ⚠ DANGER

ELECTRIC SHOCK CAUSED BY FOREIGN OBJECTS OR DAMAGE

- Do not use damaged products.
- Keep foreign objects such as chips, screws or wire clippings from getting into the product.
- Verify correct seat of seals and cable entries in order to avoid deposits and humidity.

Failure to follow these instructions will result in death or serious injury.

The temperature of the products described in this manual may exceed 80 °C (176 °F) during operation.

⚠ WARNING

HOT SURFACES

- Ensure that any contact with hot surfaces is avoided.
- Do not allow flammable or heat-sensitive parts in the immediate vicinity of hot surfaces.
- Verify that the product has sufficiently cooled down before handling it.
- Verify that the heat dissipation is sufficient by performing a test run under maximum load conditions.

Failure to follow these instructions can result in death, serious injury, or equipment damage.

Power Drive Systems (PDS) can generate strong local electrical and magnetic fields. This can cause interference in electromagnetically sensitive devices.

⚠ WARNING

ELECTROMAGNETIC FIELDS

- Keep persons with electronic medical implants, such as pacemakers, away from the equipment.
- Do not place electromagnetically sensitive devices in the vicinity of the equipment.

Failure to follow these instructions can result in death, serious injury, or equipment damage.

Attach A Label With Safety Instructions

A label kit is provided with the drive. By default the English version of the label is attached to the drive.

Step	Action
1	Observe the safety regulations in the targeted country
2	Select the label suitable for the targeted country
3	Attach the label to the front of the device so that it is clearly visible. Below is the English version. The label may be different depending on the drive frame size. NOTE: **Products used in Canada** according to CSA C22.2 no.274 must comply with the requirement defined by the Canadian Advisory council of Electrical Safety (CACES). It defines that dual language (French and English) safety labeling is required on all products for use in Canada. To fulfill this requirement, add the French language safety label on the front panel of the product.

Webserver default Password

If the Nameplate is not visible after the drive mounting phase, note or take a photo of the webserver default password. *(see page 18)*

Mounting Types

This table shows the possible mounting types and the resulting IP degree of protection.

Mounting		Figure
Type	Description	
A	Side by side IP20	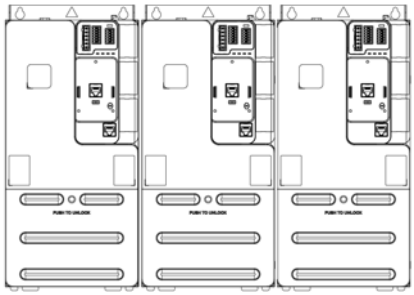 Frame sizes 1 and 2, at ambient temperature ≤ 50 °C (122 °F) Frame size3, at ambient temperature ≤ 40 °C (104 °F) Frame sizes 4 and 5: 2 drives only
B	Individual IP20	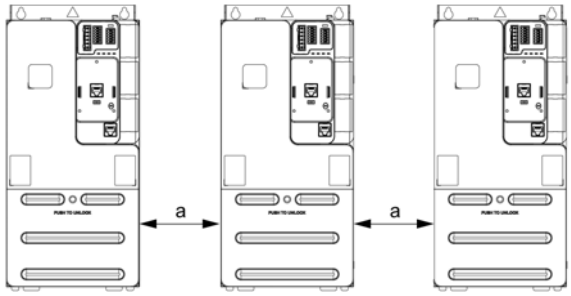 Frame sizes 1 and 2: ≤ 50 °C (122 °F): no restriction for distance a Frame sizes 1 and 2: 50...60 °C (122...140 °F): a ⩾ 50 mm (2 in) Frame sizes 3: ≤ 40 °C (104 °F): no restriction for distance a Frame sizes 3: 40...60 °C (104...140 °F): a ⩾ 50 mm (2 in) Frame sizes 4 and 5: a ⩾ 110 mm (4.33 in.)

Mounting		Figure
Type	Description	
–	Enclosed with flush-mounting kit for frame sizes 3, 4 and 5	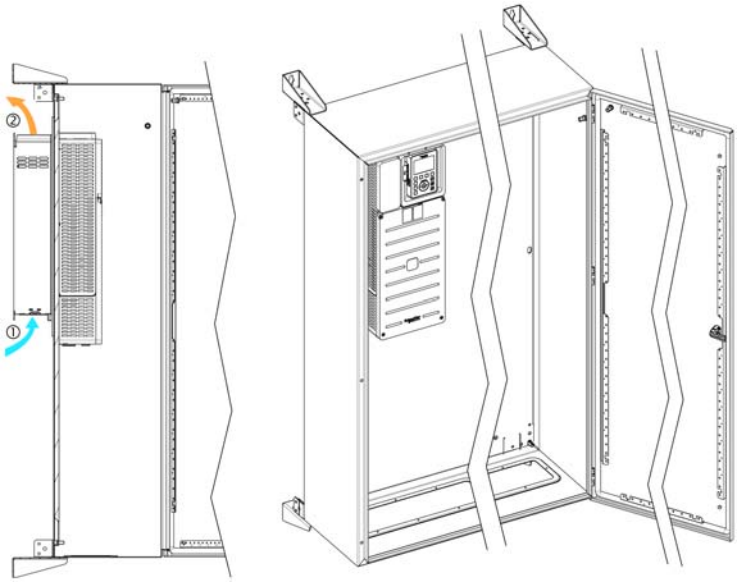 ①: Air inlet, ②: Air outlet This mounting type requires the dedicated mounting kit available on *www.schneider-electric.com* **NOTE:** Use *ProClima software* available on *www.schneider-electric.com* to support you to integrate Altivar Machine in an enclosure.

Clearances and Mounting Position in the Cabinet

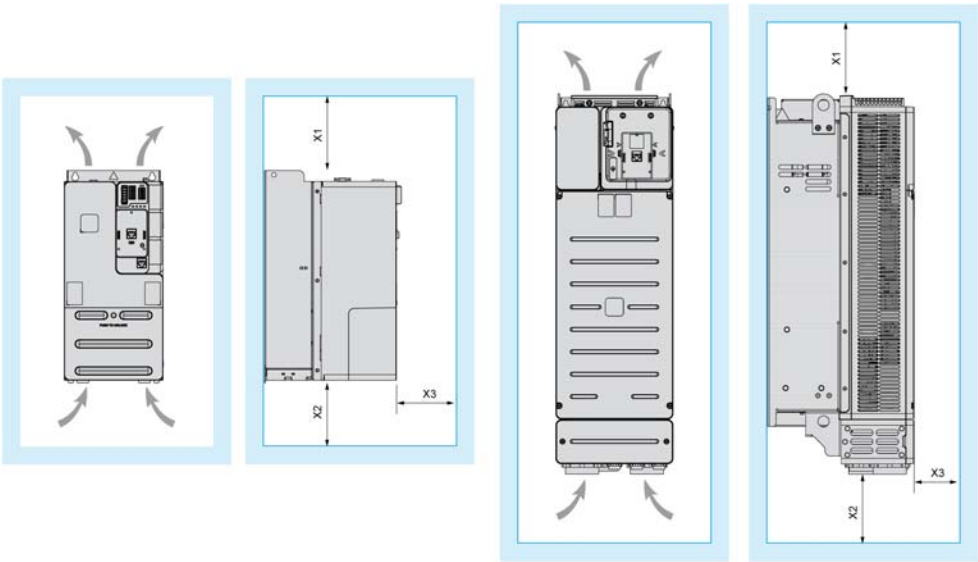

Minimum clearance regarding the drive frame size

Frame Size	X1	X2	X3
1, 2 and 3	⩾ 100 mm (3.94 in.) (a)	⩾ 100 mm (3.94 in.) (a)	⩾ 60 mm (2.36 in.) (b)
4 and 5	⩾ 100 mm (3.94 in.)	⩾ 100 mm (3.94 in.)	⩾ 10 mm (0.39 in.) (c)

a Frame sizes 1, 2 and 3 can be fitted with optional EMC kits. These kits could require more free space to cabinet top or bottom
b Frame sizes 1, 2 and 3 use front wiring and allow to plug plain text display terminal.
c Add 33 mm (1.3 in.) when using the optional additional module support VW3A3800 for slot C. Add 47 mm (1.85 in.) when using this option together with the advanced graphic display terminal.

General Mounting Instructions

- Install the drive in a cabinet or in a technical room. No wall mounting installation supported.
- Install drives of frame sizes 1 and 2 on a grounded back plane to improve EMC.
- Mount the drive in a vertical position. This is required for cooling the drive.
- Attach it on the mounting surface in compliance with standards, using the screws with captive washer according to the table given in Mounting Procedures *(see page 60)*.
- The use of washers is required with all mounting screws.
- Tighten the fixation screws.
- Do not mount the device close to heat sources.
- Avoid environmental effects like high temperatures and high humidity as well as dust, dirt and conductive gases.
- Adhere to the minimum installation distances for required cooling.
- Do not mount the device on flammable materials.
- Install the drive on a solid, vibration-free support.
- Maintain all wiring on backplates or by using existing EMC kits to avoid stress on connectors.
- For frame sizes 1, 2 and 3, use only the connectors supplied with the product for wiring. Connector kits are also available, refer to the catalog on *www.schneider-electric.com*

Power Dissipated in Heavy Duty Mode

NOTE: The data is given for rated output current, rated output power and nominal switching frequency. Frame sizes 1...4: 4 kHz, frame size 5: 2.5 kHz.

Catalog Number	Frame Size	Nominal Power		Power Dissipated (1)		Minimum air flow rate required per hour	
				Cooled Area			
				Forced	Natural		
		kW	HP	W	W	m^3	yd^3
ATV340U07N4•	1	0.75	1	28		18	24
ATV340U15N4•	1	1.5	2	46		18	24
ATV340U22N4•	1	2.2	3	65		18	24
ATV340U30N4•	1	3	3	78		19	25
ATV340U40N4•	1	4	5	99		19	25
ATV340U55N4•	2	5.5	7	134		76	100
ATV340U75N4•	2	7.5	10	180		76	100
ATV340D11N4•	3	11	15	241	13	128	168
ATV340D15N4•	3	15	20	346	18	128	168
ATV340D18N4•	3	18.5	25	410	21	128	168
ATV340D22N4•	3	22	30	486	28	128	168
ATV340D30N4E	4	30	40	640	77	240	240
ATV340D37N4E	4	37	50	796	90	240	240
ATV340D45N4E	5	45	60	943	105	295	386
ATV340D55N4E	5	55	75	917	115	295	386
ATV340D75N4E	5	75	100	1369	158	295	386

(1) The total losses are the sum of the losses in Forced cooled area, and the Natural cooled area (see below). When using the Push through/Flush mounting kit for frame size 3, 4 and 5 the losses of the forced cooled area are outside the cabinet.

Power Dissipated in Normal Duty Mode

NOTE: The data is given for rated output current, rated output power and nominal switching frequency. Frame sizes 1...4: 4 kHz, frame size 5: 2.5 kHz.

Catalog Number	Frame Size	Nominal Power		Power Dissipated (1)		Minimum air flow rate required per hour	
				Cooled Area			
				Forced	Natural		
		kW	HP	W	W	m^3	yd^3
ATV340U07N4•	1	1.1	1.5	33		18	24
ATV340U15N4•	1	2.2	3	59		18	24
ATV340U22N4•	1	3	3	80		18	24
ATV340U30N4•	1	4	5	96		19	25
ATV340U40N4•	1	5.5	7	130		19	25
ATV340U55N4•	2	7.5	10	164		76	100
ATV340U75N4•	2	11	15	249		76	100
ATV340D11N4•	3	15	20	311	16	128	168
ATV340D15N4•	3	18.5	25	411	21	128	168
ATV340D18N4•	3	22	30	464	23	128	168
ATV340D22N4•	3	30	40	631	39	128	168
ATV340D30N4E	4	37	50	796	90	240	240
ATV340D37N4E	4	45	60	943	105	240	240
ATV340D45N4E	5	55	75	917	115	295	386
ATV340D55N4E	5	75	100	1369	158	295	386
ATV340D75N4E	5	90	125	1585	180	295	386

(1) The total losses are the sum of the losses in Forced cooled area, and the Natural cooled area (see below). When using the Push through/Flush mounting kit for frame size 3, 4 and 5 the losses of the forced cooled area are outside the cabinet.

Constant Losses

NOTE: If an interface is not used, the associated losses must not be considered.

Device	Connector	Losses in W
Display terminal	HMI	1.5
Analog IOs	CN6	1.5
Onboard Encoder	CN3	0.5
Module Slot A/GP-FB	-	3
Module Slot B/GP-ENC	-	3
Module Slot C/GP-SF / Advanced Ethernet / Sercos III	- / Eth1, 2 / S3P1, S3P2	1
Digital inputs	CN6	1
200 mA output	CN2	4.8
Sum:		**16.3**

Derating Curves

Description

Derating curves for the nominal drive current (In) as a function of temperature and switching frequency. Refer to the Mounting Conditions chapter *(see page 48)* for the mounting types description.

Frame Size 1 - 0.7 kW

No derating required.

NOTE:
For 60°C operation:
- Type B mounting required
- No plain text display terminal plugged

Frame Size 1 - 1.5 kW

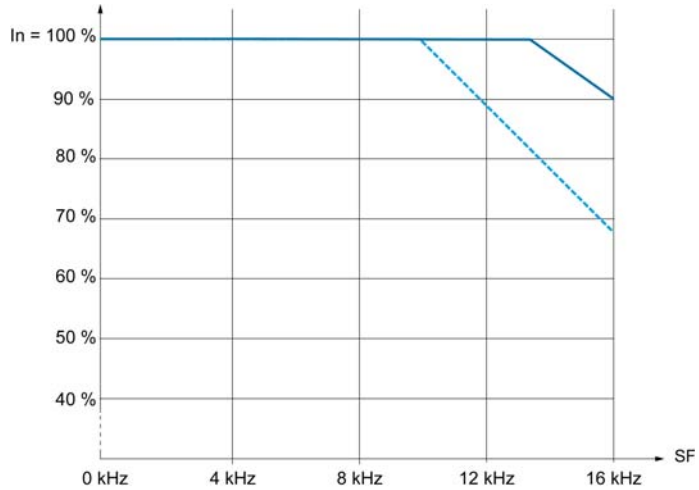

40 °C (104 °F) - Mounting type A
50 °C (122 °F) - Mounting type A

In Normal duty, these curves are also valid for a temperature 10°C less than the given temperatures.

NOTE:
For 60°C operation:
- Type B mounting required
- No plain text display terminal plugged
- No current derating needed

Frame Size 1 - 2.2 kW

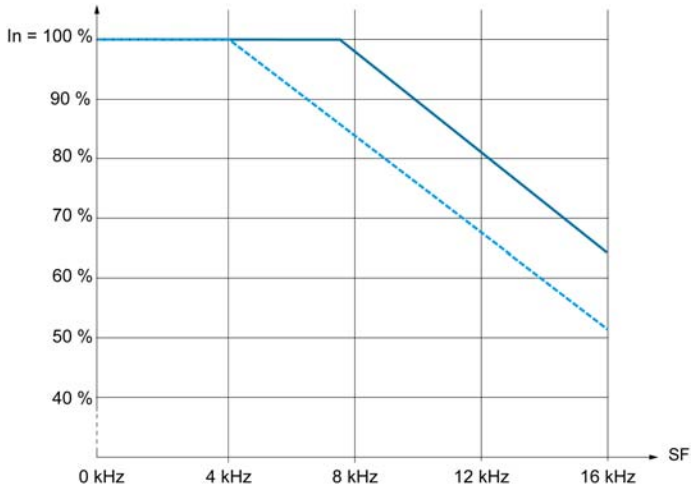

40 °C (104 °F) - Mounting type A
50 °C (122 °F) - Mounting type A

In Normal duty, these curves are also valid for a temperature 10°C less than the given temperatures.

NOTE:
For 60°C operation:
- Type B mounting required
- No plain text display terminal plugged
- No current derating needed

Frame Size 1 - 3 kW

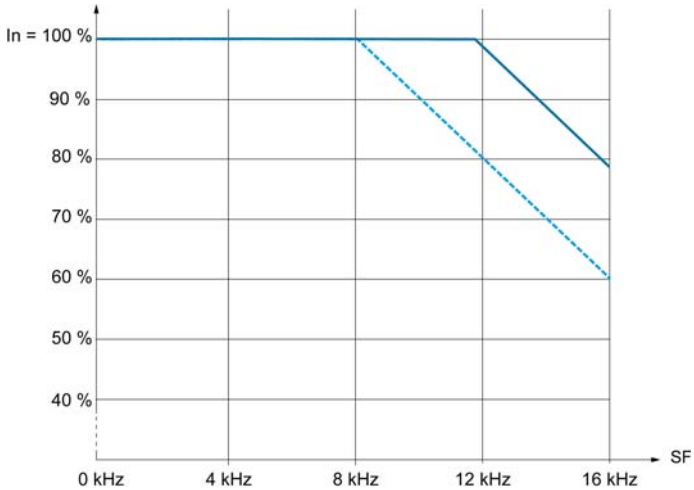

40 °C (104 °F) - Mounting type A
50 °C (122 °F) - Mounting type A

In Normal duty, these curves are also valid for a temperature 10°C less than the given temperatures.

NOTE:
For 60°C operation:
- Type B mounting required
- No plain text display terminal plugged
- No current derating needed

Frame Size 1 - 4 kW

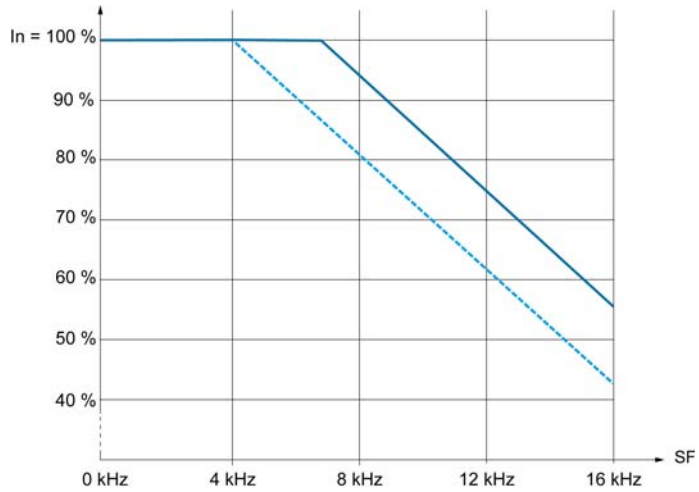

40 °C (104 °F) - Mounting type A
50 °C (122 °F) - Mounting type A

In Normal duty, these curves are also valid for a temperature 10°C less than the given temperatures.

NOTE:
For 60°C operation:
- Type B mounting required
- No plain text display terminal plugged
- No current derating needed

Frame Size 2 - 5.5 kW

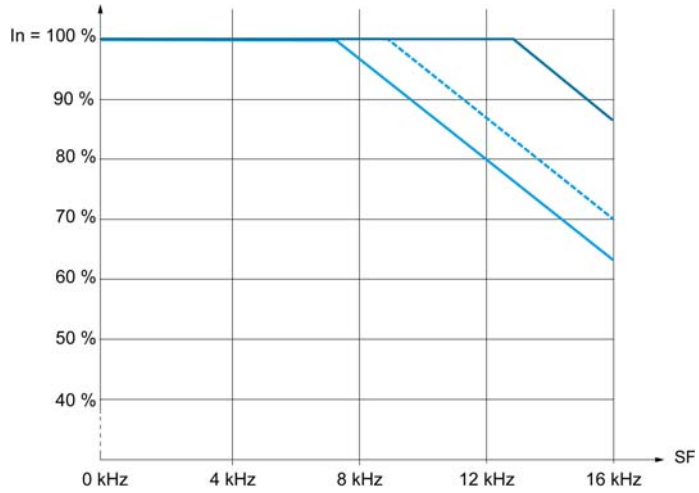

40 °C (104 °F) - Mounting type A and B
50 °C (122 °F) - Mounting type A and B
60 °C (140 °F) - Mounting type B

In Normal duty, these curves are also valid for a temperature 10°C less than the given temperatures.

NOTE:
For 60°C operation:
- No side-by-side mounting
- No plain text display terminal plugged

Frame Size 2 - 7.5 kW

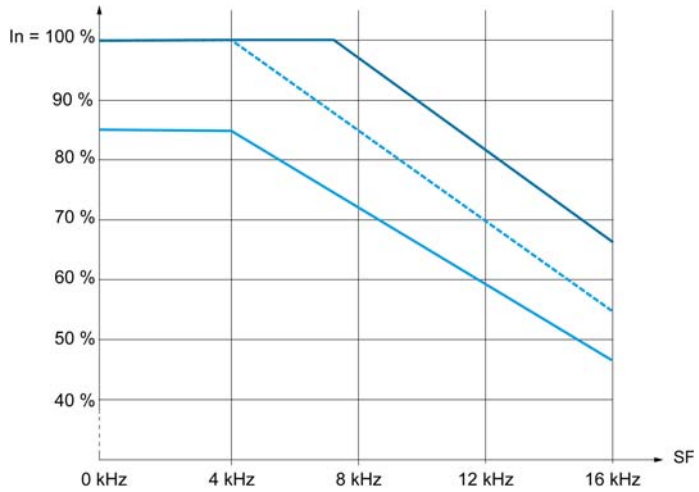

40 °C (104 °F) - Mounting type A and B
50 °C (122 °F) - Mounting type A and B
60 °C (140 °F) - Mounting type B

In Normal duty, these curves are also valid for a temperature 10°C less than the given temperatures.

NOTE:
For 60°C operation:
- No side-by-side mounting
- No plain text display terminal plugged

Frame Size 3 - 11 kW

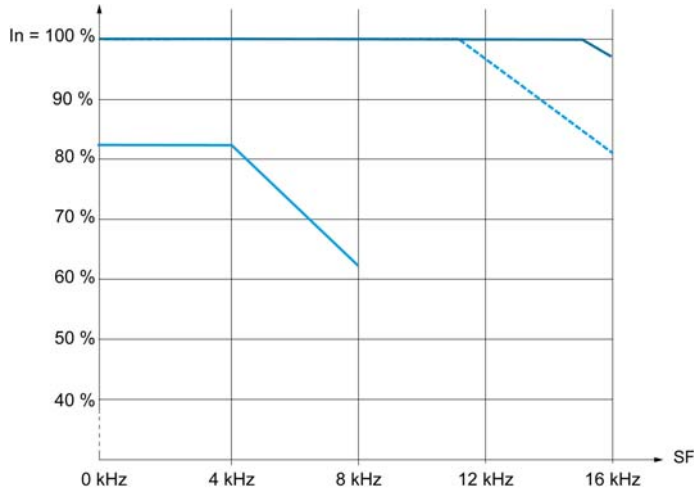

40 °C (104 °F) - Mounting type A and B
50 °C (122 °F) - Mounting type B
60 °C (140 °F) - Mounting type B

In Normal duty, these curves are also valid for a temperature 10°C less than the given temperatures.

NOTE:
- For operation > 40°C: No side-by-side mounting
- For operation > 50°C: No plain text display terminal plugged

Frame Size 3 - 15 kW

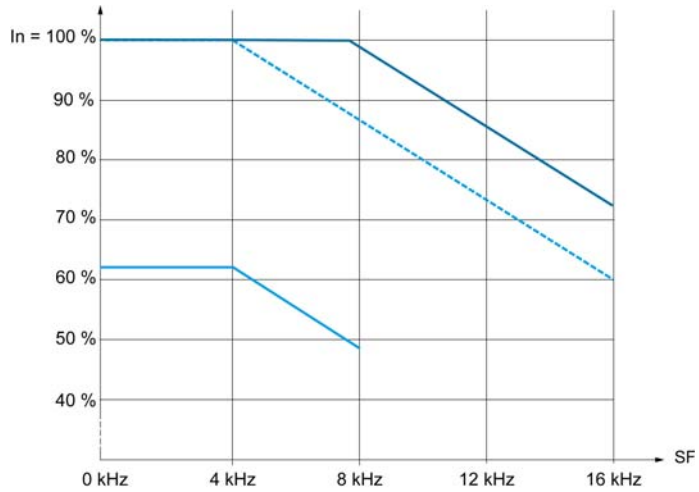

40 °C (104 °F) - Mounting type A and B
50 °C (122 °F) - Mounting type B
60 °C (140 °F) - Mounting type B

In Normal duty, these curves are also valid for a temperature 10°C less than the given temperatures.

NOTE:

- For operation > 40°C: No side-by-side mounting
- For operation > 50°C: No plain text display terminal plugged

Frame Size 3 - 18.5 kW

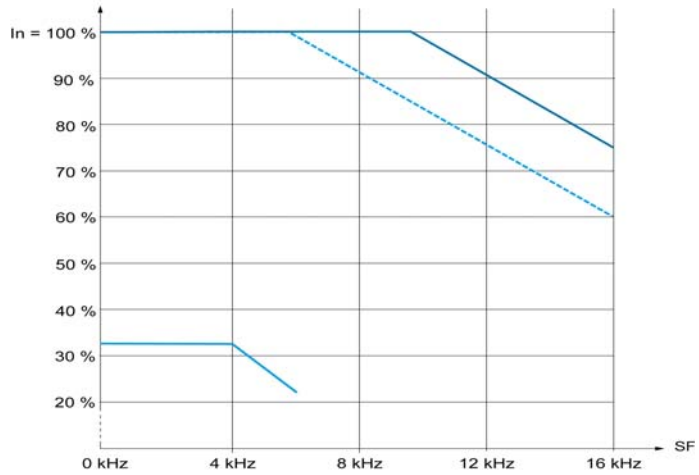

40 °C (104 °F) - Mounting type A and B
50 °C (122 °F) - Mounting type B
60 °C (140 °F) - Mounting type B

In Normal duty, these curves are also valid for a temperature 10°C less than the given temperatures.

NOTE:

- For operation > 40°C: No side-by-side mounting
- For operation > 50°C: No plain text display terminal plugged

Frame Size 3 - 22 kW

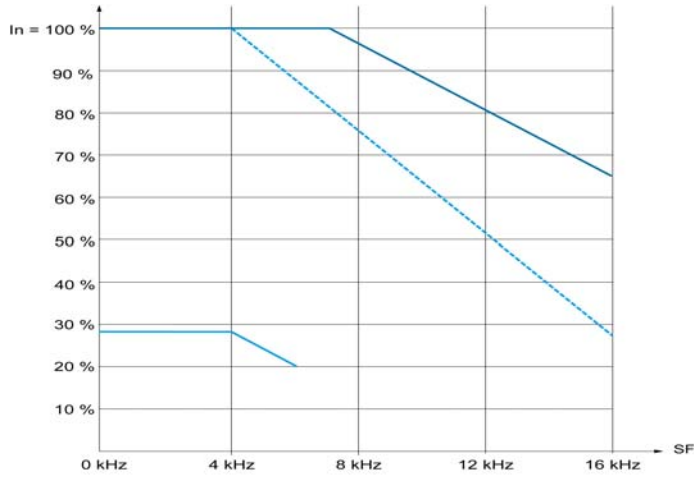

40 °C (104 °F) - Mounting type A and B
50 °C (122 °F) - Mounting type B
60 °C (140 °F) - Mounting type B

In Normal duty, these curves are also valid for a temperature 10°C less than the given temperatures.

NOTE:

- For operation > 40°C: No side-by-side mounting
- For operation > 50°C: No plain text display terminal plugged

Frame Size 4 - 30 and 37 kW

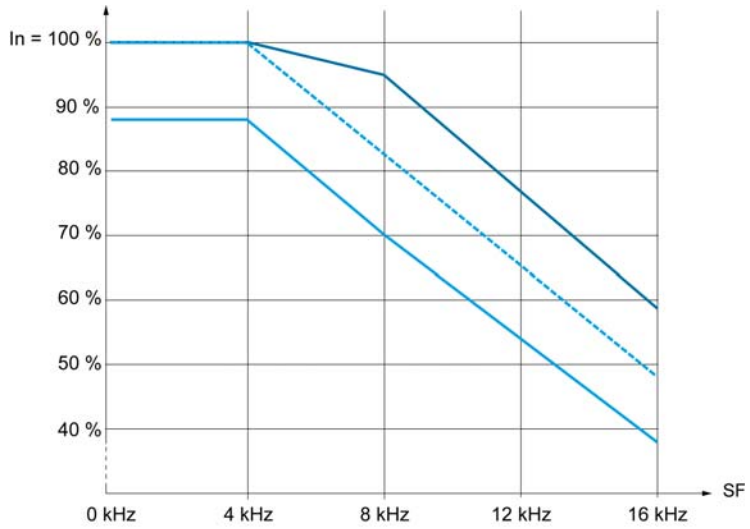

40 °C (104 °F) - Mounting type A and B
50 °C (122 °F) - Mounting type A and B
60 °C (140 °F) - Mounting type B

Frame Size 5 - 45, 55 and 75 kW

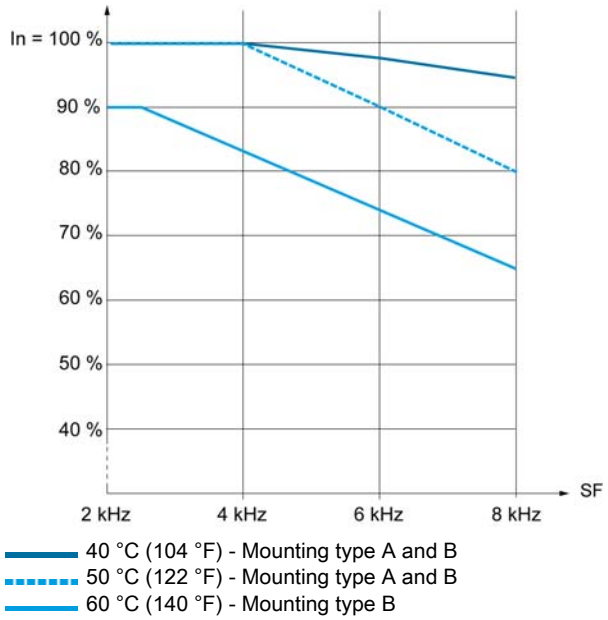

Mounting Procedures

Mounting Screws

Frame Size	Screw diameter
1	5 mm (0.2 in)
2	5 mm (0.2 in)
3	5 mm (0.2 in)
4	6 mm (0.24 in)
5	8 mm (0.3 in)

NOTE:
- Fixation by screws is required for all drives ratings.
- Screws are not delivered with the product.

Mounting Procedure For Frame Sizes 1 to 3

Mounting the drive does not require preliminary dismantling operation. Simply mount the drive to its support using the 4 screws with captive washer, according to the table above.

Mount the drive on a metallic backplane for EMC requirements.

Mounting Procedure For Frame Sizes 4 and 5

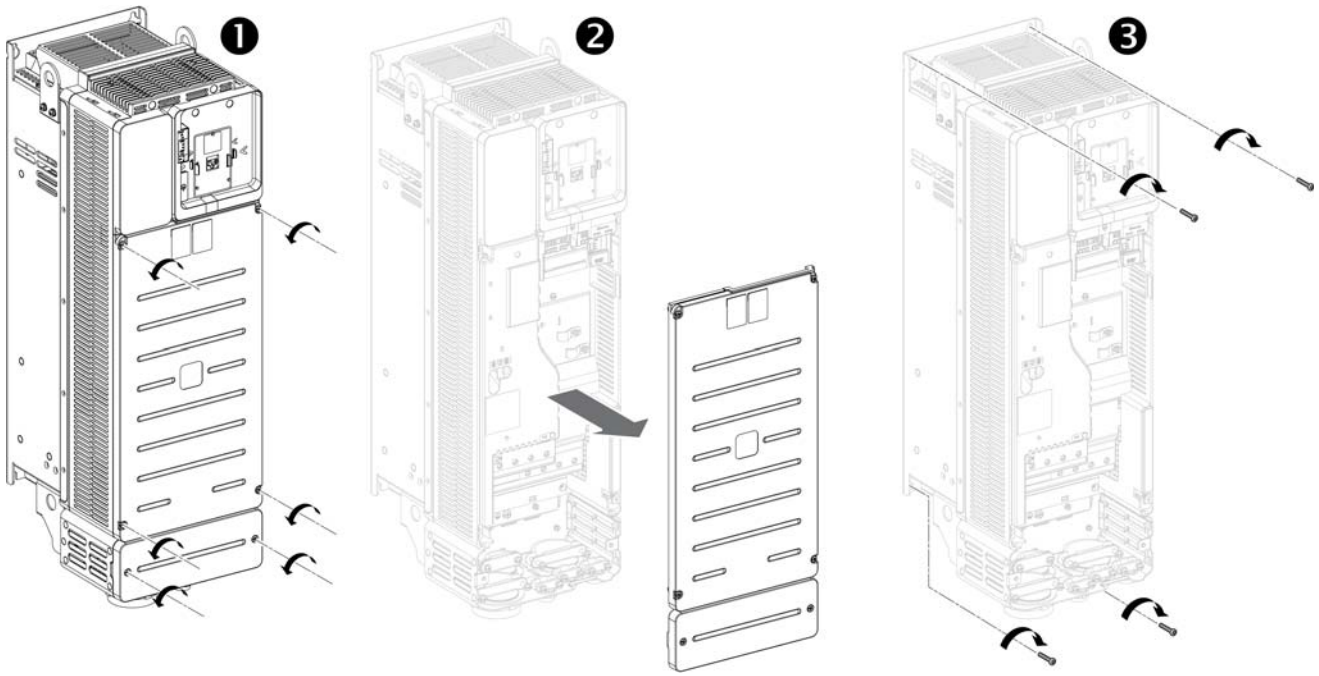

Perform the following instructions

Step	Action
1	Unscrew the 6 screws (frame size 4) or the 8 screws (frame size 5) attaching the front and bottom covers
2	Remove the covers
3	Attach the drive on the mounting surface using the screws with captive washer, according to the table above *(see page 60)*.

Chapter 4
Drive wiring

What Is in This Chapter?

This chapter contains the following sections:

Section	Topic	Page
4.1	General Wiring Information	62
4.2	General Wiring Diagrams	70
4.3	Built-in EMC Filter	75
4.4	Power Part	81
4.5	Control Part	92
4.6	SK EXT SRC Switch Configuration	123
4.7	PTO - DQ Switch (SW2) Configuration	126
4.8	Safe Torque Off STO Function	131
4.9	Digital Inputs Wiring	133
4.10	Digital Outputs Wiring	137
4.11	Relay Contacts Wiring	139

Section 4.1
General Wiring Information

What Is in This Section?

This section contains the following topics:

Topic	Page
Wiring Instructions	63
Cable Length Instructions	67
Electromagnetic Compatibility	68

Wiring Instructions

General Instructions

The entire installation procedure must be performed without voltage present.

⚠ ⚠ DANGER

HAZARD OF ELECTRIC SHOCK, EXPLOSION OR ARC FLASH

Read and understand the instructions in **Safety Information** chapter before performing any procedure in this chapter.

Failure to follow these instructions will result in death or serious injury.

Drive systems may perform unexpected movements because of incorrect wiring, incorrect settings, incorrect data or other errors.

⚠ WARNING

UNANTICIPATED EQUIPMENT OPERATION

- Carefully install the wiring in accordance with the EMC requirements.
- Do not operate the product with unknown or unsuitable settings or data.
- Perform a comprehensive commissioning test.

Failure to follow these instructions can result in death, serious injury, or equipment damage.

Unsuitable settings or unsuitable data or unsuitable wiring may trigger unintended movements, trigger signals, damage parts and disable monitoring functions.

⚠ WARNING

UNANTICIPATED EQUIPMENT OPERATION

- Only start the system if there are no persons or obstructions in the zone of operation.
- Verify that a functioning emergency stop push-button is within reach of all persons involved in the operation.
- Do not operate the drive system with unknown settings or data.
- Verify that the wiring is appropriate for the settings.
- Never modify a parameter unless you fully understand the parameter and all effects of the modification.
- When commissioning, carefully run tests for all operating states, operating conditions and potential error situations.
- Anticipate movements in unintended directions or oscillation of the motor.

Failure to follow these instructions can result in death, serious injury, or equipment damage.

⚠ ⚠ DANGER

HAZARD OF FIRE OR ELECTRIC SHOCK

- Wire cross sections and tightening torques must comply with the specifications provided in this document
- If you use flexible multi-wire cables for a connection with a voltage higher than 25 Vac, you must use ring type cable lugs or wire ferrules, depending on the connection.

Failure to follow these instructions will result in death or serious injury.

The product has a leakage current greater than 3.5 mA. If the protective ground connection is interrupted, a hazardous touch current may flow if the product is touched.

DANGER

ELECTRIC SHOCK CAUSED BY HIGH LEAKAGE CURRENT

- Verify compliance with all local and national electrical code requirements as well as all other applicable regulations with respect to grounding of the entire drive system.

Failure to follow these instructions will result in death or serious injury.

DANGER

INSUFFICIENT PROTECTION AGAINST OVERCURRENTS CAN CAUSE FIRE OR EXPLOSION

- Use properly rated overcurrent protection devices.
- Use the fuses/circuit breakers specified.
- Do not connect the product to a supply mains whose prospective short circuit current rating (current that flows during a short circuit) exceeds the specified maximum permissible value.
- When rating the upstream mains fuses and the cross sections as well as the lengths of the mains cables, take into account the minimum required prospective short-circuit current (Isc). Refer to the Upstream Protection Device section.
- If the minimum required prospective short-circuit current (Isc) is not available, apply the instructions given in the section below.

Failure to follow these instructions will result in death or serious injury.

The specified maximum permissible values and products for IEC compliance are specified in the catalog.

The specified maximum permissible values and products for UL/CSA compliance are specified in the annex provided with the drive.

- Ensure that the resistance to ground is < 100 mOhm.
- Use correct wire cross section for grounding.
- When grounding several drives, you must connect each one directly, as shown in the figure below.
- Do not loop ground cables or connect them in series.

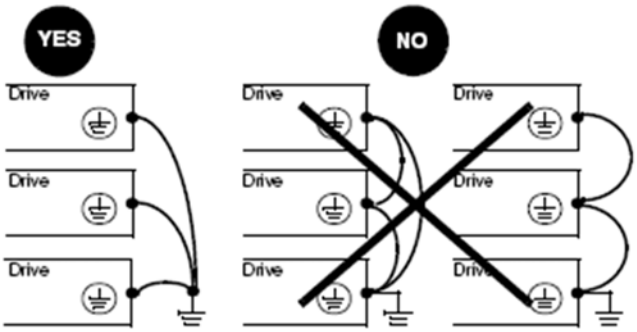

Residual Current Device

Direct current can be introduced in the protective ground conductor of this drive. If a residual current device (RCD / GFCI) or a residual current monitor (RCM) is used for additional protection against direct or indirect contact, the following specific types must be used.

⚠ WARNING

DIRECT CURRENT CAN BE INTRODUCED INTO THE PROTECTIVE GROUND CONDUCTOR

- Use a Type A Residual Current Device (RCD / GFCI) or a Residual Current Monitor (RCM) for single-phase drives connected to a phase and to the neutral conductor.
- Use a Type B Residual Current Device (RCD / GFCI) or a Residual Current Monitor (RCM) that has approval for use with frequency inverters and is sensitive to all types of current for three-phase devices and for single-phase devices not connected to a phase and the neutral conductor.

Failure to follow these instructions can result in death, serious injury, or equipment damage.

Further conditions for use of a residual current device:

- The drive has an increased leakage current at the moment power is applied. Use a residual current device (RCD / GFCI) or a residual current monitor (RCM) with a response delay.
- High-frequency currents must be filtered.

Choose a suitable model integrating:

- High frequency current filtering
- A time delay that helps to prevent a triggering of the upstream device caused by the load from stray capacitance on power-on. The time delay is not available for 30 mA device; in this case, choose devices with immunity against nuisance triggering.

Due to high leakage current in standard operation, we recommend choosing at least a 300 mA device.

If the installation requires a residual current device less than 300 mA, it can be possible to use a device lower than 300 mA by changing the IT switch position (drive sizes 1...3) or by removing the screws (drive sizes 4 and 5) according to the instructions given in the **Operation on an IT System** section *(see page 77)*.

If the installation includes several drives, provide one residual current device per drive.

Equipment Grounding

NOTICE

DESTRUCTION DUE TO INCORRECT WIRING

- Before switching on and configuring the product, verify that it is properly wired.

Failure to follow these instructions can result in equipment damage.

⚠ ⚠ DANGER

ELECTRIC SHOCK CAUSED BY INSUFFICIENT GROUNDING

- Verify compliance with all local and national electrical code requirements as well as all other applicable regulations with respect to grounding of the entire drive system.
- Ground the drive system before applying voltage.
- The cross section of the protective ground conductor must comply with the applicable standards.
- Do not use conduits as protective ground conductors; use a protective ground conductor inside the conduit.
- Do not consider cable shields to be protective ground conductors.

Failure to follow these instructions will result in death or serious injury.

Tighten the grounding screws according to the instructions given in the Ground Cables section *(see page 88)*.

Before Wiring The Frame Sizes 1...3

The packaging of these drives includes covers to be cut off and placed over the top side of the drive before wiring operations. These covers help to avoid foreign conductive parts or liquids to fall into the drive.

The example shown below is for frame size 3

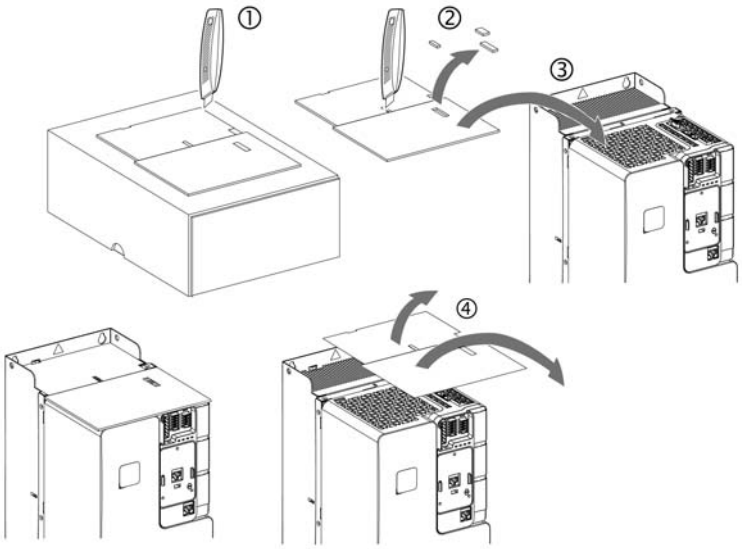

Perform the following instructions to mount the covers

Step	Action
1	Cut the covers from the packaging
2	Cut and discard the cutouts
3	Fit the covers on the drive
4	Install the drive
5	Remove top covers for normal operation

Cable Characteristics

Only use cables with insulator heat resistance of 75°C (167°F) min.

If you are using cables longer than 150 m (492 ft) between the drive and the motor, add output filters (for more details refer to the catalog).

Use a shielded cable to meet the requirements of Category C2 or C3 according to the standard IEC 61800-3, except when using a sinus filter. In this case, the use of a non-shielded motor cable is possible.

To limit the currents in common mode, use common mode output filters (ferrite) in order to reduce the circulating currents in the motor windings.

Standard linear capacity cables can be used. Use of cables with lower linear capacity could increase cable length performances.

The overvoltage limitation function **[Motor surge limit.]** SVL enables you to increase the cable length while decreasing the torque performances (refer to Programming manual). *(see page 10)*

Power Part Cables Stripping lengths

Catalog Number and Frame Size [•]		Cable Stripping Length	
		Input	Output
		mm (in.)	mm (in.)
ATV340U07N4•...U40N4•	[1]	8 ± 1 (0.32 ± 0.04)	8 ± 1 (0.32 ± 0.04)
ATV340U55N4•...U75N4	[2]	9 ± 1 (0.35 ± 0.04)	9 ± 1 (0.35 ± 0.04)
ATV340D11N4•...D22N4•	[3]	18 ± 2 (0.71 ± 0.08)	18 ± 2 (0.71 ± 0.08)
ATV340D30N4E, D37N4E	[4]	26 ± 2 (1.02 ± 0.08)	26 ± 2 (1.02 ± 0.08)
ATV340D45N4E...D75N4E	[5]	32 ± 3 (1.26 ± 0.12)	32 ± 3 (1.26 ± 0.12)

Cable Length Instructions

Long Cable Lengths Consequences

NOTE: Maximum cable length is 100 m (328 ft).

When drives are used with motors, a combination of fast switching transistors and long motor cables can even cause peak voltages up to twice the DC link voltage. This high peak voltage can cause premature aging of motor winding insulation which leads to motor breakdown.

The overvoltage limitation function will enable to increase the cable length while decreasing the torque performances.

Length Of Motor Cables

Because of the permitted mains disturbances, the allowed overvoltages at the motor, the occurring bearing currents and the permitted heat losses the distance between inverter and motor(s) is limited.

The maximum distance heavily depends on the used motors (insulation material), the type of motor cable used (shielded/unshielded), as well as the cable laying (cable channel, underground installation...).

Dynamic Voltage Load Of The Motor

Overvoltages at the motor terminals result from reflection in the motor cable. Basically the motors are stressed with measurable higher voltage peaks from a motor cable length of 10 m. With the length of the motor cable also the value of overvoltage increases.

The steep edges of the switching impulses at the output side of the frequency inverter lead to a further load of the motors. The slew rate of the voltage is typically over 5 kV/µs but it decreases with the length of the motor cable

Use a shielded cable to meet the requirements of Category C2 or C3 according to the standard IEC 61800-3.

Standard linear capacity cables can be used with Altivar Machine. Use of cables with lower linear capacity could increase cable length performances.

To reduce the voltage stress on the motor windings an overvoltage limitation function **[Motor surge limit.]** SuL can be activated when using long motor cables, within the maximum cable length of 100 m (328 ft), while decreasing the torque performances (refer to Programming manual *NVE61643*).

Corrective Actions Overview

A number of simple measures can be taken to help enhance the motor life time:

- Specification of a motor designed for speed drive applications (IEC60034-25 B or NEMA 400 should be prescribed).
- Reduce to a minimum the distance between motor and drive.
- Use unshielded cables.
  NOTE: EMC performance not guaranteed with unshielded cables
- Reduce the drive switching frequency (a reduction to 2.5 kHz is recommended.)

Additional Information

Further detailed technical information is available in the following white paper *An Improved Approach for Connecting VSD and Electric Motors* available on *www.schneider-electric.com*.

Electromagnetic Compatibility

Limit Values

This product meets the EMC requirements according to the standard IEC 61800-3 if the measures described in this manual are implemented during installation.

This product meets the EMC requirements according to the standard IEC 61800-3. If the selected composition (product itself, mains filter, other accessories and measures) does not meet the requirements of category C1, the following information applies as it appears in IEC 61800-3:

⚠ WARNING

RADIO INTERFERENCE

In a domestic environment this product may cause radio interference in which case supplementary mitigation measures may be required.

Failure to follow these instructions can result in death, serious injury, or equipment damage.

EMC requirements for the control cabinet

EMC measures	Objective
Use mounting plates with good electrical conductivity, connect large surface areas of metal parts, remove paint from contact areas.	Good conductivity due to large surface contact.
Ground the control cabinet, the control cabinet door and the mounting plate with ground straps or ground wires. The conductor cross section must be at least 10 mm^2 (AWG 8).	Reduces emissions.
Fit switching devices such as power contactors, relays or solenoid valves with interference suppression units or arc suppressors (for example, diodes, varistors, RC circuits).	Reduces mutual interference.
Install power components and control components separately.	
Install frame size 1 and 2 drives on grounded metal back plane.	Reduces emissions.

Shielded cables

EMC measures	Objective
Connect large surface areas of cable shields, use cable clamps and ground straps.	Reduces emissions.
Use cable clamps to connect a large surface area of the shields of all shielded cables to the mounting plate at the control cabinet entry.	
Ground shields of digital signal wires *(see page 70)* at both ends by connecting them to a large surface area or via conductive connector housings	Reduces interference affecting the signal wires, reduces emissions
Ground the shields of analog signal wires directly at the device (signal input); insulate the shield at the other cable end or ground it via a capacitor (for example, 10 nF, 100 V or higher.	Reduces ground loops due to low-frequency interference.
Use only shielded motor cables with copper braid and a coverage of at least 85%, ground a large surface area of the shield at both ends.	Diverts interference currents in a controlled way, reduces emissions.

Cable Installation

EMC measures	Objective
Do not route fieldbus cables and signal wires in a single cable duct together with lines with DC and AC voltages of more than 60 V. (Fieldbus cables, signal lines and analog lines may be in the same cable duct) Recommendation: Use separate cable ducts at least 20 cm apart.	Reduces mutual interference.
Keep cables as short as possible. Do not install unnecessary cable loops, use short cables from the central grounding point in the control cabinet to the external ground connection.	Reduces capacitive and inductive interference.
Use equipotential bonding conductors in the following cases: wide-area installations, different voltage supplies and installation across several buildings.	Reduces current in the cable shield, reduces emissions.
Use fine stranded equipotential bonding conductors.	Diverts high-frequency interference currents
If motor and machine are not conductively connected, for example by an insulated flange or a connection without surface contact, you must ground the motor with a ground strap or a ground wire. The conductor cross section must be at least 10 mm2 (AWG 6).	Reduces emissions, increases immunity.
Use twisted pair for the DC supply. For digital and analog inputs use shielded twisted cables with a pitch of between 25...50 mm (1...2 in).	Reduces interference affecting the signal cables, reduces emissions.

Power Supply

EMC measures	Objective
Operate product on mains with grounded neutral point.	Enables effectiveness of mains filter.
Surge arrester if there is a risk of overvoltage.	Reduces the risk of damage caused by overvoltage.

Additional measures for EMC improvement

Depending on the application, the following measures can improve the EMC-dependent values:

EMC measures	Objective
Use mains chokes	Reduces mains harmonics, prolongs product service life.
Use external mains filters	Improves the EMC limit values.
Additional EMC measures, for example mounting in a closed control cabinet with 15 dB shielding attenuation of radiated interference	

NOTE: If using an additional input filter, it should be mounted side by side to the drive and connected directly to the supply mains via an unshielded cable.

Section 4.2
General Wiring Diagrams

What Is in This Section?

This section contains the following topics:

Topic	Page
Wiring Diagrams for Frame Sizes 1...3: ATV340U07N4•...D22N4•	71
Wiring Diagrams for Frame Sizes 4 and 5: ATV340D30N4E...D75N4E	73

Wiring Diagrams for Frame Sizes 1...3: ATV340U07N4•...D22N4•

Control Block Wiring Diagram

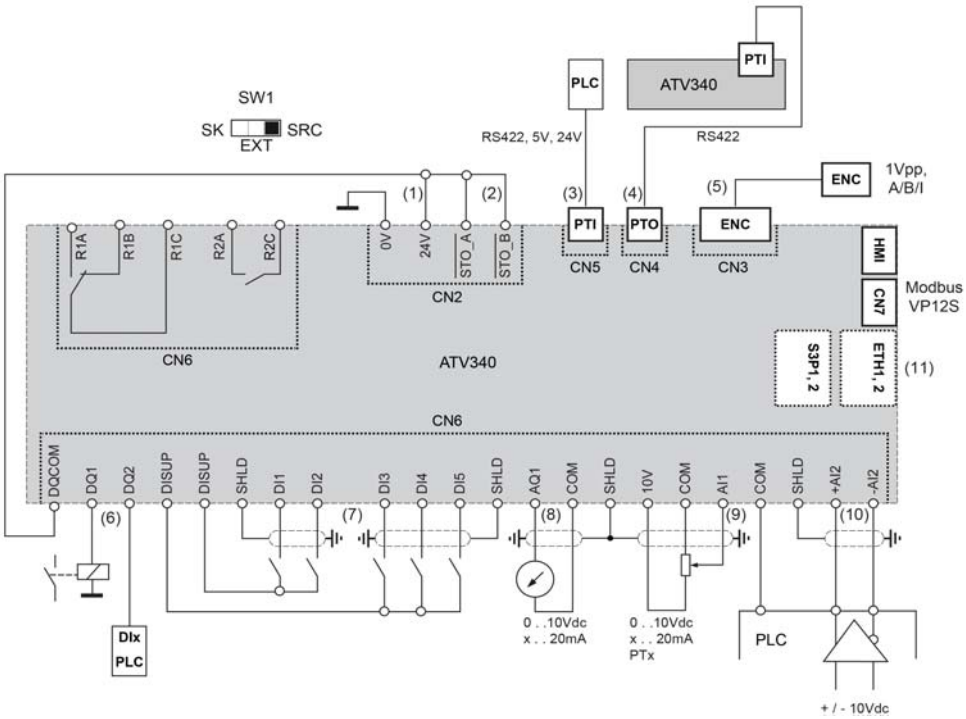

(1) 24V In, Out, maximum supply current 200 mA is provided,
(2) STO - Safe Torque Off, see ATV340 Embedded safety function manual NVE64143
(3) PTI - Pulse Train In, from external source (eg.PLC) Pulse - Direction or A-B signals can be connected
(4) PTO - Pulse Train Out, can be used to connect to a 2nd ATV340 PTI
(5) To connect a motor position feedback encoder
(6) Digital output, e.g. to connect a contactor, also usable as DI
(7) Digital inputs
(8) Analog output, e.g. to connect a meter
(9) Analog input, e.g. from potentiometer
(10) Differential analog input, e.g. as speed reference from external PLC differential, +/– 10 V
(11) 2 advanced Ethernet ports ETH1, ETH2 (ATV340••••E) or 2 Sercos III ports S3P1, S3P2 (ATV340••••S)

Three-phase Power Supply - Diagram With Line Contactor

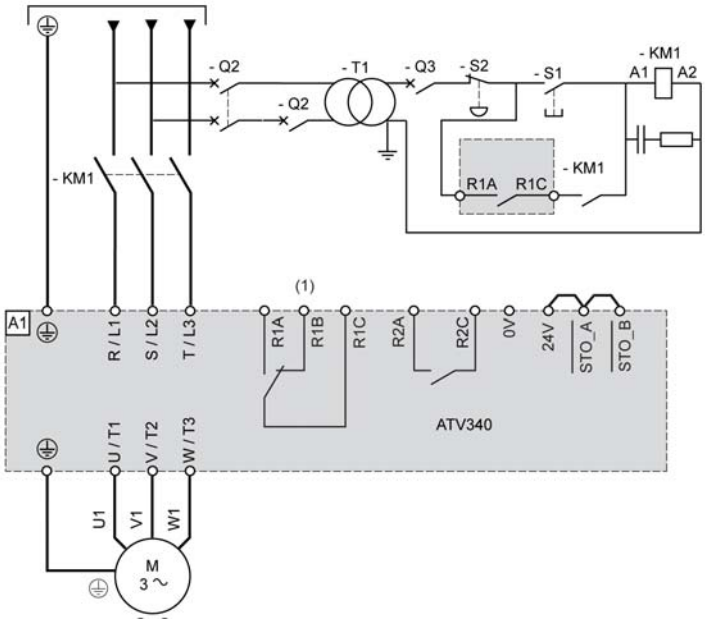

(1) Use relay output R1 set to operating state Fault to switch Off the product once an error is detected.

Three-phase Power Supply - Diagram With Downstream Contactor

If a Run command is executed while the downstream contactor between the drive and the motor is still open, there may be residual voltage at the output of the drive. This can cause an incorrect estimation of the motor speed when the contacts of the downstream contactor are closed. This incorrect estimation of the motor speed can lead to unanticipated equipment operation or to equipment damage.

In addition, there may be overvoltage at the output of the drive if the power stage is still enabled when the downstream contactor between the drive and the motor opens.

⚠ WARNING

UNANTICIPATED EQUIPMENT OPERATION OR EQUIPMENT DAMAGE

If a downstream contactor is used between the drive and the motor, verify the following:

- The contacts between the motor and the drive must be closed before a Run command is executed.
- The power stage must not be enabled when the contacts between the motor and the drive open.

Failure to follow these instructions can result in death, serious injury, or equipment damage.

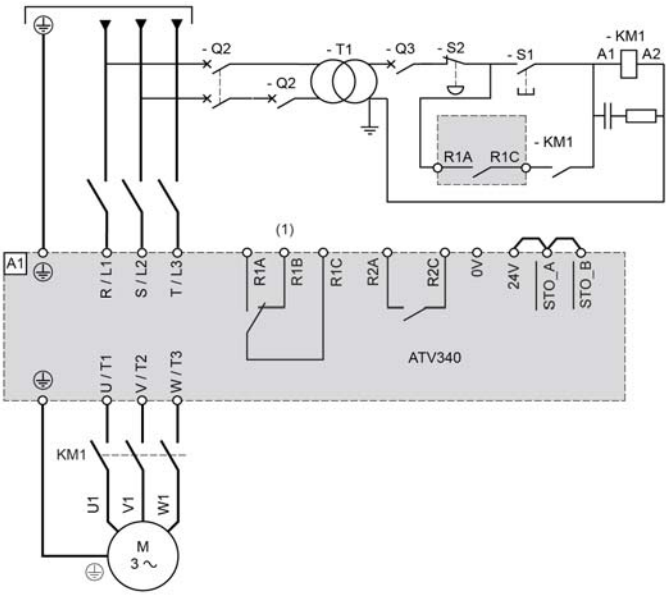

(1) Use relay output R1 set to operating state Fault to switch Off the product once an error is detected.

Safety Function STO

All details related to the STO safety function activation are given in the Embedded Safety function manual *NVE64143*.

Sensor Connection

It is possible to connect up to 3 sensors on terminal AI1.

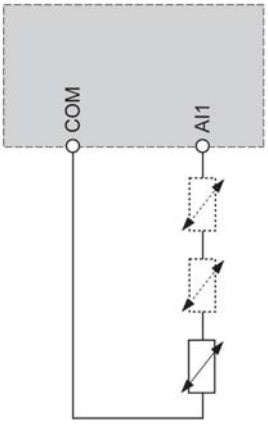

Wiring Diagrams for Frame Sizes 4 and 5: ATV340D30N4E...D75N4E

Control Block Wiring Diagram

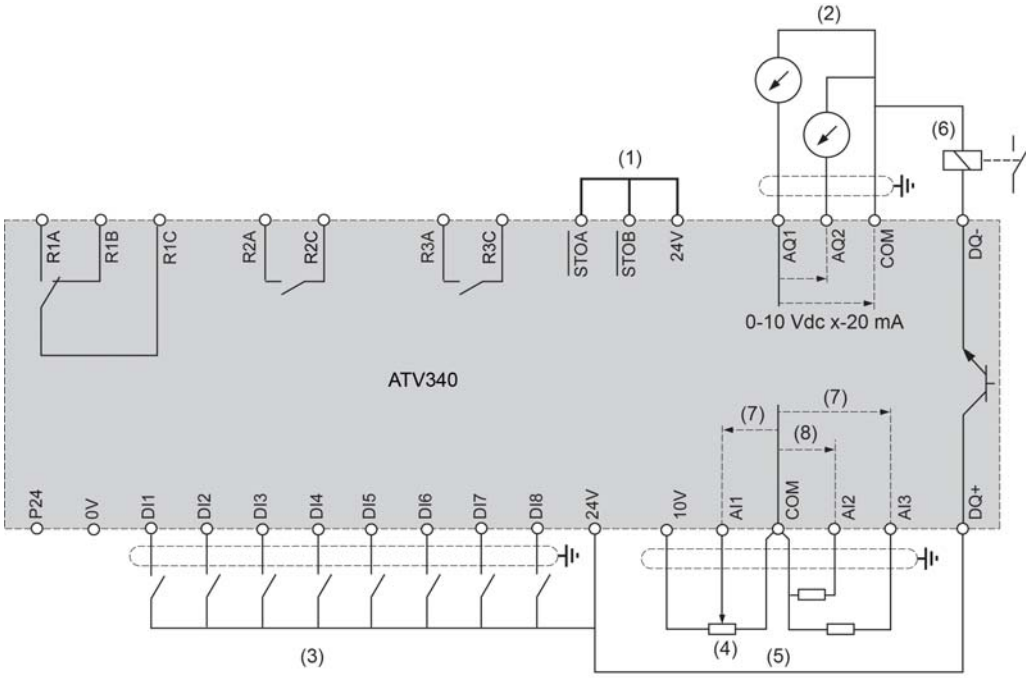

(1) STO Safe Torque Off
(2) Analog Output
(3) Digital Input - Shielding instructions are given in the Electromagnetic Compatibility section
(4) Reference potentiometer (ex. SZ1RV1002)
(5) Analog Input
(6) Digital output
(7) 0-10 Vdc, x-20 mA
(8) 0-10 Vdc, -10 Vdc...+10 Vdc

NOTE: PTI function is not available on frame sizes 4 and 5.

Three-phase Power Supply - Diagram With Line Contactor

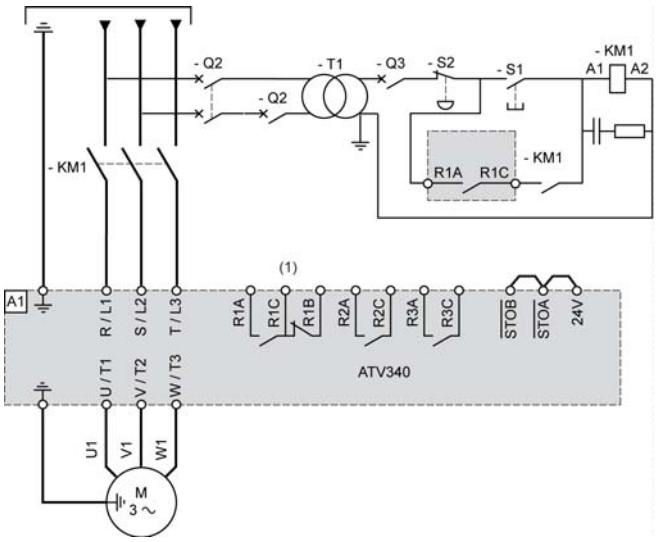

(1) Use relay output R1 set to operating state Fault to switch Off the product once an error is detected.

Three-phase Power Supply - Diagram With Downstream Contactor

If a Run command is executed while the downstream contactor between the drive and the motor is still open, there may be residual voltage at the output of the drive. This can cause an incorrect estimation of the motor speed when the contacts of the downstream contactor are closed. This incorrect estimation of the motor speed can lead to unanticipated equipment operation or to equipment damage.

In addition, there may be overvoltage at the output of the drive if the power stage is still enabled when the downstream contactor between the drive and the motor opens.

⚠ WARNING

UNANTICIPATED EQUIPMENT OPERATION OR EQUIPMENT DAMAGE

If a downstream contactor is used between the drive and the motor, verify the following:

- The contacts between the motor and the drive must be closed before a Run command is executed.
- The power stage must not be enabled when the contacts between the motor and the drive open.

Failure to follow these instructions can result in death, serious injury, or equipment damage.

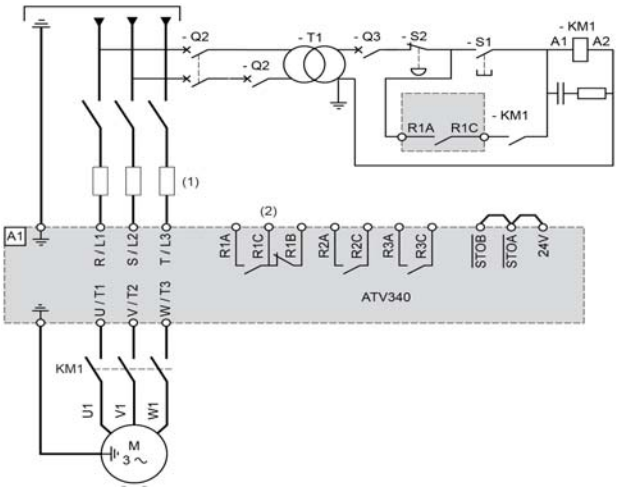

(1) Use relay output R1 set to operating state Fault to switch Off the product once an error is detected.

Safety Function STO

All details related to the STO safety function activation are given in the Embedded Safety function manual *NVE64143*.

Sensor Connection

It is possible to connect up to 3 sensors on terminals AI1/AI3.

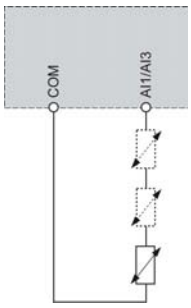

Section 4.3
Built-in EMC Filter

What Is in This Section?

This section contains the following topics:

Topic	Page
Operation on an IT System	76
Disconnecting the Built-in EMC Filter	77

Operation on an IT System

Definition

IT system: Isolated or impedance grounded neutral. Use a permanent insulation monitoring device compatible with nonlinear loads, such as an XM200 type or equivalent.

Operation

NOTICE
OVERVOLTAGE OR OVERHEATING If the drive is operated via an IT or corner grounded system, the integrated EMC filter must be disconnected as described in the present manual. **Failure to follow these instructions can result in equipment damage.**

Disconnecting the Built-in EMC Filter

Filter Disconnection

DANGER

HAZARD OF ELECTRIC SHOCK, EXPLOSION OR ARC FLASH

Read and understand the instructions in **Safety Information** chapter before performing any procedure in this chapter.

Failure to follow these instructions will result in death or serious injury.

The drives have a built-in EMC filter. As a result they exhibit leakage current to ground. If the leakage current creates compatibility problems with your installation (residual current device or other), then you can reduce the leakage current by deactivating the Y capacitors as shown below. In this configuration the product does not meet the EMC requirements according to the standard IEC 61800-3.

Setting on Frame Sizes 1 and 2

Apply the following instructions to disconnect the built-in EMC filter

Step	Action
1	The switch is **factory set** to the position as shown on detail ①
2	To disconnect the built-in EMC filter use a screwdriver to set the switch to the position shown on detail ②

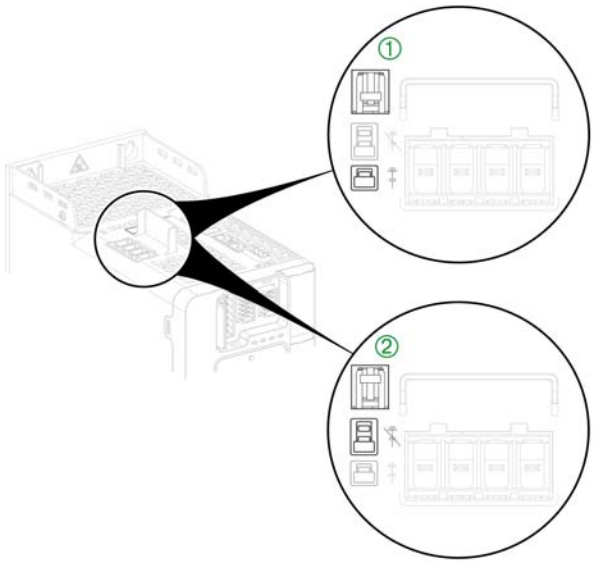

Setting on Frame Size 3

Apply the following instructions to disconnect the built-in EMC filter

Step	Action
1	Remove the front cover.
2	The switch is **factory set** to the position as shown on detail ①
3	To disconnect the built-in EMC filter use a screwdriver to set the switch to the position shown on detail ②
4	Refit the front cover.

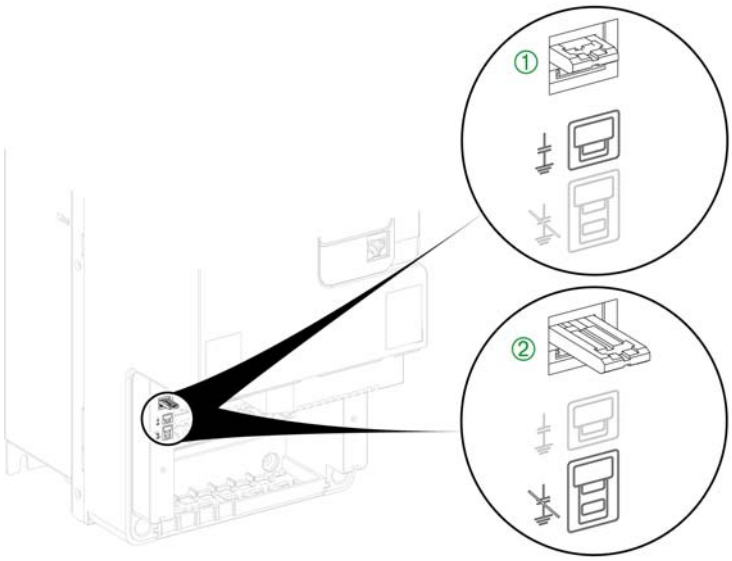

Setting on Frame Sizes 4 and 5

Apply the following instructions to disconnect the built-in EMC filter

Step	Action
1	Remove the front cover *(see page 86)*
2	The screw is **factory set** to the position as shown on detail ①
3	To disconnect the built-in EMC filter, remove the screw from its location and set it to the position as shown on detail ②
4	Refit the front cover

NOTE:
- Use only the screws supplied.
- Do not operate the drive with setting screws removed.

Setting on Frame Size 4, 200...240 V Products

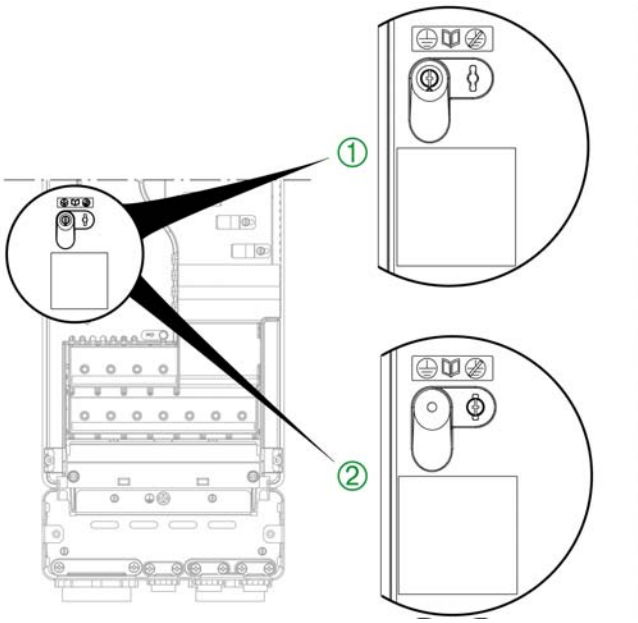

Setting on Frame Size 4, 380...480 V Products

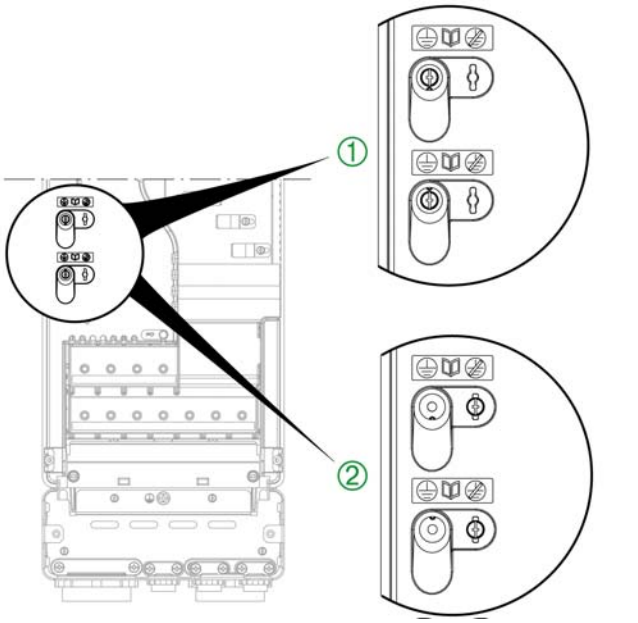

Setting on Frame Size 5 Products

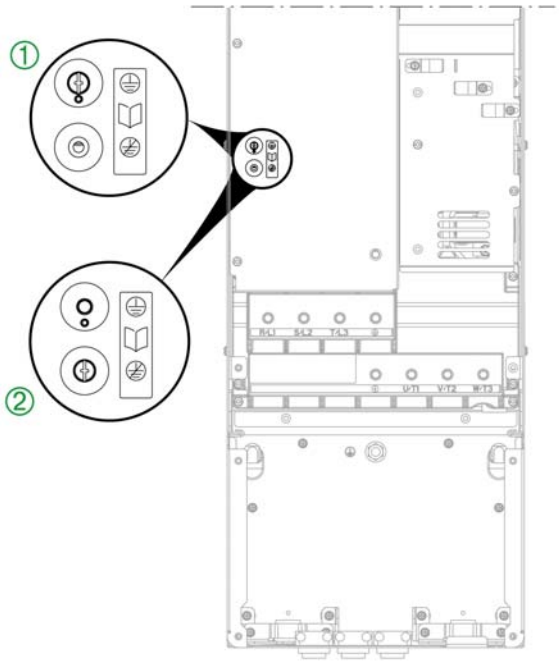

Section 4.4
Power Part

What Is in This Section?

This section contains the following topics:

Topic	Page
Wiring the Power Part	82
Characteristics of the Power Part Terminals	88

Wiring the Power Part

DANGER

HAZARD OF ELECTRIC SHOCK, EXPLOSION OR ARC FLASH

Verify that the cables are properly installed as specified in the Characteristics of the Power Part Terminals section.

Failure to follow these instructions will result in death or serious injury.

Power Terminals Arrangement for Frame Sizes 1...2

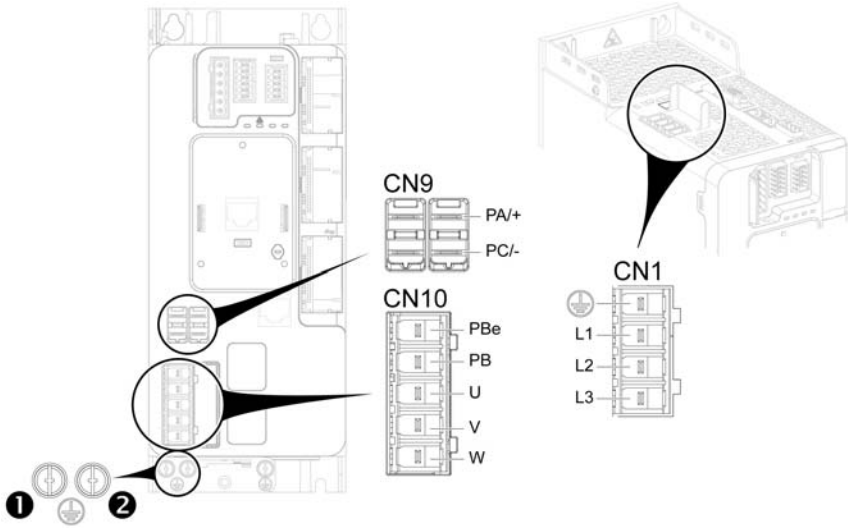

Functions of the Power Terminals

Terminal	Connector (on frame sizes 1...2)	Function
L3/T - L2/S - L1/R - ⏚	CN1	Mains supply and Input ground terminal
PA/+	CN9	DC bus + polarity
PC/-	CN9	DC bus - polarity
W/T3 - V/T2 - U/T1 - PB - PBe	CN10	Output motor connection W/T3 - V/T2 - U/T1, output to braking resistor (1) PB - PBe
⏚		Output ground terminal ❶ and braking resistor ground terminal ❷
(1) For further information about the braking resistor option, please refer to the catalog on www.schneider-electric.com.		

Additional PE Ground Terminal Connection

Connect the additional PE ground terminal of the device to the central grounding point of the system.

Additional PE ground terminal location on frame sizes 1 and 2

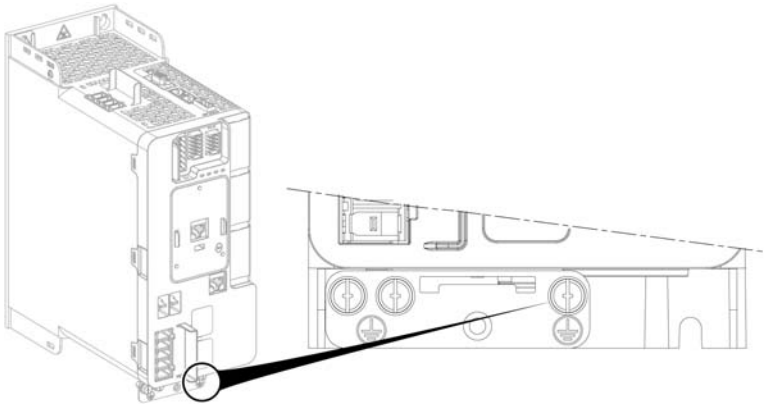

Access To The Terminals For Frame Size 3

⚠ ⚠ DANGER

HAZARD OF ELECTRIC SHOCK, EXPLOSION OR ARC FLASH

Read and understand the instructions in **Safety Information** chapter before performing any procedure in this chapter.

Failure to follow these instructions will result in death or serious injury.

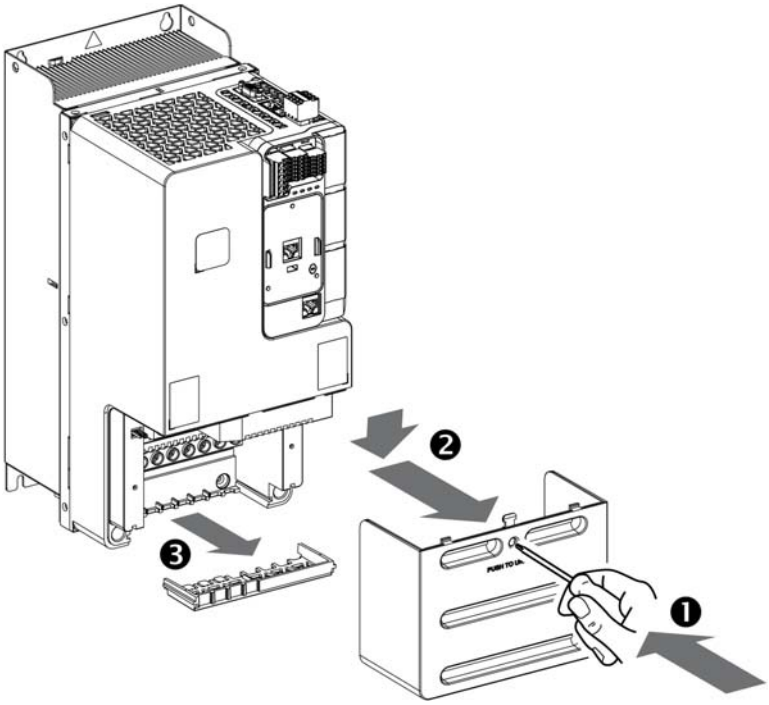

Apply the following instructions to access the terminals on **frame size 3** drives

Step	Action
1	Using a screwdriver, push to unlock the cover
2	Remove the front cover
3	Remove the wiring trap

Power Terminals Arrangement for Frame Size 3

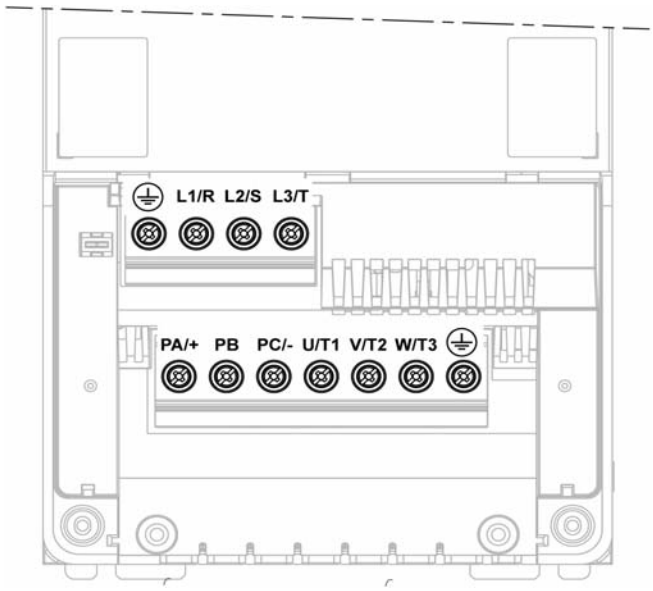

Additional PE Ground Terminal Connection

Connect the ground terminal of the device to the central grounding point of the system.

Additional PE ground terminal location on frame sizes 3

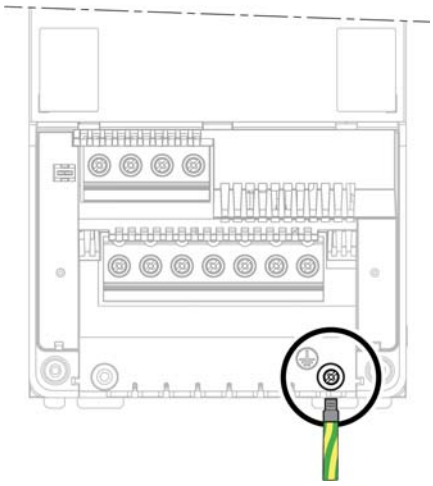

Use the special ring tongue cable end.

Power Cables Routing

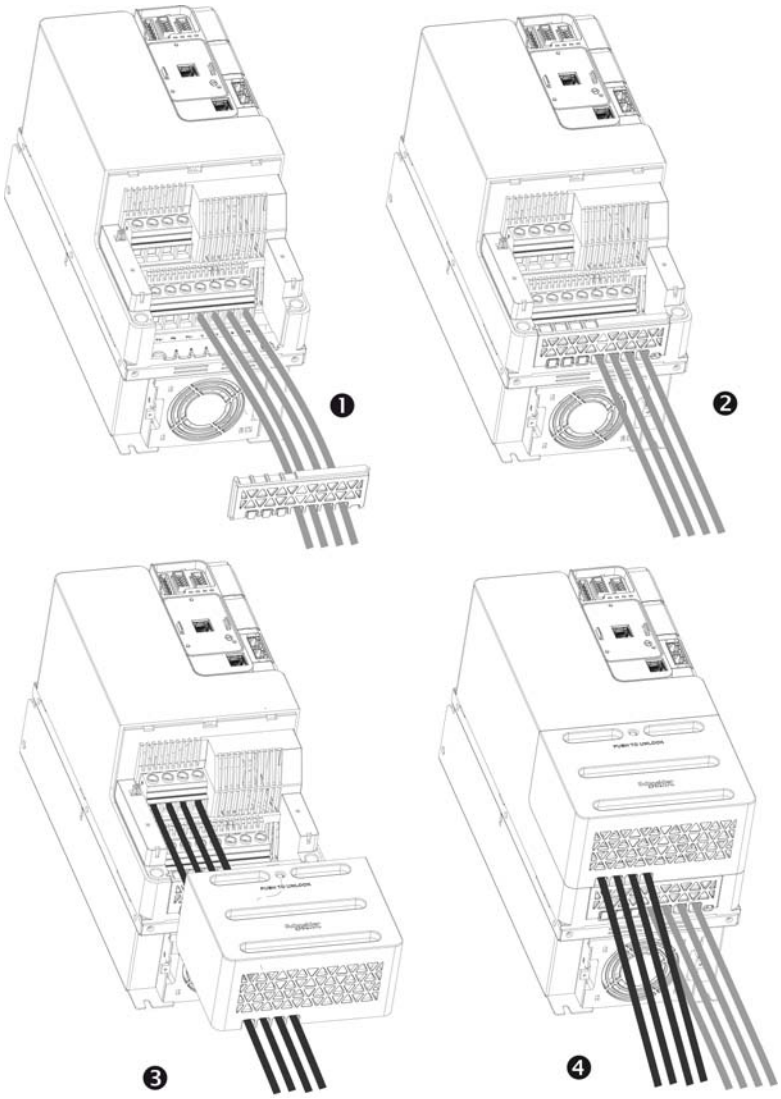

Perform the following instructions

Step	Action
1	Attach and route the motor cable
2	Refit the wiring trap
3	Attach and route the mains cable
4	Refit the power cover

Power Cables Attaching

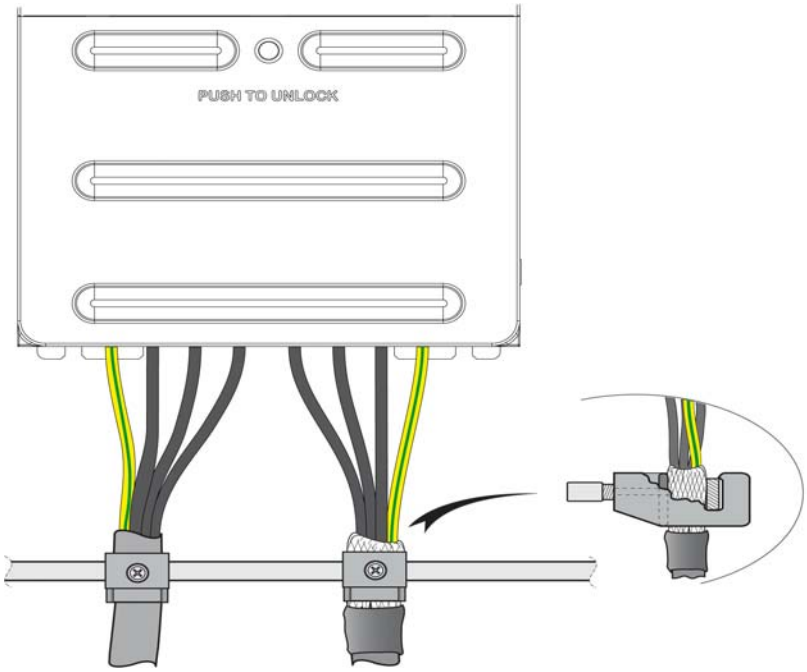

Access To The Terminals For Frame Sizes 4 and 5

DANGER

HAZARD OF ELECTRIC SHOCK, EXPLOSION OR ARC FLASH

Read and understand the instructions in **Safety Information** chapter before performing any procedure in this chapter.

Failure to follow these instructions will result in death or serious injury.

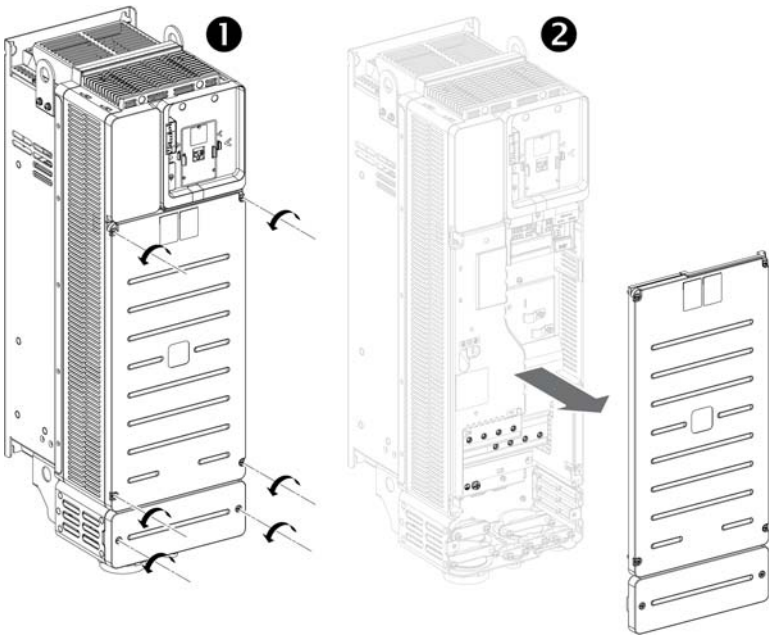

Apply the following instructions to access the terminals on **frame sizes 4 and 5** drives

Step	Action
1	Unscrew the 6 screws attaching the housing
2	Remove the front covers

Additional PE Ground Terminal Connection

Connect the ground terminal of the device to the central grounding point of the system.

Additional PE ground terminal location on frame sizes 4 and 5

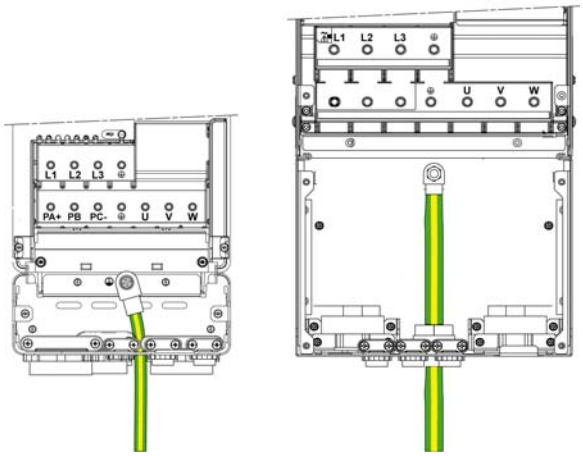

Power Terminals Arrangement for Frame Size 4 and 5 and Cable Path

Wire the power cables as shown below.

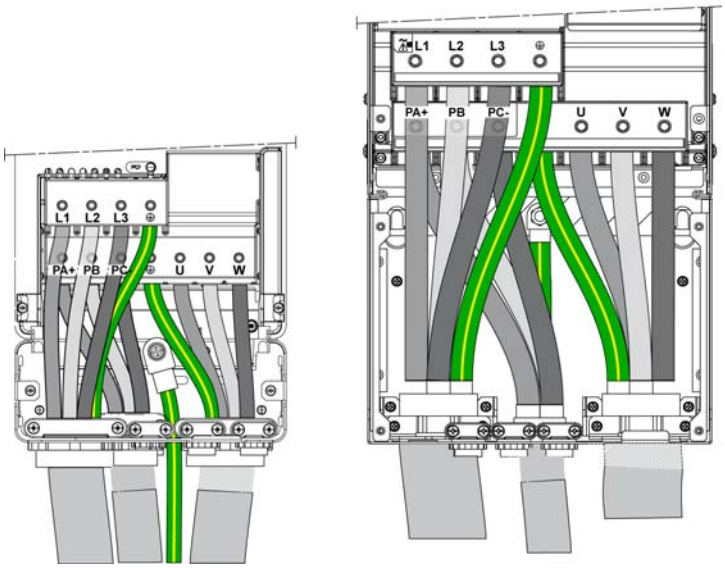

Characteristics of the Power Part Terminals

Description of the Power Terminals

Terminal	Function
PE or ⏚	Ground connection terminal
R/L1 S/L2 T/L3	AC supply mains
PA/+	Output to braking resistor (DC bus + polarity)
PB (if any)	Output to braking resistor
PC/-	DC bus - polarity
U/T1 V/T2 W/T3	Outputs to the motor

Additional PE Ground Connection Cables

Ground cable cross sections of input and output ground cables are the same as those given for the input and output cables. These cross sections and related tightening torques are given in the tables below. Due to high leakage currents an additional PE connection must be wired.

Minimum cross section of protective ground cable is 10 mm^2 (AWG 8) for CU cable and 16 mm^2 (AWG 6) for AL cable.

Frame Size 1

Supply and Output Terminals

ATV340	Supply Terminals (L1, L2, L3, PE) CN1 Connector			Output Terminals (U, V, W, PB, PBe) CN10 Connector		
	Wire Cross Section		Tightening Torque	Wire Cross Section		Tightening Torque
	Minimum (*)	Maximum (**)	Rated	Minimum (*)	Maximum (**)	Rated
	mm² (AWG)	mm² (AWG)	N·m (lb.in)	mm² (AWG)	mm² (AWG)	N·m (lb.in)
U07N4•, U15N4•, U22N4•, U30N4•, U40N4•	1.5 (14)	4 (12)	0.69 (6.1)	1.5 (14)	4 (12)	0.69 (6.1)
(*) Minimum cross section of the terminal at rated conditions (**) Maximum cross section of the terminal Only use cables with solid wires or rigid stranded wires.						

DC Bus Terminals

ATV340	DC Bus Terminals (PA/+, PC/-) CN9 connector	
	Wire Cross Section	
	Minimum (*)	Maximum (**)
	mm² (AWG)	mm² (AWG)
U07N4•, U15N4•, U22N4•, U30N4•, U40N4•	4 (12)	6 (10)
(*) Minimum cross section of the terminal at rated conditions (**) Maximum cross section of the terminal Only use cables with solid wires or rigid stranded wires.		

Tightening torques of additional PE:

- Upper ground connection: 2.6 N·m (23.01 lb.in) - CN1 connector
- Lower ground connection: 0.69 N·m (6.1 lb.in) - CN10 connector

Frame Size 2

Supply and Output Terminals

ATV340	Supply Terminals (L1, L2, L3, PE) CN1 Connector			Output Terminals (U, V, W, PB, PBe) CN10 Connector		
	Wire Cross Section		Tightening Torque	Wire Cross Section		Tightening Torque
	Minimum (*)	Maximum (**)	Rated	Minimum (*)	Maximum (**)	Rated
	mm² (AWG)	mm² (AWG)	N·m (lb.in)	mm² (AWG)	mm² (AWG)	N·m (lb.in)
U55N4•	1.5 (14)	6 (10)	1.8 (16)	1.5 (14)	6 (10)	1.8 (16)
U75N4•	2.5 (12)	6 (10)	1.8 (16)	1.5 (14)	6 (10)	1.8 (16)
(*) Minimum cross section of the terminal at rated conditions (**) Maximum cross section of the terminal Only use cables with solid wires or rigid stranded wires.						

DC Bus Terminals

ATV340	DC Bus Terminals (PA/+, PC/-) CN9 connector	
	Wire Cross Section	
	Minimum (*)	Maximum (**)
	mm² (AWG)	mm² (AWG)
U55N4•, U75N4•	4 (12)	6 (10)
(*) Minimum cross section of the terminal at rated conditions (**) Maximum cross section of the terminal Only use cables with solid wires or rigid stranded wires.		

Tightening torques of additional PE:

- Upper ground connection: 2.6 N·m (23.01 lb.in) - CN1 connector
- Lower ground connection: 0.69 N·m (6.1 lb.in) - CN10 connector

Frame Size 3

Supply and Output Terminals

ATV340	Supply Terminals (L1, L2, L3, PE) CN1 Connector			Output Terminals (U, V, W, PE) CN10 Connector		
	Wire Cross Section		Tightening Torque	Wire Cross Section		Tightening Torque
	Minimum (*)	Maximum (**)	Rated	Minimum (*)	Maximum (**)	Rated
	mm² (AWG)	mm² (AWG)	N·m (lb.in)	mm² (AWG)	mm² (AWG)	N·m (lb.in)
D11N4•	4 (10)	25 (3)	3.8 (33.6)	2.5 (12)	25 (3)	3.8 (33.6)
D15N4•	6 (8)	25 (3)	3.8 (33.6)	4 (10)	25 (3)	3.8 (33.6)
D18N4•	10 (8)	25 (3)	3.8 (33.6)	6 (8)	25 (3)	3.8 (33.6)
D22N4•	10 (6)	25 (3)	3.8 (33.6)	6 (8)	25 (3)	3.8 (33.6)
(*) Minimum cross section of the terminal at rated conditions (**) Maximum cross section of the terminal Only use cables with solid wires or rigid stranded wires.						

DC Bus and Braking Resistor Terminals

ATV340	DC Bus Terminals (PA/+, PC/-) CN9 Connector and PB CN8 Connector		
	Wire Cross Section		Tightening Torque
	Minimum (*)	Maximum (**)	Rated
	mm² (AWG)	mm² (AWG)	N·m (lb.in)
D11N4•	4 (10)	25 (3)	3.8 (33.6)
D15N4•	6 (8)	25 (3)	3.8 (33.6)
D18N4•	10 (8)	25 (3)	3.8 (33.6)
D22N4•	10 (6)	25 (3)	3.8 (33.6)
(*) Minimum cross section of the terminal at rated conditions (**) Maximum cross section of the terminal Only use cables with solid wires or rigid stranded wires.			

Tightening torques of additional PE:
- Upper ground connection: 2.6 N·m (23.01 lb.in) - CN1 connector
- Lower ground connection: 0.69 N·m (6.1 lb.in) - CN10 connector

Frame Size 4

Supply and Output Terminals

ATV340	Supply Terminals (L1, L2, L3, PE)			Output Terminals (U, V, W, PE)		
	Wire Cross Section		Tightening Torque	Wire Cross Section		Tightening Torque
	Minimum (*)	Maximum (**)	Rated	Minimum (*)	Maximum (**)	Rated
	mm² (AWG)	mm² (AWG)	N·m (lb.in)	mm² (AWG)	mm² (AWG)	N·m (lb.in)
D30N4E	35 (3)	50 (1)	12 (106.2)	35 (3)	50 (1)	12 (106.2)
D37N4E	35 (2)	50 (1)	12 (106.2)	50 (1)	50 (1)	12 (106.2)
(*) Minimum cross section of the terminal at rated conditions (**) Maximum cross section of the terminal Only use cables with rigid stranded wires.						

DC Bus and Braking Resistor Terminals

ATV340	DC Bus Terminals (PA/+, PB, PC/-)		
	Wire Cross Section		Tightening Torque
	Minimum (*)	Maximum (**)	Rated
	mm² (AWG)	mm² (AWG)	N·m (lb.in)
D30N4	25 (4)	50 (1)	12 (106.2)
D37N4E	35 (3)	50 (1)	12 (106.2)
(*) Minimum cross section of the terminal at rated conditions (**) Maximum cross section of the terminal Only use cables with rigid stranded wires.			

Tightening torque of additional PE: 5 N·m (44.2 lb.in)

Frame Size 5

Supply and Output Terminals

ATV340	Supply Terminals (L1, L2, L3, PE)			Output Terminals (U, V, W, PE)		
	Wire Cross Section		Tightening Torque	Wire Cross Section		Tightening Torque
	Minimum (*)	Maximum (**)	Min. to Maximum	Minimum (*)	Maximum (**)	Rated
	mm² (AWG)	mm² (AWG)	N·m (lb.in)	mm² (AWG)	mm² (AWG)	N·m (lb.in)
D45N4E	70 (1/0)	120 (250MCM)	25 (221.3)	70 (1/0)	120 (250MCM)	25 (221.3)
D55N4E	95 (3/0)	120 (250MCM)	25 (221.3)	95 (3/0)	120 (250MCM)	25 (221.3)
D75N4E	120 (4/0)	120 (250MCM)	25 (221.3)	120 (250MCM)	120 (250MCM)	25 (221.3)

(*) Minimum cross section of the terminal at rated conditions
(**) Maximum cross section of the terminal

Only use cables with rigid stranded wires.

DC Bus and Braking Resistor Terminals

ATV340	DC Bus Terminals (PA/+, PB, PC/-)		
	Wire Cross Section		Tightening Torque
	Minimum (*)	Maximum (**)	Rated
	mm² (AWG)	mm² (AWG)	N·m (lb.in)
D45N4E, D55N4E	70 (1/0)	120 (250MCM)	25 (221.3)
D75N4E	95 (3/0)	120 (250MCM)	25 (221.3)

(*) Minimum cross section of the terminal at rated conditions
(**) Maximum cross section of the terminal

Only use cables with rigid stranded wires.

Tightening torque of additional PE: 10 N·m (88.5 lb.in)

Section 4.5
Control Part

What Is in This Section?

This section contains the following topics:

Topic	Page
Arrangement and Characteristics of Control Block Terminals, Communication and I/O Ports	93
Control Terminals Electrical Data for Frame Sizes 1...3	97
Control Terminals Electrical data for Frame Sizes 4 and 5	108
Wiring The Control Part of Frame Sizes 4 and 5	112
Product LEDs	120

Arrangement and Characteristics of Control Block Terminals, Communication and I/O Ports

Front Control Terminals - Drive Frame Sizes 1...3

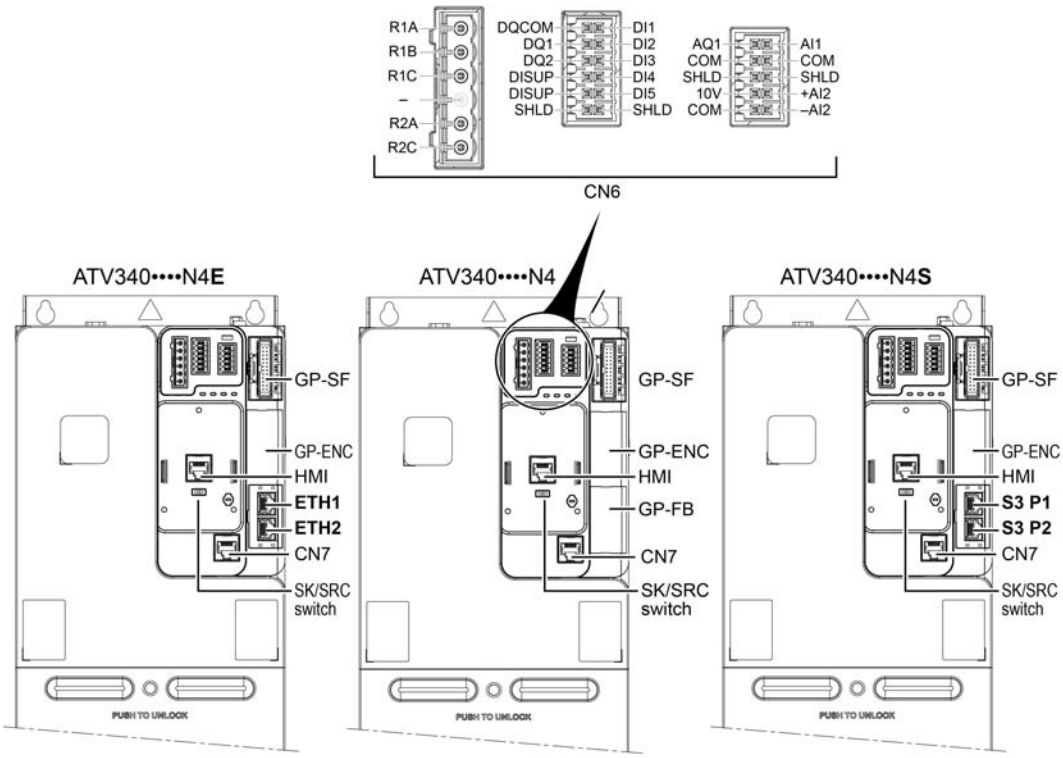

Connector / Switch	Description
GP-SF	Slot for safety and general purpose modules like I/O, Relay
GP-ENC	Slot for encoder module. Use only VW3A3420, VW3A3422, VW3A3423 modules and general purpose modules like I/O, Relay
HMI	RJ45 port for Plain Text Display Terminal (VW3A1113) direct plug-in or Graphic Display Terminal (VW3A1111) to connect with a cable *(see page 20)*
ETH1, ETH2	2 x RJ45 Advanced Ethernet ports, on ATV340•••••**E**
S3 P1, S3 P2	2 x RJ45 Embedded Sercos III ports, on ATV340•••••**S**
GP-FB	Slot for fieldbus and general purpose modules like IO, Relay
CN7	Modbus VP12S port *(see page 107)*
SK/EXT/SRC switch	Sink-Source switch *(see page 123)*
CN6	Analog and digital I/O, relay outputs... *(see page 104)*

Top Control Terminals Location on Drive Frame Sizes 1...3

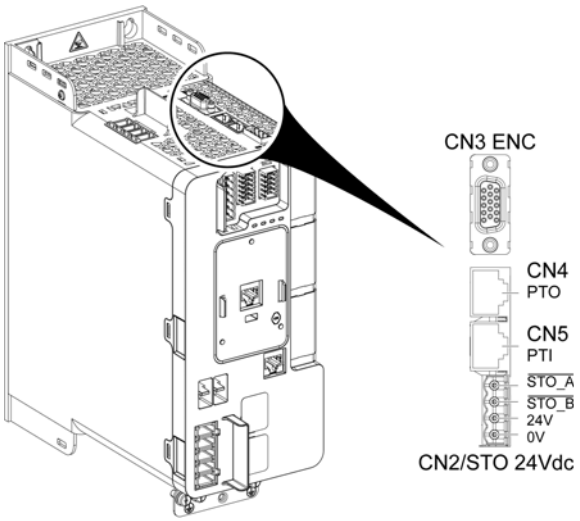

Connector / Switch	Description
CN3 ENC	Embedded encoder *(see page 99)* **NOTE:** An additional clearance is required on top of the drive when using the embedded encoder.
CN4	PTO (Pulse Train Output) *(see page 101)*
CN5	PTI (Pulse Train Input) *(see page 101)*
CN2/STO 24Vdc	STO (Safe Torque Off) *(see page 98)*

Wiring Characteristics - Drive Frame Sizes 1...3

Wire cross sections and tightening torques. Cross section values are with ferrule.

Control Terminals	Relay Output Wire Cross Section		Other Wire Cross Section		Tightening Torque Rnx
	Minimum (1)	Maximum	Minimum (1)	Maximum	
	mm² (AWG)	mm² (AWG)	mm² (AWG)	mm² (AWG)	N•m (lb.in)
CN6 terminals	0.25 (24)	2.5 (14)	0.25 (24)	1 (16)	0.5 (4.4)

(1) The value corresponds to the minimum permissible cross section of the terminal.

NOTE: Control Terminal Electrical data. *(see page 97)*

Control Terminals - Drive Frame Sizes 4 and 5

The control block terminals are the same for drive frame sizes 4 and 5.

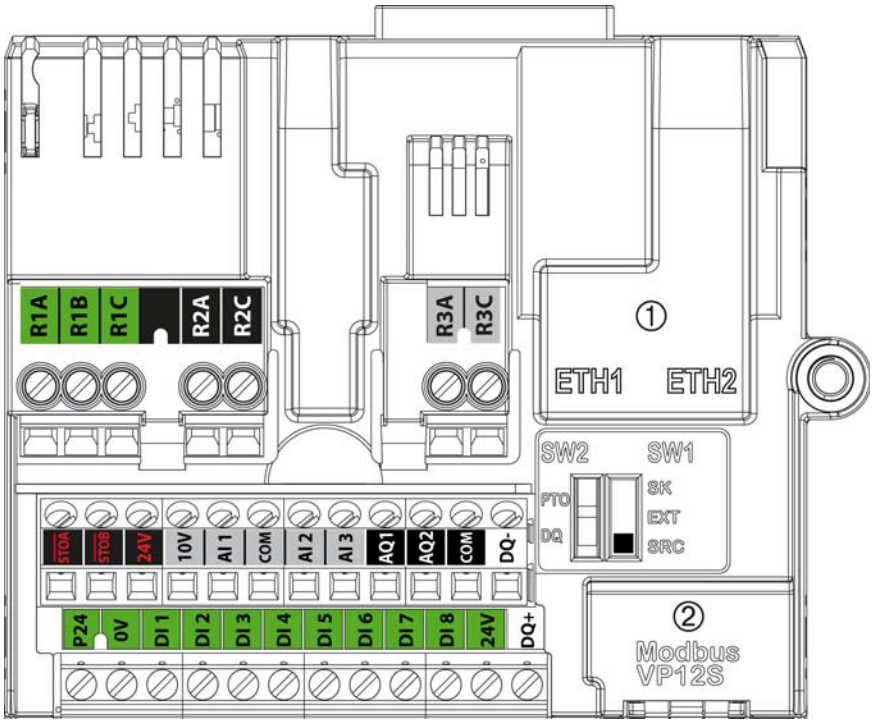

① Ethernet Modbus TCP, ② Serial Modbus

NOTE: Modbus VP12S: This is the standard Modbus serial link marking. VP•S means connector with power supply, where 12 stands for the 12 Vdc supply voltage.

Wiring Characteristics

Wire cross sections and tightening torques

Control Terminals	Relay Output Wire Cross Section		Other Wire Cross Section		Tightening Torque
	Minimum (1)	Maximum	Minimum (1)	Maximum	
	mm² (AWG)	mm² (AWG)	mm² (AWG)	mm² (AWG)	N•m (lb.in)
All terminals	0.75 (18)	1.5 (16)	0.5 (2.0)	1.5 (16)	0.5 (4.4)

(1) The value corresponds to the minimum permissible cross section of the terminal.

NOTE: Control Terminal Electrical data. *(see page 97)*

Control Block Ports

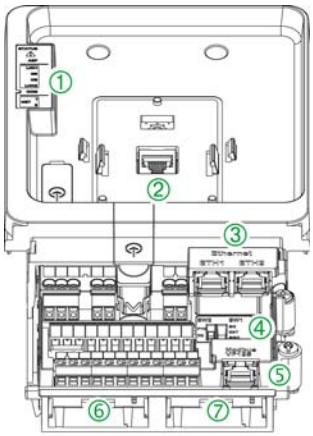

Legend

Marking	Description
①	Drive status LEDs *(see page 120)*
②	RJ45 port to plug directly a plain text display terminal or using a a cable to connect a Graphic display terminal
③	2 x RJ45 ports: ETH1 and ETH2 for Ethernet embedded
④	SK-EXT-SRC switch SW1 *(see page 123)* PTO-DQ switch SW2 *(see page 126)*
⑤	RJ45 port for Modbus embedded
⑥	Slot B, for encoder interface, and GP (general purpose) modules like I/O, Relay...
⑦	Slot A, for fieldbus communication and GP (general purpose) modules like I/O, Relay,..

Optional Module Installation and Wiring

NOTE:
- For possible fieldbus module list, refer to the catalog *(see page 10)*
- For fieldbus modules information, refer to the instruction sheet *S1A45591* available on *www.schneider-electric.com*

RJ45 Communication ports

The control block includes 4 RJ45 ports.

They allow to connect a:
- PC
  - Using a commissioning software (SoMove, SoMachine...), to configure and monitor the drive
  - To access the drive webserver
- SCADA system
- PLC system
- Graphic Display terminal, using Modbus protocol
- Modbus fieldbus

Connection is also possible using optional:
- Bluetooth
- Wi-Fi dongle
- USB/Modbus converter

NOTE:
- Verify that RJ45 cable is not damaged prior to connect it to the product otherwise the power supply of the control could be lost.
- Do not plug Ethernet or Sercos III cable in Modbus plug or vice versa.
- Do not plug PTI, PTO interface cable to Ethernet, Sercos III or Modbus plugs or vice versa.
- Use different cable colors for Ethernet, Sercos III, Modbus, PTI or PTO to facilitate Fast Device Replacing operations.
- Verify the correct wiring of the drive before to switch the system on.

Control Terminals Electrical Data for Frame Sizes 1...3

Preliminary Steps

⚠ ⚠ DANGER

HAZARD OF ELECTRIC SHOCK, EXPLOSION OR ARC FLASH

Read and understand the instructions in **Safety Information** chapter before performing any procedure in this chapter.

Failure to follow these instructions will result in death or serious injury.

Unsuitable settings or unsuitable data or unsuitable wiring may trigger unintended movements, trigger signals, damage parts and disable monitoring functions.

⚠ WARNING

UNANTICIPATED EQUIPMENT OPERATION

- Only start the system if there are no persons or obstructions in the zone of operation.
- Verify that a functioning emergency stop push-button is within reach of all persons involved in the operation.
- Do not operate the drive system with unknown settings or data.
- Verify that the wiring is appropriate for the settings.
- Never modify a parameter unless you fully understand the parameter and all effects of the modification.
- When commissioning, carefully run tests for all operating states, operating conditions and potential error situations.
- Anticipate movements in unintended directions or oscillation of the motor.

Failure to follow these instructions can result in death, serious injury, or equipment damage.

General

This section provides technical data relating to control terminals on frame sizes 1...3. The control terminals electrical data are different for frame sizes 1,2,3 and frame sizes 4 and 5 *(see page 108)*.

NOTE:

- For a description of the terminal arrangement, refer to Arrangement and Characteristics of Control Terminals and Communication And I/O Ports *(see page 93)*
- For factory setting I/O assignment, refer to the Programming manual *(see page 10)* available on *www.schneider-electric.com*.
- For all LEDs description, refer to the Product LEDs section *(see page 120)* or to the Programming manual *(see page 10)* available on *www.schneider-electric.com*.

Drive Frame Sizes 1...3 - Top Side CN2 Connector

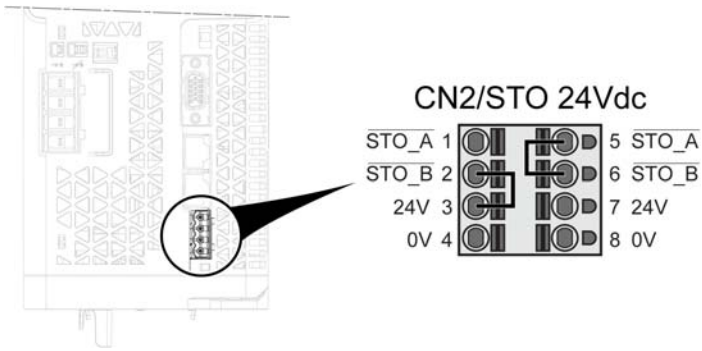

Alternative connection: wiring from drive to drive

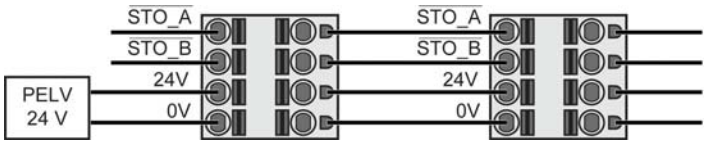

Terminal	Description	I/O Type	Electrical characteristics
$\overline{\text{STO_A}}$, $\overline{\text{STO_B}}$	STO inputs, SIL3	I	**Safety Function STO Inputs** Refer to the Embedded Safety Function Manual (*NVE64143*) available on *www.schneider-electric.com*
24V	Output: power supply for digital inputs and safety function STO inputs Input: external 24 V supply of control	I/O	● Current maximum input: 1 A ● +24 Vdc ● Tolerance: minimum 20.4 Vdc, maximum 27 Vdc ● Current: maximum output: 200 mA ● Terminal protected against overload and short-circuit ● 24V output can be disabled by menu **[24 V Supply Output]** S24V to avoid possible 24 Vdc bus supply of other loads. By default 24 Vdc supply enabled. The external +24 Vdc controller supply must meet the requirements of IEC 61131-2 (PELV standard power supply unit).
0V	Reference for 24 V supply		

Drive Frame Sizes 1...3 - Top Side CN3 Connector

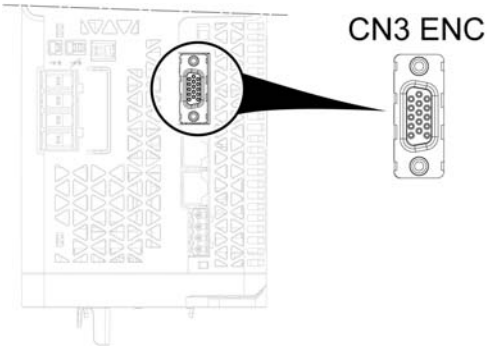

Terminal	Description	I/O Type	Electrical characteristics
ENC	Embedded Encoder	I/O	SUB-HD-15 female ● Digital encoder 5V RS422 A/B/I ● Analog encoder 1Vpp sin/cos Encoder supply: ● +5 V (max. 10 m), 250 mA ● +12 V, 100 mA ● +24 V, 100 mA ● Thermal sensor input PTx

Connector type: The encoder interface is realized with a female high density 15-pin Sub-HD connector. Screw lock thread 4-40 UNC

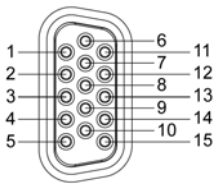

Pin signal, function and electrical characteristics

Pin	Signal name	Function/Meaning	Electrical Characteristics
1	DATA_A+	Data channel A	RS422/RS485, Rin 121 Ohm, 1 Mbit max.
2	DATA_A-		
3	ENC+24V_OUT	Encoder Supply 24 Vdc	+24 Vdc / 100mA
4	DATA_I+	Data channel I	RS422/RS485, Rin 121Ohm, 1 MBit max.
5	DATA_I-		
6	SIN	Sine analog input	1 Vpp, 100 kHz max.
7	ENC+12V_OUT	Encoder Supply 12 Vdc	+12 Vdc / 100mA
8	ENC_0V	Reference potential for encoder supply or Reference for Temperature sense	-
9	TEMP_SENSE	Temperature sensor input	Supported sensor: PTC, Klixon
10	DATA_B+	Data channel B	RS422/RS485, Rin 121 Ohm, 1 Mbit max.
11	DATA_B-		
12	COS	Cosinus analog input	1Vpp, 100 kHz max.
13	REFCOS	Reference for Cosinus	1Vpp, 100 kHz max.
14	REFSIN	Reference for Sinus analog input	1Vpp, 100 kHz max.
15	ENC+5V_OUT	Encoder Supply 5 Vdc	+5 Vdc / 250 mA
Shield		Overall cable shielding for signal lines	The shield is connected in the connector via the housing.

Cable characteristics

Pin	Twisted Wire pair digital	Twisted Wire pair analog	ABI	sin/cos 1 Vpp	I/O
1	1	NC	R	-	I/O
2					
3	4a *	4a *	-	-	O
4	3	NC	R	-	I
5					
6	NC	2	-	R	O
7	4b *	4b *	-	-	O
8	4 or 5	4 or 5	R	R	
9	5	5	Opt.	Opt.	I
10	2	NC	R	-	I
11					
12	NC	3	-	R	-
13					
14	NC	2	-	R	O
15	4c *	4c *	-	-	O
Shield			R	R	

***:** Wired depending on selected supply voltage
R: Required
-: Not required
Opt.: Optional

Special Features:
- Wire break detection on DATA_A and DATA_B channel
- Safety: SIL1 (SC SIL2)

NOTE:
- Cable connector needs to be screwed to CN3 Encoder interface and cable must be maintained on cabinet backplane and drive top
- If you add an option module, verify the wiring diagram which is different between the CN3 connector and the Analog Encoder module (*VW3A3422*), or the Digital Encoder module (*VW3A3420*).

Cable connection tips:
- Before connecting the encoder cable check carefully the wiring against above signal table and ensure that there are no short circuits between signals
- For 24V encoder supply activation see the parameter **[24 V Supply Output]** 524V described in the Programming manual *(see page 10)* available on *www.schneider-electric.com*
- For good EMC performance and connection reliability under vibration ensure proper assembly of encoder connector to CN3 interface by UNC screw fixing
- Encoder cable needs to be maintained on top of drive (use cable tie fixation on plastic fin) or cabinet backplane for strain relief

Maximum cable length according to encoder supply:
- 12 Vdc / 24 Vdc: 100 m (328 ft)
- 5 Vdc: 10 m (32 ft)

Recommended encoder cable:
- Encoder cable 100 m (328 ft), ends open, catalog number *VW3M8221R1000*
  - 1 x 2 x 0.5 mm² (AWG20) for supply line
  - 5 x 2 x 0.25 mm² (AWG26) for signal and sensor lines

Drive Frame Sizes 1...3 - Top Side CN4 Connector

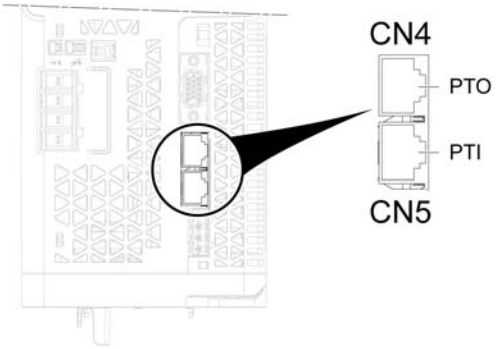

Terminal	Description	I/O Type	Electrical characteristics
PTO	Pulse train output	O	5 Vdc differential RS422 signals ● Logic level as per RS422 ● Output frequency per signal ≤ 500 kHz ● Motor increments per second ≤ $1.6*10^6$ Inc/s

Recommended encoder cable:
- Both ends grounded
- Twisted Pair
- PELV
- Minimum conductor cross section: 0.14 mm² (AWG 24)
- Maximum length: 100m (328 ft)

PTO, Detail of Connector Pin

RJ45 Pin	PTO Function		Twisted Pair (P)
1	A	Chanel A	(P1)
2	/A	Chanel A inverted	(P1)
3	I	Chanel I	(P3)
4	B	Chanel B	(P2)
5	/B	Chanel B inverted	(P2)
6	/I	Chanel I inverted	(P3)
7		0 Volt	–
8		0 Volt	–

Drive Frame Sizes 1...3 - Top Side CN5 Connector

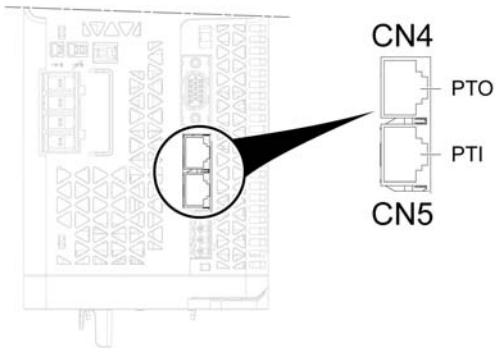

Terminal	Description	I/O Type	Electrical characteristics
PTI	Pulse train input	I	5 Vdc or 24 Vdc signals. The following signals can be connected: ● A/B signals ● P/D signals (Pulse/Direction) ● CW/CCW signals (ClockWise / CounterClockWise)

Recommended encoder cable:
- Both ends grounded
- Twisted Pair
- PELV
- Minimum conductor cross section: 0.14 mm² (AWG 24)

PTI, Input circuit and selection of method

The input circuit and the selected method affect the maximum permissible input frequency and the maximum permissible line length:

Input circuit	Unit	RS422	Push pull	Open collector
Minimum input frequency with method position synchronization	Hz	0	0	0
Minimum input frequency with method velocity synchronization	Hz	100	100	100
Maximum input frequency	MHz	1	0.2	0.01
Maximum line length	m (ft)	100 (328)	10 (32.8)	1 (3.28)

PTI, signal Input circuits 5 Vdc

RS422

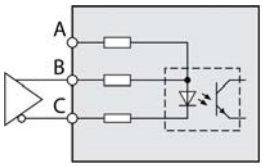

Push Pull

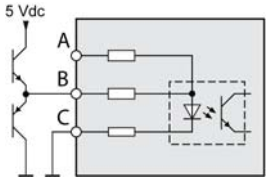

Open Collector

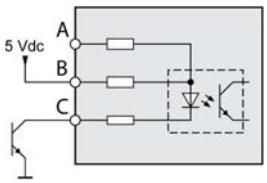

PTI, signal Input circuits 24 Vdc

Push Pull

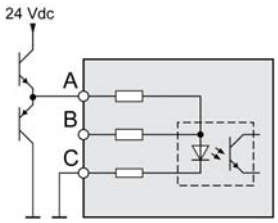

Open Collector

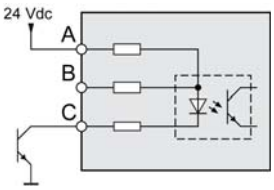

PTI, Detail of Connector Pins

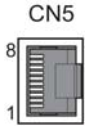

PTI signal	Pin	RS422 or 5 Vdc (1)		24 Vdc	
		Twisted Pair	Function	Twisted Pair	Function
A/B	1	A	Encoder channel A, 5 Vdc	–	–
	2	A	Encoder channel A, inverted	A	Encoder channel A, inverted
	3	–	–	–	
	4	B	Encoder channel B, 5 Vdc	–	
	5	B	Encoder channel B, inverted	B	Encoder channel B, inverted
	6	–	–	–	
	7	–	–	A	Encoder channel A, 24 Vdc
	8	–	–	B	Encoder channel B, 24 Vdc
P/D	1	A	Pulse, 5V dc	–	–
	2	A	Pulse, inverted	A	Pulse, inverted
	3	–		–	–
	4	B	Direction, 5 Vdc	–	–
	5	B	Direction, inverted	B	Direction, inverted
	6	–		–	–
	7	–		A	Pulse, 24 Vdc
	8	–		B	Direction, 24 Vdc
CW/CCW	1	A	Pulse positive, 5 Vdc	–	–
	2	A	Pulse positive, inverted	A	Pulse positive, inverted
	3	–		–	
	4	B	Pulse negative, 5 Vdc	–	
	5	B	Pulse negative, inverted	B	Pulse negative, inverted
	6	–		–	
	7	–		A	Pulse positive, 24 Vdc
	8	–		B	Pulse negative, 24 Vdc

1) Due to the input current of the optocoupler in the input circuit, a parallel connection of a driver output to several devices is not permitted.

Drive Frame Sizes 1...3 - Front Side CN6 Connectors

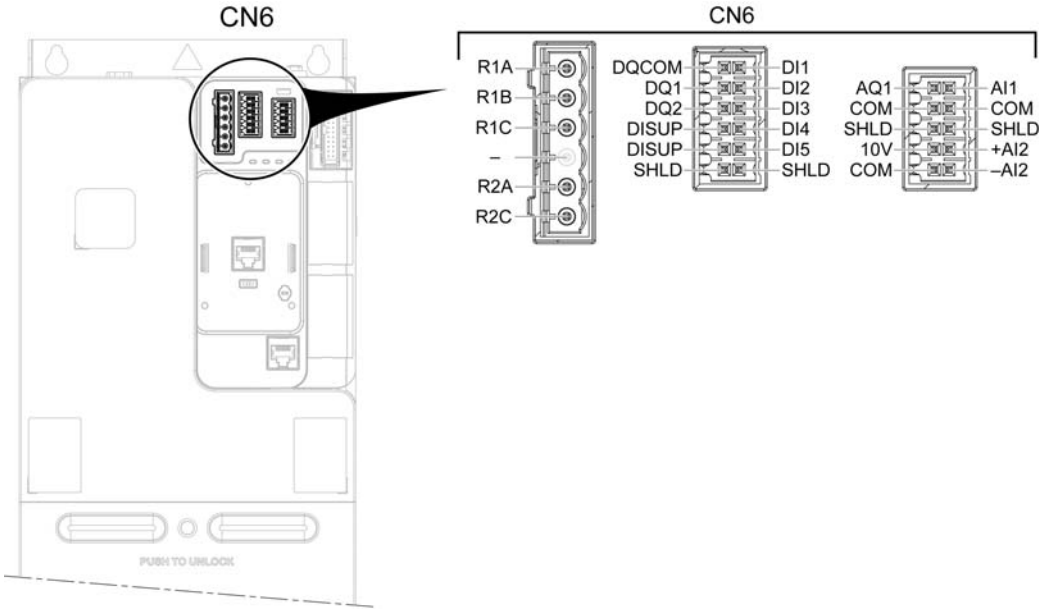

Terminal	Description	I/O Type	Electrical characteristics
R1A	NO contact of relay R1	O	**Output Relay 1** ● Minimum switching capacity: 5 mA for 24 Vdc ● Maximum switching current on resistive load: 3 A for 250 Vac (OVC II) and 30 Vdc ● Maximum switching current on inductive load: 2 A for 250 Vac (OVC II) and 30 Vdc. Inductive load must be equipped with a voltage surge suppression device according to ac or dc operation with total energy dissipation greater than the inductive energy stored in the load. Refer to sections Output Relay with Inductive AC Loads *(see page 140)* and Output Relay with Inductive DC Loads *(see page 141)*. ● Refresh time: 1 ms ± 0.25 ms ● Service life: 100,000 operations at maximum switching current
R1B	NC contact of relay R1	O	
R1C	Common point contact of relay R1	O	
–	Not wired	NC	Must not be wired to help ensure insulation distance with 230 VAC signals
R2A	NO contact of relay R2	O	**Output Relay 2** ● Minimum switching capacity: 5 mA for 24 Vdc ● Maximum switching current on resistive load: 5 A for 250 Vac (OVCII) and 30 Vdc ● Maximum switching current on inductive load: 2 A for 250 Vac (OVCII) and 30 Vdc. Inductive load must be equipped with a voltage surge suppression device according to ac or dc operation with total energy dissipation greater than the inductive energy stored in the load. Refer to sections Output Relay with Inductive AC Loads *(see page 140)* and Output Relay with Inductive DC Loads *(see page 141)* ● Refresh time: 1 ms ± 0.25 ms ● Service life: ❍ 100,000 operations at maximum switching current ❍ 1,000,000 operations at 0.5 A
R2C	Common point contact of relay R2	O	
DQCOM	Digital output common	I/O	Common for Logic output DQx

Terminal	Description	I/O Type	Electrical characteristics
DQ1 DQ2	Digital input/output	I/O	2 programmable logic inputs/outputs, using configuration menus **[DQ1 Configuration]** d o 1 and **[DQ2 Configuration]** d o 2 Digital Output ● Insulated, Input impedance 4.4 kΩ ● Maximum voltage: 30 Vdc ● Maximum output current: 100 mA ● Frequency range: 0…1 kHz ● Output Positive/Negative logic is managed by user external wiring. Digital Input: Inputs comply with IEC/EN 61131-2 logic type 1 ● Positive logic (Source): State 0 if≤5 Vdc or logic input not wired, state 1 if≥11 Vdc ● Negative logic (Sink): State 0 if≥16 Vdc or logic input not wired, state 1 if≤10 Vdc ● Maximum sampling time: 2 ms + 0.5 ms maximum Multiple assignment makes it possible to configure several functions on one input
DISUP	Digital input supply	I/O	Common supply for digital inputs on front potential depending on Sink/Source switch setting.
SHLD	I/O Shield	I/O	Shield for inputs/outputs
DI1-DI5	Digital input	I	5 programmable logic inputs. 24 Vdc input voltage Comply with IEC/EN 61131-2 logic type 1 ● Positive logic (Source): State 0 if ≤ 5 Vdc or logic input not wired, state 1 if ≥ 11 Vdc ● Negative logic (Sink): State 0 if≥16 Vdc or logic input not wired, state 1 if ≤ 10 Vdc ● Impedance 4.4 kΩ ● Maximum voltage: 30 Vdc ● Sampling time: 2 ms + 0.5 ms maximum Multiple assignment makes it possible to configure several functions on one input (example: DI1 assigned to forward and preset speed 2, DI3 assigned to reverse and preset speed 3).
AQ1	Analog output	O	Analog output software-configurable for voltage or current ● Voltage analog output 0...10 Vdc, minimum. Minimum load impedance 470 Ω ● Current analog output X-Y mA by programming X and Y from 0...20 mA, maximum load impedance 500 Ω ● Sampling time: 5 ms + 1 ms maximum ● Resolution 10 bits ● Accuracy: ± 1% for a temperature variation of 60°C (140°F) ● Linearity ± 0.2%

Terminal	Description	I/O Type	Electrical characteristics
AI1	Analog input and sensor input	I	Software-configurable V/A: voltage or current analog input ● Voltage analog input 0...10 Vdc, impedance 30 kΩ, ● Current analog input X-Y mA by programming X and Y from 0...20 mA, with impedance 250 Ω ● Sampling time: 1 ms + 1 ms maximum ● Resolution 12 bits ● Accuracy: ± 0.6% for a temperature variation of 60°C (140°F) ● Linearity ± 0.15% of maximum value Software-configurable thermal sensors ● PT100 ❍ 1 or 3 thermal sensors mounted in series (configurable by software) ❍ Sensor current: 5 mA maximum ❍ Range –20...200°C (–4...392°F) ❍ Accuracy ± 4°C (±7.2°F) for a temperature variation of 60°C (140°F) ● PT1000 ❍ 1 or 3 thermal sensors mounted in series (configurable by software) ❍ Sensor current: 1 mA ❍ Range –20...200°C (–4...392°F) ❍ Accuracy ± 4°C (±7.2°F) for a temperature variation of 60°C (140°F) ● KTY84 ❍ 1 thermal sensor ❍ Sensor current: 1 mA ❍ Range –20...200°C (–4...392°F) ❍ Accuracy ± 4°C (±7.2°F) for a temperature variation of 60°C (140°F) ● PTC ❍ 6 sensors maximum mounted in series ❍ Sensor current: 1 mA ❍ Nominal value: < 1.5 kΩ ❍ Overheat trigger threshold: 2.9 kΩ ± 0.2 kΩ ❍ Overheat reset threshold: 1.575 kΩ ± 0.75 kΩ ❍ Low impedance detection threshold: 50 kΩ –10 Ω/+20 Ω ❍ Protected for low impedance < 1000 Ω
COM	Analog I/O Common	I/O	0 V for analog outputs and inputs
SHLD	Analog I/O Shield	I/O	Shield for analog inputs/outputs
10V	Output supply for Analog input / Ref. pot.	O	Internal supply for the analog inputs ● 10.5 Vdc ● Tolerance ± 5% ● Current: maximum 10 mA ● Short circuit protected
AI2+/AI2-	Analog input differential	I	Voltage bipolar analog input –10...10 Vdc, impedance 20 kΩ ● Maximum sampling time: 1 ms + 1 ms maximum ● Resolution 12 bits ● Accuracy: ± 0.6% for a temperature variation of 60°C (140°F) ● Linearity ± 0.15% of maximum value

Drive Frame Sizes 1...3 - Front Side HMI and CN7 RJ45 Modbus Connectors

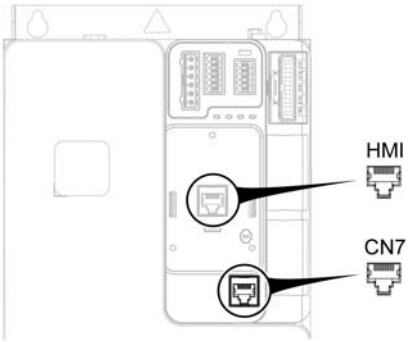

HMI: It is intended to connect the optional plain text display terminal or graphic display terminal.

- Plain text display terminal (*VW3A1113*): can be either plugged on the drive or mounted on the door of an enclosure with its dedicated door mounting kit (VW3A1114).
- Graphic display terminal (*VW3A1111*): cannot be plugged directly on the drive. It can be connected to the HMI port using a cable or it can be mounted on the door of an enclosure with its dedicated door mounting kit (*VW3A1112*)

CN7: RJ45 Modbus VP12S port reserved for modbus fieldbus and commissioning tool.

Wiring Diagram - PC with commissioning software

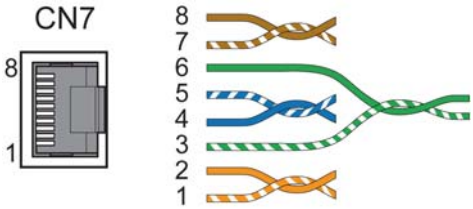

Detail of connector pins

Pin	Signal	Meaning	I/O
1...3	-	Reserved	-
4	MOD_D1	Bidirectional transmit/receive signal	RS485 level
5	MOD_D0	Bidirectional transmit/receive signal, inverted	RS485 level
6	-	Reserved	-
7	MOD+10V_OUT	10 V supply, maximum 100 mA	O
8	MOD_0V	Reference potential to MOD+10V_OUT	

Control Terminals Electrical data for Frame Sizes 4 and 5

General

This section provides technical data relating to control terminals for frame sizes 4, 5. The control terminals electrical data are different for frame sizes 1,2,3 and frame sizes 4, 5

NOTE:

- For a description of the terminal arrangement, refer to Arrangement and Characteristics of Control Terminals and Communication And I/O Ports *(see page 93)*
- For factory setting I/O assignment, refer to the Programming manual *(see page 10)* available on *www.schneider-electric.com*.
- For all LEDs description, refer to the Product LEDs section *(see page 120)* or to the Programming manual *(see page 10)* available on *www.schneider-electric.com*.

Characteristics of Control Terminals

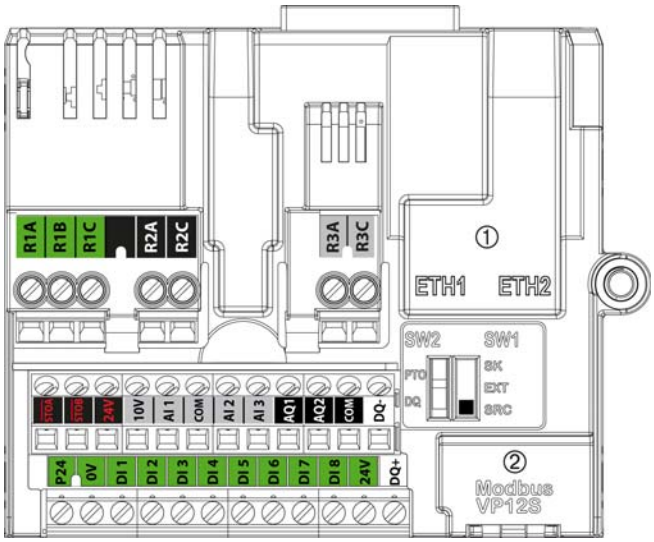

NOTE:

- For a description of the terminal arrangement, refer to Arrangement and Characteristics of Control Terminals and Communication And I/O Ports *(see page 93)*.
- For factory setting I/O assignment, refer to the Programming manual *(see page 10)*.

Terminal	Description	I/O Type	Electrical characteristics
R1A	NO contact of relay R1	O	**Output Relay 1** ● Minimum switching capacity: 5 mA for 24 Vdc ● Maximum switching current on resistive load: 3 A for 250 Vac (OVC II) and 30 Vdc ● Maximum switching current on inductive load: 2 A for 250 Vac (OVC II) and 30 Vdc. Inductive load must be equipped with a voltage surge suppression device according to ac or dc operation with total energy dissipation greater than the inductive energy stored in the load. Refer to sections Output Relay with Inductive AC Loads *(see page 140)* and Output Relay with Inductive DC Loads *(see page 141)*. ● Refresh time: 1 ms ± 0.25 ms ● Service life: 100,000 operations at maximum switching current
R1B	NC contact of relay R1	O	
R1C	Common point contact of relay R1	O	

Terminal	Description	I/O Type	Electrical characteristics
R2A	NO contact of relay R2	O	**Output Relay 2** ● Minimum switching capacity: 5 mA for 24 Vdc ● Maximum switching current on resistive load: 5 A for 250 Vac (OVCII) and 30 Vdc ● Maximum switching current on inductive load: 2 A for 250 Vac (OVCII) and 30 Vdc. Inductive load must be equipped with a voltage surge suppression device according to ac or dc operation with total energy dissipation greater than the inductive energy stored in the load. Refer to sections Output Relay with Inductive AC Loads *(see page 140)* and Output Relay with Inductive DC Loads *(see page 141)* ● Refresh time: 1 ms ± 0.25 ms ● Service life: ❍ 100,000 operations at maximum switching current ❍ 1,000,000 operations at 0.5 A
R2C	Common point contact of relay R2	O	
R3A	NO contact of relay R3	O	**Output Relay 3** ● Minimum switching capacity: 5 mA for 24 Vdc ● Maximum switching current on resistive load: 5 A for 250 Vac (OVCII) and 30 Vdc ● Maximum switching current on inductive load: 2 A for 250 Vac (OVCII) and 30 Vdc. Inductive load must be equipped with a voltage surge suppression device according to ac or dc operation with total energy dissipation greater than the inductive energy stored in the load. Refer to sections Output Relay with Inductive AC Loads *(see page 140)* and Output Relay with Inductive DC Loads *(see page 141)* ● Refresh time: 1 ms ± 0.25 ms ● Service life: ❍ 100,000 operations at maximum switching current ❍ 1,000,000 operations at 0.5 A
R3C	Common point contact of relay R3	O	
$\overline{\text{STOA}}$, $\overline{\text{STOB}}$	STO inputs	I	**Safety Function STO Inputs** Refer to the Embedded Safety Function Manual (*NVE64143*) available on *www.schneider-electric.com*
24V	Output power supply for digital inputs and safety function STO inputs	O	● +24 Vdc ● Tolerance: minimum 20.4 Vdc, maximum 27 Vdc ● Current: maximum 200 mA for both 24 Vdc terminals ● Terminal protected against overload and short-circuit ● In Sink Ext position, this supply is powered by external PLC supply
10V	Output supply for Analog input	O	Internal supply for the analog inputs ● 10.5 Vdc ● Tolerance ± 5% ● Current: maximum 10 mA ● Short circuit protected

Terminal	Description	I/O Type	Electrical characteristics
AI1, AI3	Analog input and sensor input	I	Software-configurable V/A : voltage or current analog input ● Voltage analog input 0...10 Vdc, impedance 31.5 kΩ, ● Current analog input X-Y mA by programming X and Y from 0...20 mA, with impedance 250 Ω ● Sampling time: 1 ms + 1 ms maximum ● Resolution 12 bits ● Accuracy: ± 0.6% for a temperature variation of 60°C (140°F) ● Linearity ± 0.15% of maximum value Software-configurable thermal sensors ● PT100 ❍ 1 or 3 thermal sensors mounted in series (configurable by software) ❍ Sensor current: 5 mA maximum ❍ Range –20...200°C (–4...392°F) ❍ Accuracy ± 4°C (± 39°F) for a temperature variation of 60°C (140°F) ● PT1000 ❍ 1 or 3 thermal sensors mounted in series (configurable by software) ❍ Sensor current: 1 mA ❍ Range –20...200°C (–4...392°F) ❍ Accuracy ± 4°C (± 39°F) for a temperature variation of 60°C (140°F) ● KTY84 ❍ 1 thermal sensor ❍ Sensor current: 1 mA ❍ Range –20...200°C (–4...392°F) ❍ Accuracy ± 4°C (± 39°F) for a temperature variation of 60°C (140°F) ● PTC ❍ 6 sensors maximum mounted in series ❍ Sensor current: 1 mA ❍ Nominal value: < 1.5 kΩ ❍ Overheat trigger threshold: 2.9 kΩ ± 0.2 kΩ ❍ Overheat reset threshold: 1.575 kΩ ± 0.75 kΩ ❍ Low impedance detection threshold: 50 kΩ –10 Ω/+20 Ω ❍ Protected for low impedance < 1000 Ω
COM	Analog I/O common	I/O	0 V for Analog inputs/outputs
AI2	Analog input	I	Voltage bipolar analog input –10...10 Vdc, impedance 31.5 kΩ ● Sampling time: 1 ms + 1 ms maximum ● Resolution 12 bits ● Accuracy: ± 0.6% for a temperature variation of 60°C (140°F) ● Linearity ± 0.15% of maximum value
AQ1	Analog output	O	AQ: Analog output software-configurable for voltage or current ● Voltage analog output 0...10 Vdc, minimum. Minimum load impedance 470 Ω, ● Current analog output X-Y mA by programming X and Y from 0...20 mA, maximum load impedance 500 Ω ● Sampling time: 5 ms + 1 ms maximum ● Resolution 10 bits ● Accuracy: ± 1% for a temperature variation of 60°C (140°F) ● Linearity ± 0.2%
AQ2	Analog output	O	
COM	Digital and analog output Common	I/O	0 V for analog outputs and logic output
DQ–	Digital output	O	Digital output configurable by switch ● Insulated ● Maximum voltage: 30 Vdc ● Maximum current: 100 mA ● Frequency range: 0...1 kHz ● Positive/Negative logic is managed by user external wiring.
DQ+	Digital output	O	

Terminal	Description	I/O Type	Electrical characteristics
DQ+	Pulse output	O	Pulse train output configurable by switch ● Open collector not insulated ● Maximum voltage: 30 Vdc ● Maximum current: 20 mA ● Frequency range: 0...30 kHz
P24	External input supply	I	+24 Vdc external input supply ● Tolerance: minimum 19 Vdc, maximum 30 Vdc ● Maximum current: 0.8 A
0V	0 V	I/O	0 V of P24
DI1-DI8	Digital inputs	I	8 programmable logic inputs 24 Vdc, comply with IEC/EN 61131-2 logic type 1 ● Positive logic (Source): State 0 if ≤ 5 Vdc or logic input not wired, state 1 if ≥ 11 Vdc ● Negative logic (Sink):State 0 if ≥ 16 Vdc or logic input not wired, state 1 if ≤ 10 Vdc ● Impedance 3.5 kΩ ● Maximum voltage: 30 Vdc ● Sampling time: 2 ms + 0.5 ms maximum Multiple assignment makes it possible to configure several functions on one input (example: DI1 assigned to forward and preset speed 2, DI3 assigned to reverse and preset speed 3).
DI7-DI8	Pulse inputs	I	Programmable Pulse input, comply with level 1 PLC, IEC 65A-68 standard ● State 0 if < 0.6 Vdc, state 1 if > 2.5 Vdc ● Pulse counter 0...30 kHz ● Frequency range: 0…30 kHz ● Cyclic ratio: 50 % ± 10 % ● Maximum input voltage 30 Vdc, < 10 mA ● Sampling time: 5 ms + 1 ms maximum

Wiring The Control Part of Frame Sizes 4 and 5

Preliminary Steps

DANGER

HAZARD OF ELECTRIC SHOCK, EXPLOSION OR ARC FLASH

Read and understand the instructions in **Safety Information** chapter before performing any procedure in this chapter.

Failure to follow these instructions will result in death or serious injury.

Unsuitable settings or unsuitable data or unsuitable wiring may trigger unintended movements, trigger signals, damage parts and disable monitoring functions.

WARNING

UNANTICIPATED EQUIPMENT OPERATION

- Only start the system if there are no persons or obstructions in the zone of operation.
- Verify that a functioning emergency stop push-button is within reach of all persons involved in the operation.
- Do not operate the drive system with unknown settings or data.
- Verify that the wiring is appropriate for the settings.
- Never modify a parameter unless you fully understand the parameter and all effects of the modification.
- When commissioning, carefully run tests for all operating states, operating conditions and potential error situations.
- Anticipate movements in unintended directions or oscillation of the motor.

Failure to follow these instructions can result in death, serious injury, or equipment damage.

I/O Relay Module Installation and Wiring

NOTE:

- For possible fieldbus module list, refer to the catalog *(see page 10)*.
- For fieldbus modules information, refer to the instruction sheet S1A45591 available on www.se.com

To help ensure correct wiring of the control part, apply the following instructions to install and connect an I/O relay module.

Step	Action
1	Insert the I/O relay module in an option slot.
2	Push the module into its location and keep access to the module terminal screws.
3	Insert the I/O cable in the cabling plate, according to the outlined location.
4	Wire the I/O relay module.
5	Push again the module to its final position.

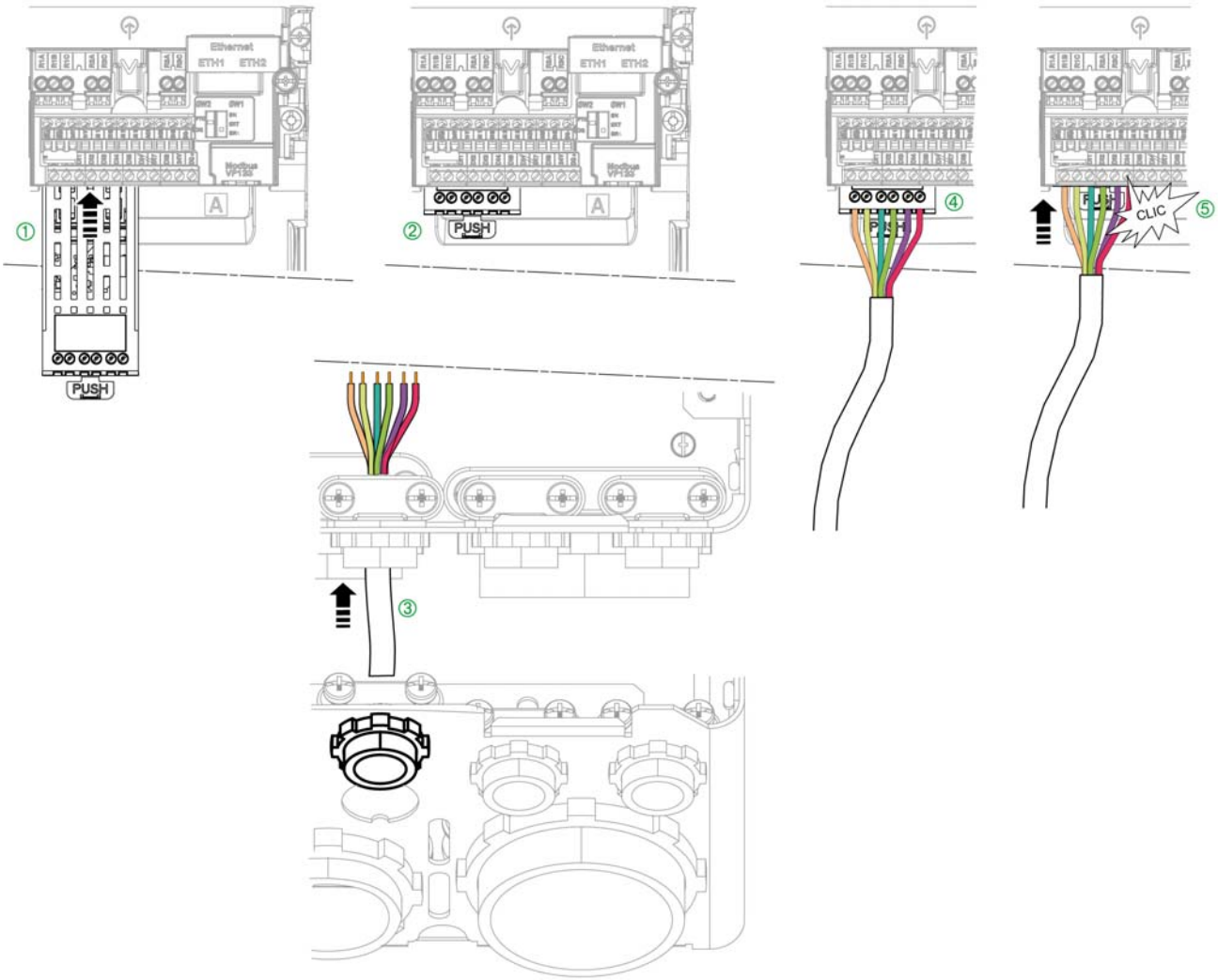

Encoder Interface Module Installation and Wiring

To help ensure correct wiring of the control part, apply the following instructions to install the encoder interface module

Step	Action
1	Insert the encoder interface module in the slot B *(see page 96)* and push it to its final position until you hear a “click” sound
2	Insert the cable in the cabling plate, according to the outlined location.
3	Wire the SUB-D connector
4	Plug the SUB-D connector on the option module

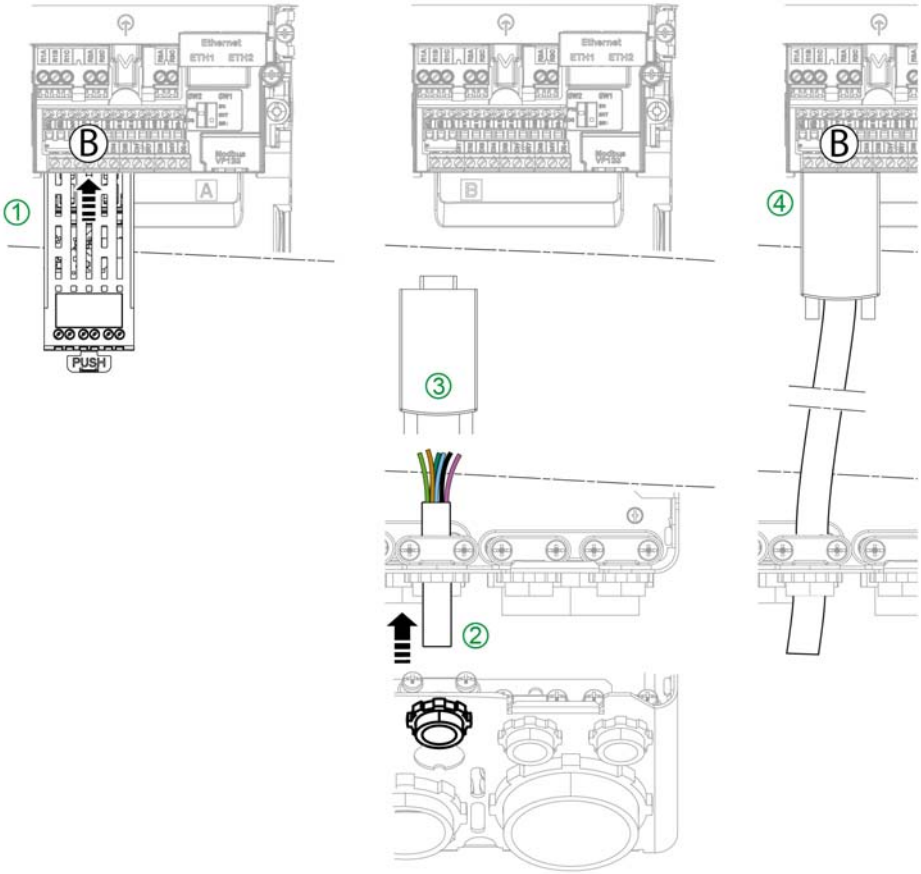

Shielding The Encoder Cable

Perform the wiring of the optional digital encoder interface module as described on the figure below to help improve EMC performance.

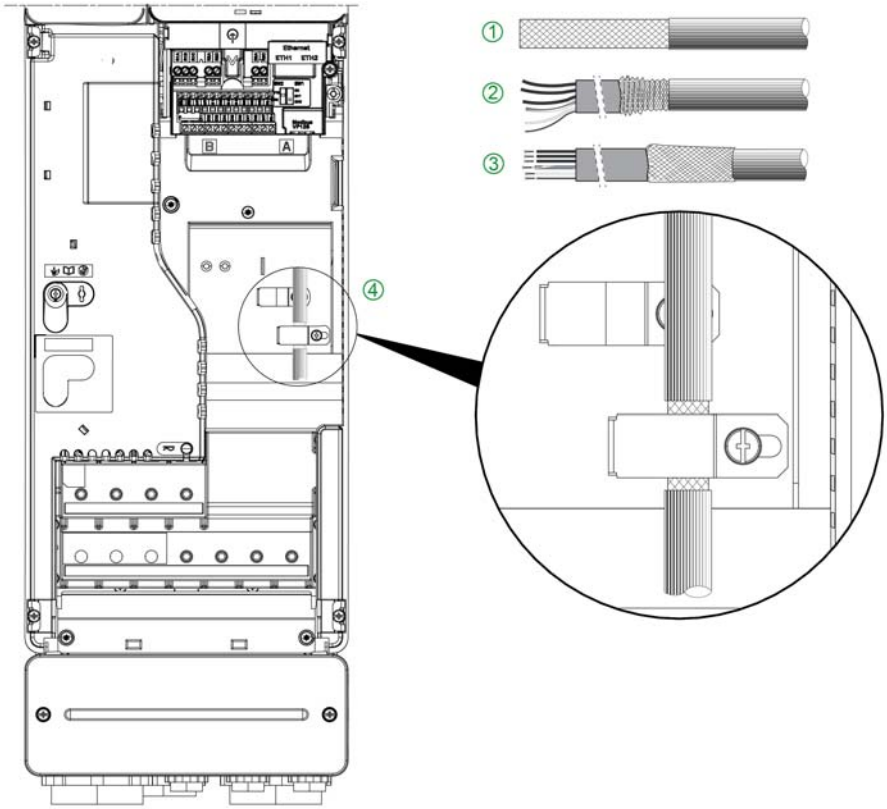

Optional Module Installation and Wiring

To help ensure correct wiring of the control part, apply the following instructions to install and connect a module to be wired

Step	Action
1	Insert the module in the slot A or B *(see page 96)*.
2	Insert the cable in the cabling plate, according to the outlined locations. The breakable cut out is used for fieldbus cables.
3	Connect the cable to the module

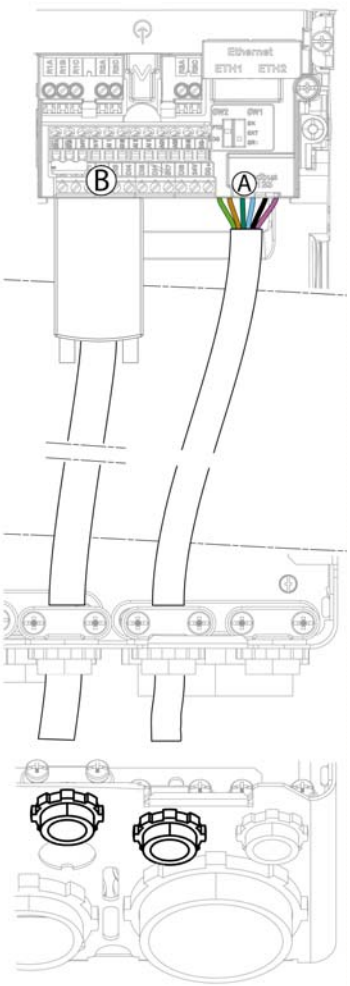

I/O Relay Module Installation and Wiring

To help ensure correct wiring of the control part, apply the following instructions to install an I/O relay module

Step	Action
1	Insert the I/O relay module in an option slot
2	Push the module into its location and keep access to the module terminal screws
3	Insert the I/O cable in the cabling plate, according to the outlined location
4	Wire the I/O relay module
5	Push again the module to its final position.

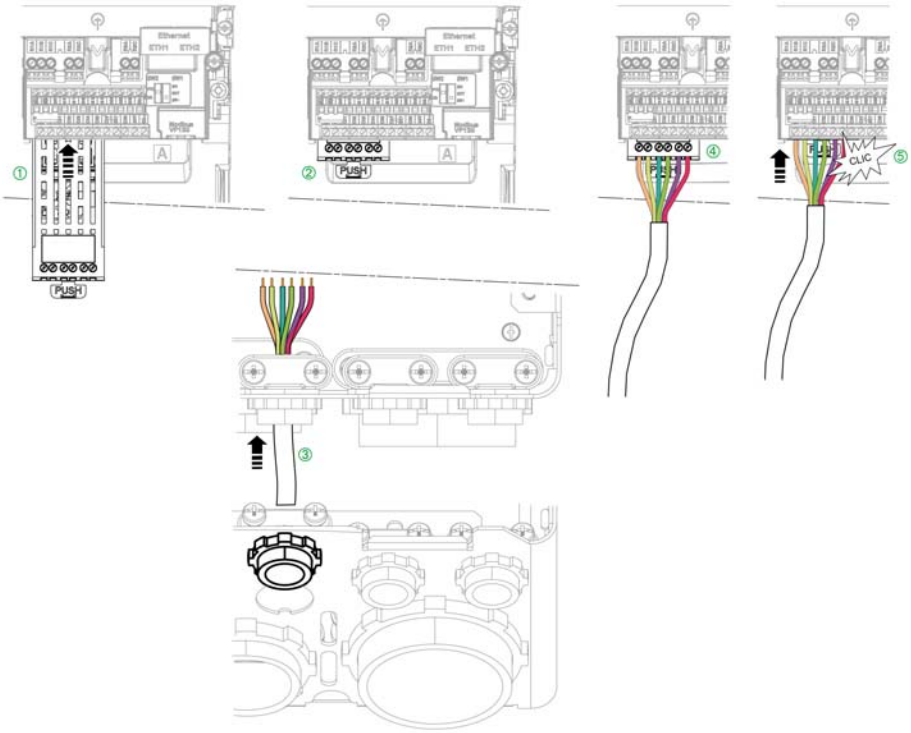

Control Block Wiring

To help ensure correct wiring of the control part, apply the following instructions to wire the control block terminals

Step	Action
1	Wire the P24, 0V, the digital inputs (DI1...DI8), the 24V and DQ+ terminals
2	Wire the safety outputs STOA, STOB, the 24V, the 10V, the analog inputs (AI1...AI3), the COM, the analog outputs (AQ1...AQ2), the COM and DQ- terminals
3	Wire the Relay outputs

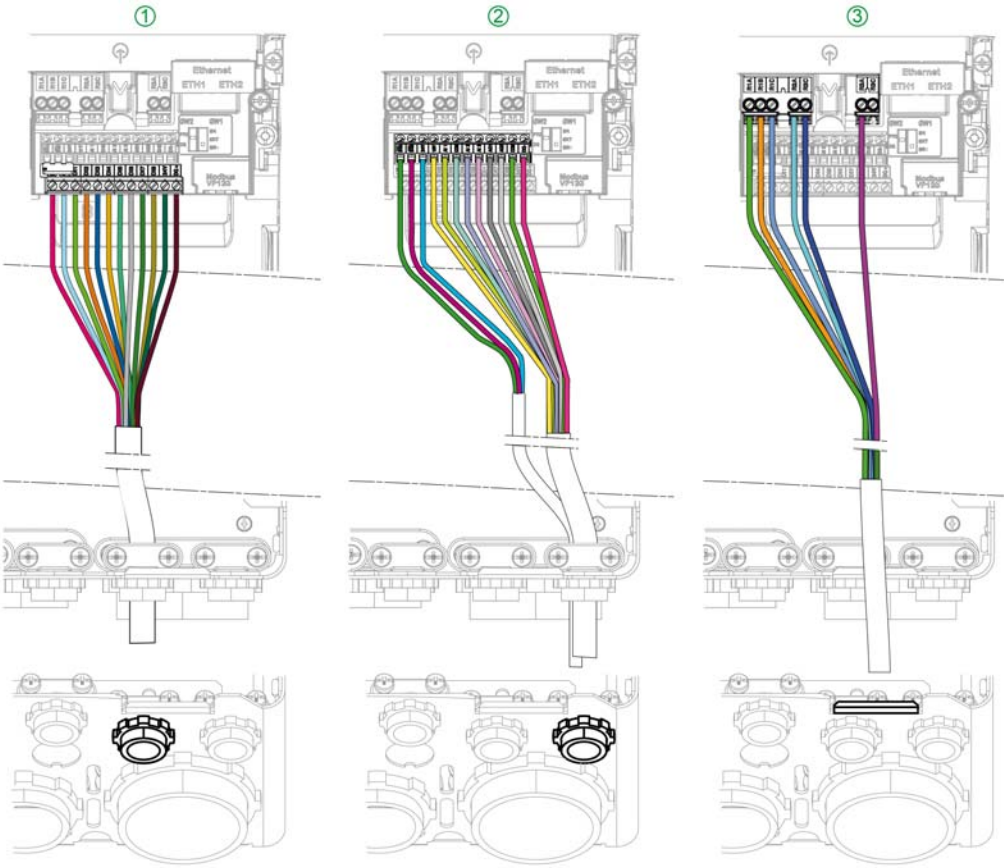

Ethernet Cable Path

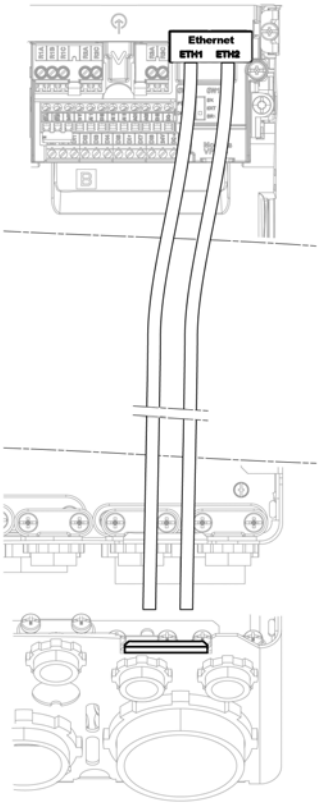

Product LEDs

Introduction

The drive embeds status LEDs that are used to indicate the drive status.

The number of LEDs available varies according to the drive.

- For frame sizes 1...3 - ATV340U07N4...ATV340D22N4: 4 LEDs.
- For frame sizes 1...3 - ATV340U07N4E...ATV340D22N4E: 4 additional LEDs on ETH1 and ETH2 ports
- For frame sizes 4 and 5 - ATV340D30N4E to ATV340D75N4E: 10 LEDs.

LEDs Description for Frame Sizes 1...3 - ATV340U07N4• to ATV340D22N4•

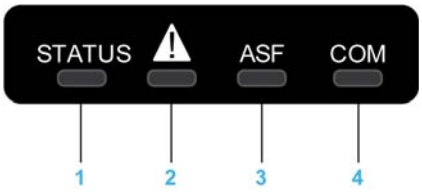

Following table provides the details of the drive status LEDs:

Item	LED	Color & status	Description
1	**STATUS**	OFF	Indicates that the drive is powered off
		Green flashing	Indicates that the drive is not running, ready to start
		Green blinking	Indicates that the drive is in transitory status (acceleration, deceleration, and so on)
		Green on	Indicates that the drive is running
		Yellow on	Device visual identification when using the DTM based commissioning software
2	**Warning/Error**	Red flashing	Indicates that the drive has detected a warning
		Red on	Indicates that the drive has detected an error
3	**ASF**	Yellow on	Indicates that the safety function has been triggered
4	**COM**	Yellow flashing	Indicates embedded Modbus serial activity

LEDs Description for Frame Sizes 4 and 5 - ATV340D30N4E to ATV340D75N4E

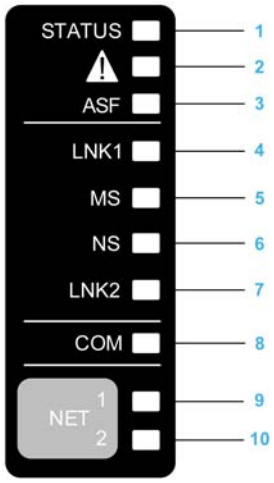

Following table provides the details of the drive status LEDs:

Item	LED	Color & status	Description
1	**STATUS**	OFF	Indicates that the drive is powered off
		Green flashing	Indicates that the drive is not running, ready to start
		Green blinking	Indicates that the drive is in transitory status (acceleration, deceleration, and so on)
		Green on	Indicates that the drive is running
		Yellow on	Device Visual identification function when using SoMove or the device DTM
2	**Warning/Error**	Red flashing	Indicates that the drive has detected a warning
		Red on	Indicates that the drive has detected an error
3	**ASF**	Yellow on	Indicates that the safety function has been triggered

Following table provides the details of the embedded Ethernet LEDs:

Item	LED	Color & status	Description
4	**LNK1**	OFF	No link.
		Green/Yellow flashing	Power on testing.
		Green on	Link established at 100 Mbit/s.
		Green flashing	Link established at 10 Mbit/s.
		Yellow flashing	Fieldbus activity at 100 Mbit/s.
		Yellow on	Fieldbus activity at 10 Mbit/s.
5	**MS**	OFF	No power is supplied to the device.
		Green/Red flashing	Power up testing.
		Green on	The device is operating correctly.
		Green flashing	The device has not been configured.
		Red flashing	The device has detected a recoverable minor detected error.
		Red on	The device has detected a non-recoverable major detected error.
6	**NS**	OFF	The device does not have an IP address or powered off.
		Green/Red flashing	Power on testing.
		Green on	A connection is established to control the command word.
		Green flashing	Device has a valid IP, but no command word connection.
		Red flashing	Duplicated IP.
		Red on	An established connection to control the command word is closes or timed out.

Item	LED	Color & status	Description
7	**LNK2**	OFF	No link.
		Green/Yellow flashing	Power on testing.
		Green on	Link established at 100 Mbit/s.
		Green flashing	Link established at 10 Mbit/s.
		Yellow flashing	Fieldbus activity at 100 Mbit/s.
		Yellow on	Fieldbus activity at 10 Mbit/s.

Following table provides the details of the embedded Modbus serial LEDs:

Item	LED	Color & status	Description
8	**COM**	Yellow flashing	Indicates embedded Modbus serial activity

Following table provides the details of the fieldbus module (for slot A - GP-FB) LEDs:

Item	LED	Color & status	Description
9	**NET 1**	Green/Red	For details, refer to the fieldbus manual
10	**NET 2**	Green/Red	For details, refer to the fieldbus manual

Sercos III LEDs on ATV340•••••S

Please refer to the ATV340 Sercos III manual *PHA33735* (English) *(see page 10)*.

DC BUS LED on Frame Sizes 4 and 5

Frame Size 4

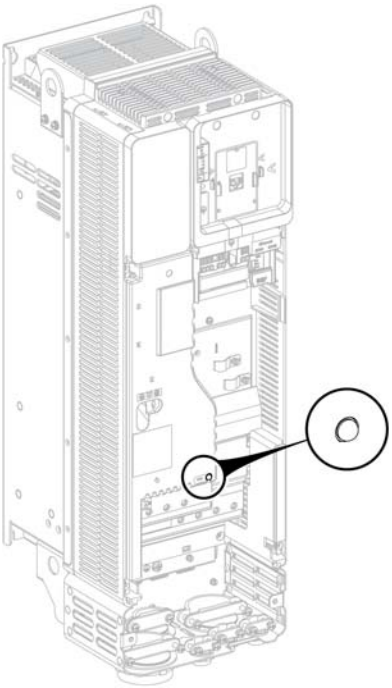

Frame Size 5

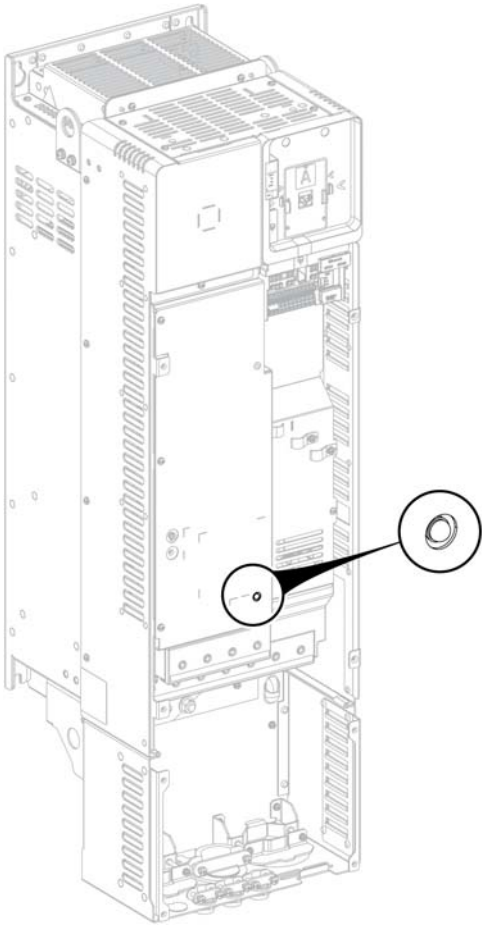

Section 4.6
SK EXT SRC Switch Configuration

What Is in This Section?

This section contains the following topics:

Topic	Page
SK-EXT-SRC Switch Configuration on Frame Sizes 1...3: ATV340U07N4•...D22N4•	124
SK-EXT-SRC Switch SW1 Configuration on Frame Sizes 4 and 5: ATV340D30N4E...D75N4E	125

SK-EXT-SRC Switch Configuration on Frame Sizes 1...3: ATV340U07N4•...D22N4•

⚠ WARNING

UNANTICIPATED EQUIPMENT OPERATION

- If the drive is set to **SK** or **EXT**, do not connect the **0 V** terminal to ground or to protective ground.
- Verify that accidental grounding of digital inputs configured for sink logic, caused, for example, by damage to the signal cables, cannot occur.
- Follow all applicable standards and directives such as NFPA 79 and EN 60204 for proper control circuit grounding practices.

Failure to follow these instructions can result in death, serious injury, or equipment damage.

Switch Description

The switch markings correspond to the following:

Marking	Description
SK	Sink internal
EXT	Sink external
SRC	Source

The switch is used to adapt the operation of the digital inputs to the technology of the programmable controller outputs. The switch is located below the HMI port. It has only an influence on DIx and DQx used in digital input mode.

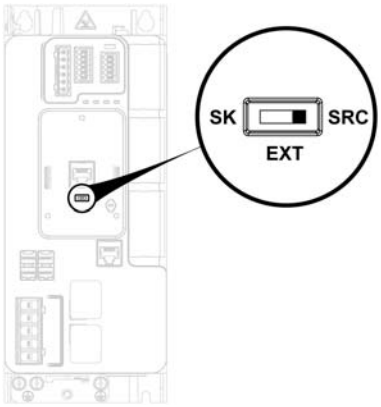

Settings

Switch Position		Description	Power Supply
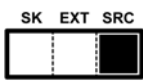	Source	Set the switch to SRC Source (factory setting) if using PLC outputs with PNP transistors. Positive Logic PLC. Outputs switches to +24V when active. Common to Europe PLCs.	DISUP: 24 Vdc Can be used to supply 24 Vdc to switches.
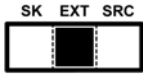	External (sink)	Switch Set to EXT (Sink external) position and use of an External Power Supply	DISUP: To be connected to 24 Vdc to supply all DIx internal logic
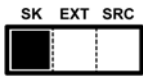	Sink	Set the switch to SK (Sink internal) if using PLC outputs with NPN transistors. Negative Logic PLC, Outputs switches to 0 V when active. Common to Asian PLCs.	DISUP: 0V Can be used to supply 0V to switches

SK-EXT-SRC Switch SW1 Configuration on Frame Sizes 4 and 5: ATV340D30N4E...D75N4E

⚠ WARNING

UNANTICIPATED EQUIPMENT OPERATION

- If the drive is set to **SK** or **EXT**, do not connect the **0 V** terminal to ground or to protective ground.
- Verify that accidental grounding of digital inputs configured for sink logic, caused, for example, by damage to the signal cables, cannot occur.
- Follow all applicable standards and directives such as NFPA 79 and EN 60204 for proper control circuit grounding practices.

Failure to follow these instructions can result in death, serious injury, or equipment damage.

Switch Description

The switch markings correspond to the following:

Marking	Description
SK	Sink internal
EXT	Sink external
SRC	Source

The switch is used to adapt the operation of the logic inputs to the technology of the programmable controller outputs. To access the switch, follow the Access to control Terminals procedure *(see page 86)*. The switch is located in the right side of the control terminals. It has only influence on DIx.

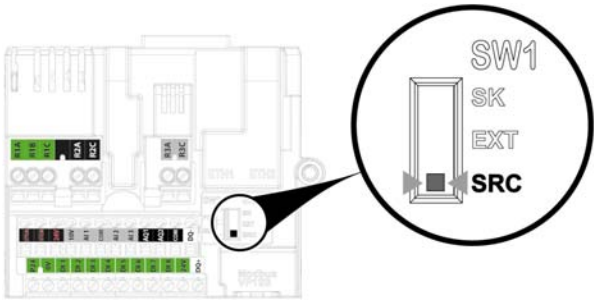

Settings

Switch Position		Description	Power Supply
	Source	Set the switch to SRC Source (factory setting) if using PLC outputs with PNP transistors. Positive Logic PLC. Outputs switches to +24V when active. Common to Europe PLCs.	Can be used to supply 24 Vdc to switches.
	External (sink)	Switch Set to EXT (Sink external) position and use of an External Power Supply	24 Vdc to supply all DIx internal logic
	Sink	Set the switch to SK (Sink internal) if using PLC outputs with NPN transistors. Negative Logic PLC, Outputs switches to 0 V when active. Common to Asian PLCs.	Can be used to supply 0V to switches

Section 4.7
PTO - DQ Switch (SW2) Configuration

What Is in This Section?

This section contains the following topics:

Topic	Page
PTO, Pulse Train Output Configuration on Frame Sizes 4 and 5	127
Digital Output Configuration on Frame Sizes 4 and 5	129

PTO, Pulse Train Output Configuration on Frame Sizes 4 and 5

Purpose

⚠ WARNING

UNANTICIPATED EQUIPMENT OPERATION

- If the drive is set to **SK** or **EXT**, do not connect the **0 V** terminal to ground or to protective ground.
- Verify that accidental grounding of digital inputs configured for sink logic, caused, for example, by damage to the signal cables, cannot occur.
- Follow all applicable standards and directives such as NFPA 79 and EN 60204 for proper control circuit grounding practices.

Failure to follow these instructions can result in death, serious injury, or equipment damage.

The SW2 (PTO/DQ) switch is used to configure the DQ+ or DQ- digital outputs.

- Set the switch to **PTO (Pulse Train Output)** to configure DQ+ and DQ- outputs as pulse train outputs. This may be used to chain pulse train inputs of another drive, using its DI7 or DI8 pulse inputs.
- Set the switch to **DQ (Digital Output)** to configure DQ+ and DQ- outputs as an assignable logic output.

Access

To access the switch, follow the Access to control Terminals procedure *(see page 86)*. The switch is located below the control terminals *(see page 95)*.

Switch SW1 Set to SK (Sink mode) Position

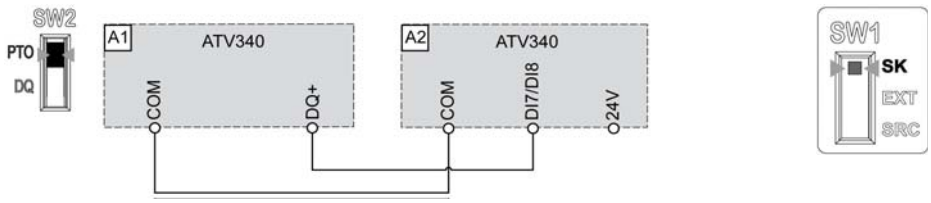

Switch SW1 Set to EXT (Sink ext mode) Position

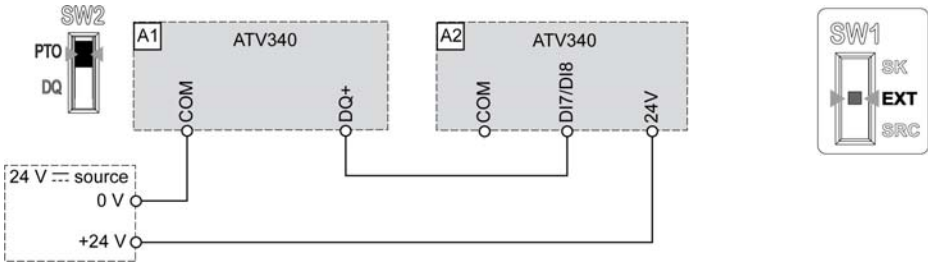

Switch SW1 Set to SRC (Source mode) Position

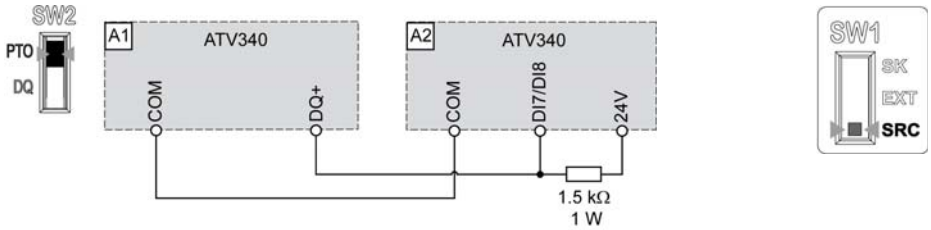

Switch SW1 Set to SRC (Source ext mode) Position

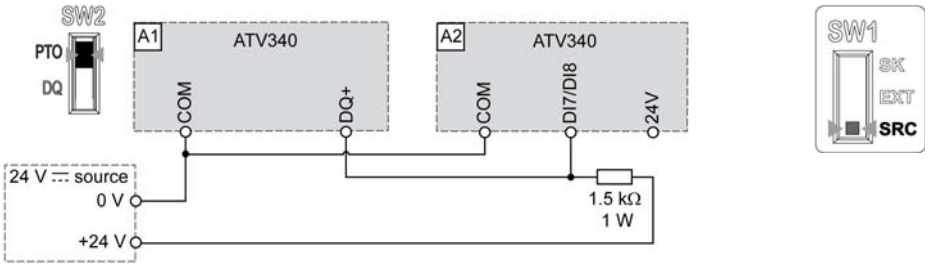

Digital Output Configuration on Frame Sizes 4 and 5

Purpose

⚠ WARNING

UNANTICIPATED EQUIPMENT OPERATION

- If the drive is set to **SK** or **EXT**, do not connect the **0 V** terminal to ground or to protective ground.
- Verify that accidental grounding of digital inputs configured for sink logic, caused, for example, by damage to the signal cables, cannot occur.
- Follow all applicable standards and directives such as NFPA 79 and EN 60204 for proper control circuit grounding practices.

Failure to follow these instructions can result in death, serious injury, or equipment damage.

The SW2 (PTO/DQ) switch is used to configure the DQ+ or DQ- digital outputs.

- Set the switch to **PTO (Pulse Train Output)** to configure DQ+ and DQ- outputs as pulse train outputs. This may be used to chain pulse train inputs of another drive, using its DI7 or DI8 pulse inputs.
- Set the switch to **DQ (Digital Output)** to configure DQ+ and DQ- outputs as an assignable logic output.

Access

To access the switch, follow the Access to control Terminals procedure *(see page 86)*. The switch is located below the control terminals *(see page 95)*.

Switch SW1 Set to SK (Sink mode) Position

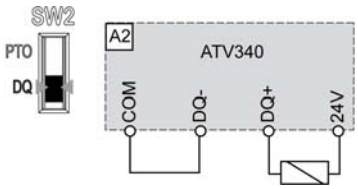

Switch SW1 Set to EXT (Sink ext mode) Position

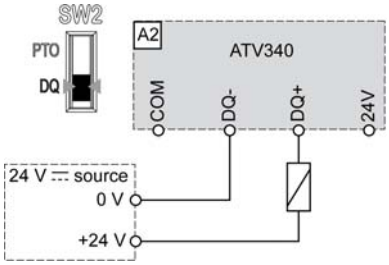

Switch SW1 Set to SRC (Source mode) Position

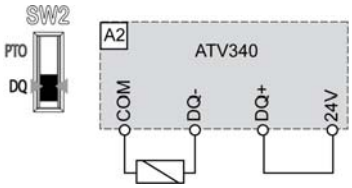

Switch SW1 Set to SRC (Source ext mode) Position

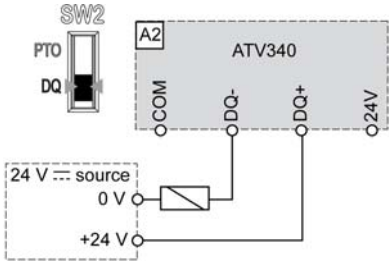

Section 4.8
Safe Torque Off STO Function

What Is in This Section?

This section contains the following topics:

Topic	Page
STO Safe Torque Off Wiring Diagram for Frame Sizes 1...3	132
STO Safe Torque Off Wiring Diagram for Frame Sizes 4 and 5	132

STO Safe Torque Off Wiring Diagram for Frame Sizes 1...3

Wiring Diagram

All details related to the STO safety function activation are given in the Embedded Safety Function Manual *NVE64143*.

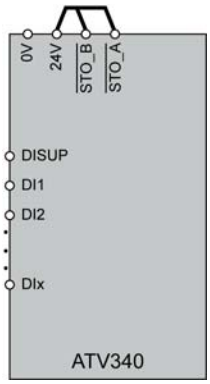

CN2 Connector

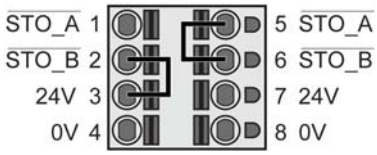

NOTE: $\overline{\text{STO_A}}$ and $\overline{\text{STO_B}}$ terminals are not factory wired.

When not used for functional safety the STO inputs should be connected to 24V.

NOTE:

- On frame sizes 1, 2 and 3, the 24 V (pin 3) can be disabled using **[24V Supply Output]** 524V menu. If the 24 V Supply output is disabled the STO signals must be externally supplied. Refer to the programming manual *NVE61643*
- To avoid triggering the STO function when switching-on the product, the external power supply must be previously switched on.

STO Safe Torque Off Wiring Diagram for Frame Sizes 4 and 5

Wiring Diagram

All details related to the STO safety function activation are given in the Embedded Safety Function Manual *NVE64143*.

When not used for functional safety the STO inputs should be connected to 24V.

NOTE:

- On frame sizes 4 and 5, STO inputs are also connected by default on a 24 Vdc terminal. If the external power supply is switched off, the function STO will be triggered.
- To avoid triggering the STO function when switching-on the product, the external power supply must be previously switched on.

Section 4.9
Digital Inputs Wiring

What Is in This Section?

This section contains the following topics:

Topic	Page
Digital Inputs Wiring on Frame Sizes 1...3	134
Digital Inputs Wiring on Frame Sizes 4 and 5	136

Digital Inputs Wiring on Frame Sizes 1...3

⚠ WARNING

UNANTICIPATED EQUIPMENT OPERATION

- If the drive is set to **SK** or **EXT**, do not connect the **0 V** terminal to ground or to protective ground.
- Verify that accidental grounding of digital inputs configured for sink logic, caused, for example, by damage to the signal cables, cannot occur.
- Follow all applicable standards and directives such as NFPA 79 and EN 60204 for proper control circuit grounding practices.

Failure to follow these instructions can result in death, serious injury, or equipment damage.

Digital Inputs: Internal Supply Using DISUP Signal

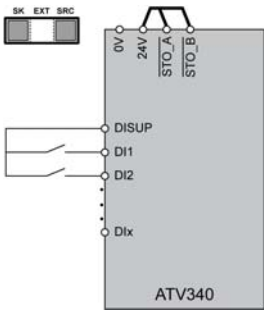

Switch can be set either to SK or SRC position. SRC setting recommended. In SRC position DISUP outputs 24 V. In SK position DISUP is connected to 0 V.

Digital Inputs: Positive Logic, Source, European Style, External Supply

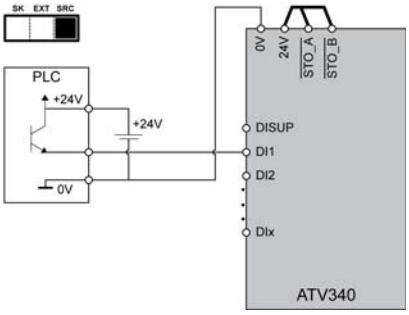

Set the switch to SRC position.

Digital Inputs: Negative Logic, Sink, Asian Style, External Supply

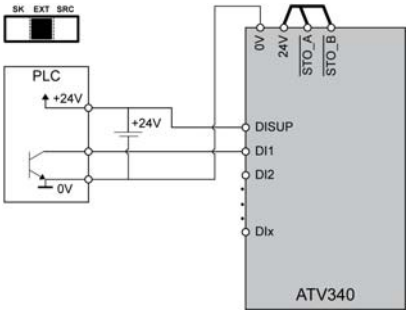

Set the switch to EXT position.

Digital Inputs: Negative Logic, Sink, Asian Style, Internal supply

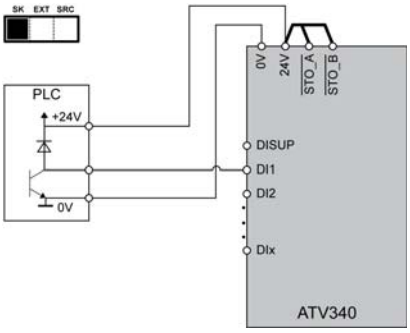

Set the switch to SK position.

Digital Inputs: Two ATV340 Share The Same Switch

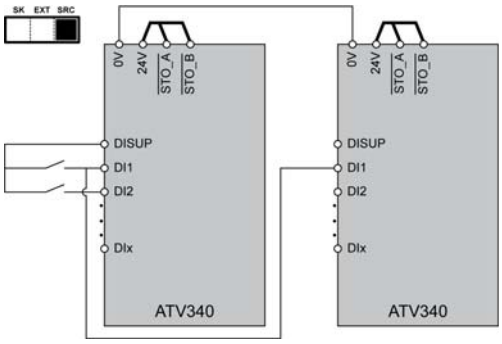

SRC setting recommended on both ATV340. With SK setting, an active switch will be detected when the second drive is switched-off.

Digital Inputs: Negative Logic, Sink, Asian Style, Internal Supply - Two ATV340 Share The Same Switch

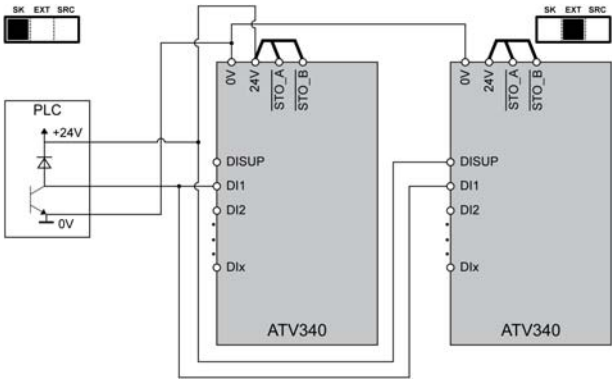

Set the switch to SK position on first drive. Set the switch to EXT position on the second drive.

Connect DISUP to 24V. Connect 0V.

Digital Inputs Wiring on Frame Sizes 4 and 5

⚠ WARNING

UNANTICIPATED EQUIPMENT OPERATION

- If the drive is set to **SK** or **EXT**, do not connect the **0 V** terminal to ground or to protective ground.
- Verify that accidental grounding of digital inputs configured for sink logic, caused, for example, by damage to the signal cables, cannot occur.
- Follow all applicable standards and directives such as NFPA 79 and EN 60204 for proper control circuit grounding practices.

Failure to follow these instructions can result in death, serious injury, or equipment damage.

Switch Set to SRC (Source) Position Using the Output Power Supply for the Digital Inputs

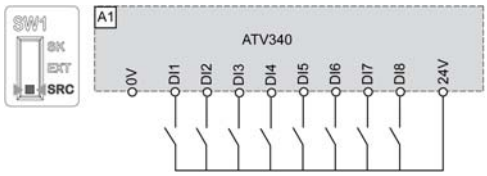

Switch Set to SRC (Source) Position and Use of an External Power Supply for the DIs

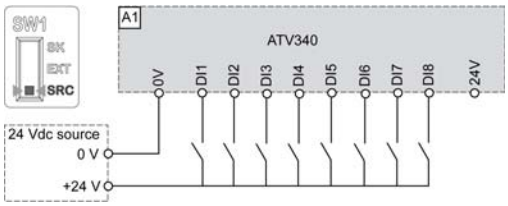

Switch Set to SK (Sink) Position Using the Output Power Supply for the Digital Inputs

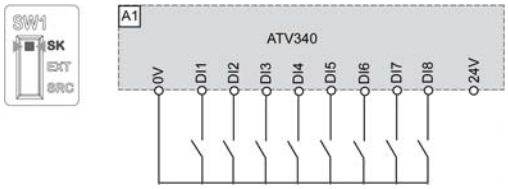

Switch Set to EXT Position Using an External Power Supply for the DIs

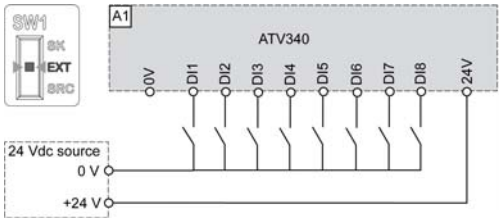

NOTE:

- STO inputs are also connected by default on a 24 Vdc terminal. If the external power supply is switched off, the function STO will be triggered.
- To avoid triggering the STO function when switching-on the product, the external power supply must be previously switched on.

Section 4.10
Digital Outputs Wiring

What Is in This Section?

This section contains the following topics:

Topic	Page
Digital Outputs Wiring on Frame sizes 1...3	138
Digital Outputs Wiring on Frame sizes 4 and 5	138

Digital Outputs Wiring on Frame sizes 1...3

Digital Outputs: Internal Supply

Positive Logic, Source, European Style,
DQ switches to +24V

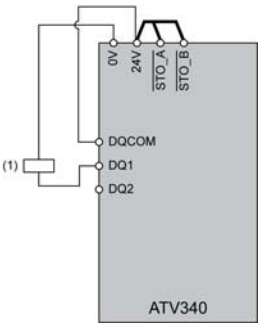

Negative Logic, Sink, Asian Style,
DQ switches to 0V

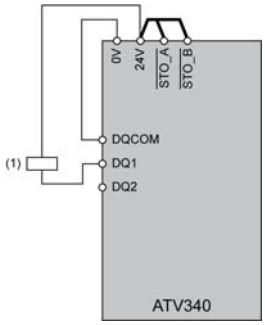

(1) relay or valve

Digital Outputs: External Supply

Positive Logic, Source, European Style,
DQ switches to +24V

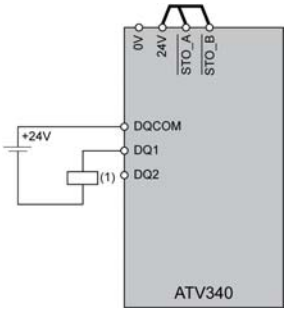

Negative Logic, Sink, Asian Style,
DQ switches to 0V

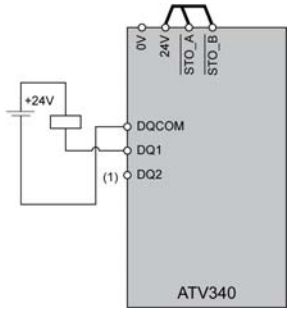

(1) relay or valve

DQ1 and DQ2 settings

The following table shows the possible settings. Refer to the CN6 connector terminal description *(see page 104)*, the control block wiring diagram *(see page 71)*, and the programming manual *(see page 10)*.

If...	Then...
DQ1 and DQ2 are not configured (factory setting)	DQ1 and DQ2 are digital outputs
DQ1 and DQ2 are configured as digital inputs	DQ1 and DQ2 become digital inputs DI6 (DQ1) and DI7 (DQ2)

NOTE:
- Hardware wiring and software settings must be consistent,
- It is not possible to set DQ1 and DQ2 to get digital input and digital output at the same time.

Digital Outputs Wiring on Frame sizes 4 and 5

Description and Wiring Diagrams

The SW2 (PTO/DQ) switch is used to configure the DQ or DQ- digital outputs.

Refer to the PTO - DQ Switch (SW2) Configuration section *(see page 129)*

Section 4.11
Relay Contacts Wiring

What Is in This Section?

This section contains the following topics:

Topic	Page
Output Relay with Inductive AC Loads	140
Output Relay with Inductive DC loads	141

Output Relay with Inductive AC Loads

General

The AC voltage source must be of overvoltage category II (OVC II) according to IEC61800-5-1.

If it is not the case an insulation transformer must be used.

Contactors with AC Coil

If controlled by relay, a resistor-capacitor (RC) circuit must be connected in parallel to the coil of the contactor, as shown on the drawing below.

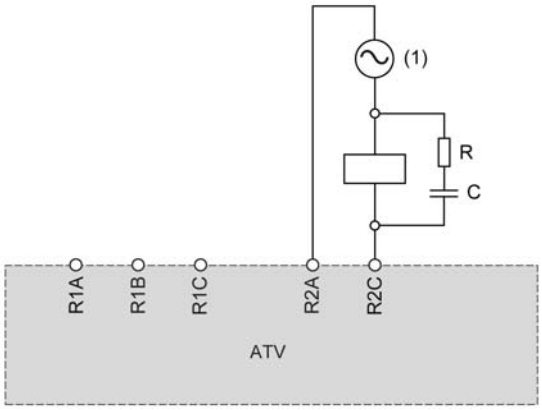

(1) AC 250 Vac maxi.

Schneider Electric AC contactors have a dedicated area on the housing to plug easily the RC device. Refer to the Motor control and protection components catalog *MKTED210011EN* available on *se.com* to find the RC device to be associated with the contactor used.

Example: With a 48 Vac source, contactors *LC1D09E7* or *LC1DT20E7* have to be used with *LAD4RCE* voltage suppression device.

Other Inductive AC Loads

For other inductive AC loads...

- Use an auxiliary contactor connected on drive to control the load.
  Example: with a 48 Vac source, auxiliary contactors *CAD32E7* or *CAD50E7* with *LAD4RCE* voltage suppression device.
- When using a third party inductive AC load, request the supplier to provide information on the voltage suppression device, in order to avoid overvoltage above 375 V during relay opening.

Output Relay with Inductive DC loads

Contactors with DC Coil

If controlled by relay, a bidirectional transient voltage suppression (TVS) diode, also called transil, must be connected in parallel to the coil of the contactor, as shown on the drawing below.

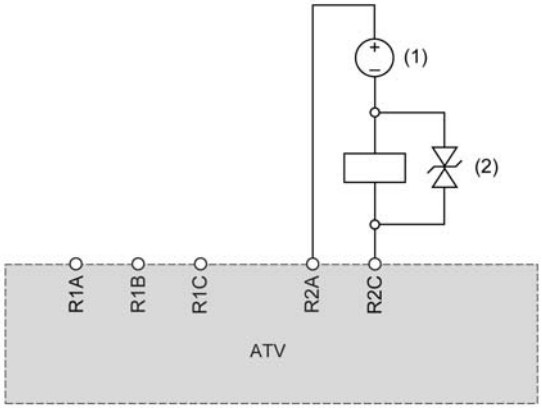

(1) DC 30 Vdc maxi.
(2) TVS diode

Schneider Electric contactors with DC coil include the TVS diode. No additional device is required.

Refer to the Motor control and protection components catalogue *MKTED210011EN* available on *se.com* for more information.

Other Inductive DC Loads

Other inductive DC loads without embedded TVS diode must use one of the following voltage suppression device:

- A bidirectional TVS device as shown on the drawing above, defined by...
  - TVS break-down voltage greater than 35 Vdc,
  - TVS clamping voltage V(TVS) less than 50 Vdc
  - TVS peak power dissipation greater than load rated current, I(load) x V(TVS).
    Example: with I(load) = 0.9 A and V(TVS) = 50 Vdc, TVS peak power must be greater than 45 W
  - TVS average power dissipation greater than the value calculated by the following
    0.5 x I(load) x V(TVS) x load time constant x number of operation per second.
    Example: with I(load) = 0.9 A and V(TVS) = 50 Vdc, load time constant = 40 ms (load inductance divided by load resistance) and 1 operation every 3 s, the TVS average power dissipation must be greater than 0.5 x 0.9 x 50 x 0.04 x 0.33 = 0.3 W.
- A fly-back diode as shown in the drawing below.

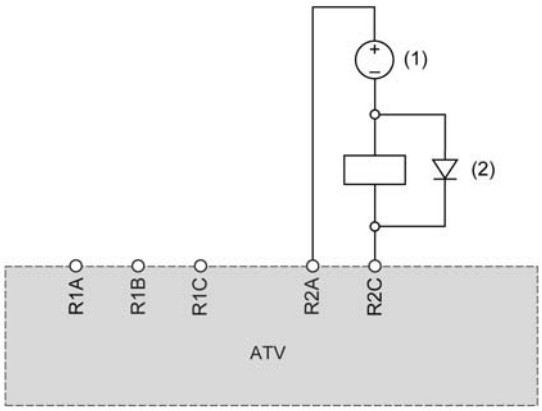

(1) DC 30 Vdc maxi.
(2) Flyback diode

The diode is a polarized device. The fly-back diode must be defined by...

- a reverse voltage greater than 100 Vdc,
- a rated current greater than two times the load rated current,
- a thermal resistance: junction to ambient temperature (in K/W) less than 90 / (1.1 x I(load)) to operate at maximum 60°C (140°F) ambient temperature.
  Example: with I(load) = 1.5 A, select a 100 V, 3 A rated current diode with a thermal resistance from junction to ambient less than 90 / (1.1 x 1.5) = 54.5 K/W.

Using a flyback diode, the relay opening time will be longer than with a TVS diode.

NOTE: Use diodes with leads for easy wiring and keep at least 1 cm (0.39 in.) of leads at each side of the case of the diode for a correct cooling.

Chapter 5
Checking Installation

Before Switching On

The safety function STO (Safe Torque Off) does not remove power from the DC bus. The safety function STO only removes power to the motor. The DC bus voltage and the mains voltage to the drive are still present.

⚠ ⚠ DANGER

HAZARD OF ELECTRIC SHOCK

- Do not use the safety function STO for any other purposes than its intended function.
- Use an appropriate switch, that is not part of the circuit of the safety function STO, to disconnect the drive from the mains power.

Failure to follow these instructions will result in death or serious injury.

Unsuitable settings or unsuitable data or unsuitable wiring may trigger unintended movements, trigger signals, damage parts and disable monitoring functions.

⚠ WARNING

UNANTICIPATED EQUIPMENT OPERATION

- Only start the system if there are no persons or obstructions in the zone of operation.
- Verify that a functioning emergency stop push-button is within reach of all persons involved in the operation.
- Do not operate the drive system with unknown settings or data.
- Verify that the wiring is appropriate for the settings.
- Never modify a parameter unless you fully understand the parameter and all effects of the modification.
- When commissioning, carefully run tests for all operating states, operating conditions and potential error situations.
- Anticipate movements in unintended directions or oscillation of the motor.

Failure to follow these instructions can result in death, serious injury, or equipment damage.

If the power stage is disabled unintentionally, for example, as a result of power outage, errors or functions, there is a possibility that the motor is no longer decelerated in a controlled way.

⚠ WARNING

UNANTICIPATED EQUIPMENT OPERATION

Verify that movements without braking effect does not result in unsafe conditions.

Failure to follow these instructions can result in death, serious injury, or equipment damage.

Mechanical Installation

Verify the mechanical installation of the entire drive system:

Step	Action	✓
1	Does the installation meet the specified distance requirements?	
2	Did you tighten all fastening screws with the specified tightening torque?	

Electrical installation

Verify the electrical connections and the cabling:

Step	Action	✓
1	Did you connect all protective ground conductors?	
2	The correct tightening of the screws may be altered during assembly and wiring phases of the drive. Verify and adjust the tightening of all terminal screws to the specified nominal torque.	
3	Do all fuses and circuit breaker have the correct rating; are the fuses of the specified type? (refer to the information provided in the ATV340 Getting Started Annex (SCCR), catalog number *NVE37641*) for UL/CSA compliance and also in the Catalog *(see page 10)* for IEC compliance.	
4	Did you connect or insulate all wires at the cable ends?	
5	Did you properly connect and install all cables and connectors?	
6	Did you properly connect the signal wires?	
7	Are the required shield connections EMC-compliant?	
8	Did you take all measures for EMC compliance?	

Covers And Seals

Verify that all devices, doors and covers of cabinet are properly installed to meet the required degree of protection.

Chapter 6
Maintenance

What Is in This Chapter?

This chapter contains the following topics:

Topic	Page
Scheduled Servicing	145
Long-term Storage	147
Decommissioning	147
Additional Support	147

Scheduled Servicing

Serviceable products

The drives of frame sizes 1...3 are not serviceable products.

For drives of frame sizes 4 and 5 servicing, please refer to your Customer Care Center.

Servicing

⚠ ⚠ DANGER

HAZARD OF ELECTRIC SHOCK, EXPLOSION OR ARC FLASH

Read and understand the instructions in **Safety Information** chapter before performing any procedure in this chapter.

Failure to follow these instructions will result in death or serious injury.

The temperature of the products described in this manual may exceed 80 °C (176 °F) during operation.

⚠ WARNING

HOT SURFACES

- Ensure that any contact with hot surfaces is avoided.
- Do not allow flammable or heat-sensitive parts in the immediate vicinity of hot surfaces.
- Verify that the product has sufficiently cooled down before handling it.
- Verify that the heat dissipation is sufficient by performing a test run under maximum load conditions.

Failure to follow these instructions can result in death, serious injury, or equipment damage.

⚠ WARNING

INSUFFICIENT MAINTENANCE

Verify that the maintenance activities described below are performed at the specified intervals.

Failure to follow these instructions can result in death, serious injury, or equipment damage.

Adherence to the environmental conditions must be ensured during operation of the drive. In addition, during maintenance, verify and, if appropriate, correct all factors that may have an impact on the environmental conditions.

	Part concerned	Activity	Interval (1)
Overall condition	All parts such as housing, HMI, control block, connections, etc.	Perform a visual inspection	At least every year
Corrosion	Terminals, connectors, screws, EMC plate	Inspect and clean if required	
Dust	Terminals, fans, cabinet air inlets and air outlets, air filters of cabinet	Inspect and clean if required	
Cooling	Fan	Verify the fan operation	At least every year
Fastening	All screws for electrical and mechanical connections	Verify tightening torques	At least every year
(1) Maximum maintenance intervals from the date of commissioning. Reduce the intervals between maintenance to adapt maintenance to the environmental conditions, the operating conditions of the drive, and to any other factor that may influence the operation and/ or maintenance requirements of the drive.			

NOTE: The fan operation depends on the drive thermal state. The drive may be running and the fan not.

Fans may continue to run for a certain period of time even after power to the product has been disconnected.

⚠ CAUTION

RUNNING FANS

Verify that fans have come to a complete standstill before handling them.

Failure to follow these instructions can result in injury or equipment damage.

Diagnostic And Troubleshooting

Refer to the ATV340 Programming Manual *(see page 10)* available on *www.schneider-electric.com*.

Spares and repairs

Serviceable products: Please refer to your Customer Care Center on:

www.schneider-electric.com/CCC.

Long-term Storage

Capacitor Reforming

If the drive was not connected to mains for an extended period of time, the capacitors must be restored to their full performance before the motor is started.

NOTICE

REDUCED CAPACITOR PERFORMANCE

- Apply mains voltage to the drive for one hour before starting the motor if the drive has not been connected to mains for the following periods of time:
  - 12 months at a maximum storage temperature of +50°C (+122°F)
  - 24 months at a maximum storage temperature of +45°C (+113°F)
  - 36 months at a maximum storage temperature of +40°C (+104°F)
- Verify that no Run command can be applied before the period of one hour has elapsed.
- Verify the date of manufacture if the drive is commissioned for the first time and run the specified procedure if the date of manufacture is more than 12 months in the past.

Failure to follow these instructions can result in equipment damage.

If the specified procedure cannot be performed without a Run command because of internal mains contactor control, perform this procedure with the power stage enabled, but the motor being at standstill so that there is no appreciable mains current in the capacitors.

Decommissioning

Uninstall the Product

Observe the following procedure when uninstalling the product.

- Switch off all supply voltage. Verify that no voltages are present - refer to Safety Information chapter *(see page 5)*.
- Remove all connection cables.
- Uninstall the product.

End of Life

The components of the product consist of different materials which can be recycled and which must be disposed of separately.

- Dispose of the packaging in compliance with all applicable regulations.
- Dispose of the product in compliance with all applicable regulations.

Refer to Green Premium section *(see page 22)* for information and documents on environmental protection such as EoLI (End of Life instruction).

Additional Support

Customer Care Center

For additional support, you can contact our Customer Care Center on:

www.schneider-electric.com/CCC.

Glossary

A

AC

Alternating Current

D

DC

Direct Current

E

ELV

Extra-Low Voltage. For more information: IEC 60449

Error

Discrepancy between a detected (computed, measured, or signaled) value or condition and the specified or theoretically correct value or condition.

F

Factory setting

Factory settings when the product is shipped

Fault

Fault is an operating state. If the monitoring functions detect an error, a transition to this operating state is triggered, depending on the error class. A "Fault reset" is required to exit this operating state after the cause of the detected error has been removed. Further information can be found in the pertinent standards such as IEC 61800-7, ODVA Common Industrial Protocol (CIP).

Fault reset

A function used to restore the drive to an operational state after a detected error is cleared by removing the cause of the error so that the error is no longer active.

G

GP

General-Purpose

L

L/R

Time constant equal to the quotient of inductance value (L) over the resistance value (R).

N

NC contact

Normally Closed contact

NO contact

Normally Open contact

O

OEM

Original Equipment Manufacturer

OVCII

Overvoltage Category II, according IEC 61800-5-1

P

PA/+

DC bus terminal

PC/-

DC bus terminal

PELV

Protective Extra Low Voltage, low voltage with isolation. For more information: IEC 60364-4-41

PLC

Programmable logic controller

Power stage

The power stage controls the motor. The power stage generates current for controlling the motor.

PTC

Positive Temperature Coefficient. PTC thermistor probes integrated in the motor to measure its temperature

R

REACh

Registration, Evaluation, Authorisation and restriction of Chemicals regulation

RoHS

Restriction of Hazardous Substances

S

SCPD

Short-Circuit Protective Device

STO

Safe Torque Off: No power that could cause torque or force is supplied to the motor

T

TVS Diode

Transient Voltage Suppression Diode

V

VHP

Very High Horse Power (> 800 kW)

W

Warning

If the term is used outside the context of safety instructions, a warning alerts to a potential problem that was detected by a monitoring function. A warning does not cause a transition of the operating state.