Product Recycling Manual

GD20 series Inverter

Shenzhen INVT Electric Co., Ltd

Content

1 Introduction to the manual

1.1 Contents of chapter 1

This chapter contains the main contents of the manual and information related to compatibility and target audience.

1.2 Scope of application

This manual applies to GD20 series inverters and their optional accessories.

1.3 Target audience

The manual is intended for INVT customers and professional recyclers.

1.4 Main contents of this manual

This manual provides information for treatment facilities conforming to EU directive on waste electrical and electronic equipment (WEEE).

This manual is divided into the following chapters.

- Product material
- Manufacturing and application
- Disposal

As WEEE directive is implemented through national regulations, the requirements vary in different EU member state.

Drives play an essential role in various kinds of machines or equipment. If the end product needs to comply with WEEE directive, the drive of this product should also comply with related requirements depending on actual application conditions.

The WEEE directive is not applicable to drives used in large-scale fixed equipment, large-scale stationary industrial tools, vehicle of transport for persons and goods, or non-road mobile machinery made for exclusive purpose.

Contact local environmental agents for the latest information concerning material recycling or other treatment.

1.5 Disclaimer

This recycling manual does not form part of any quotation or contract, is believed to be accurate and reliable and may be changed without notice. No liability will be accepted by the publisher for any consequences of its use. Publication thereof does not convey nor imply any license under patent - or other industrial or intellectual - property rights.

2 Product material

2.1 Contents of this chapter

This chapter presents the main parts/components and materials of GD20 models of frame sizes A1 to A12. The frame size of each model is listed in the table below.

Model	Frame size
GD20-0R4G-S2	A1
GD20-0R7G-S2	
GD20-1R5G-S2	A2
GD20-2R2G-S2	
GD20-0R4G-2	A3
GD20-0R7G-2	
GD20-1R5G-2	A4
GD20-2R2G-2	
GD20-004G-2	
GD20-5R5G-2	A5
GD20-7R5G-2	
GD20-0R7G-4	A6
GD20-1R5G-4	
GD20-2R2G-4	
GD20-004G-4	A7
GD20-5R5G-4	
GD20-7R5G-4	A8
GD20-011G-4	
GD20-015G-4	
GD20-018G-4	A9
GD20-022G-4	
GD20-030G-4	A10
GD20-037G-4	
GD20-045G-4	A11
GD20-055G-4	
GD20-075G-4	
GD20-090G-4	A12
GD20-110G-4	

2.2 Structure of GD20 model frame size A1

The main parts and components are listed in the table below.

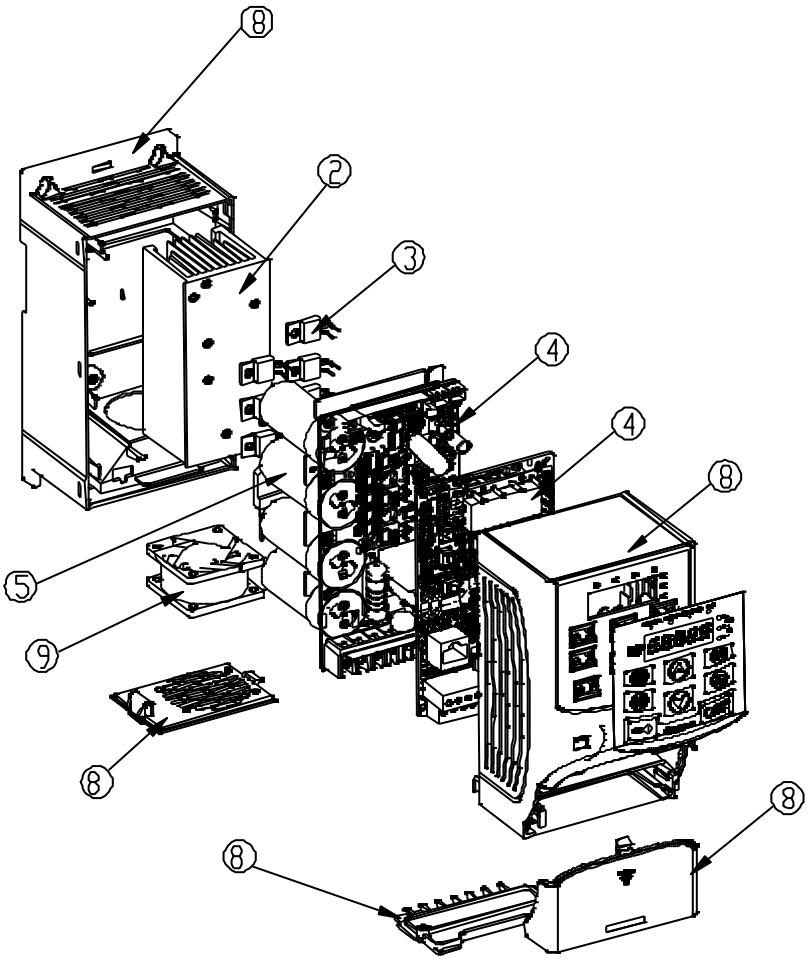

Part no.	Name	Quantity	Material	Weight (g)
2	Heat sink	1	Al-alloy (Mg, Si)	185
3	Semiconductors	8	Epoxy, Cu, Al, Si, Si gle, PBT, Pb, PPS, SiN, AIN	100
4	Printed circuit board	3	Various (FR4)	280
5	Electrolytic capacitor	3	Al, electrolytic solute	126
8	Cover parts	1	PC+ABS=Cycoloy ®	170
9	Fan	1	Various, plastic parts PBT+PA	30
13	Cables	1	PVC, Cu, GF, Sn, Au, Ni, phosphor bronze, thermoplastic polyester, glass-filled nylon	150
			Total weight	**0.9kg**

2.3 Structure of GD20 model frame size A2, A3 and A6

The main parts and components are listed in the table below.

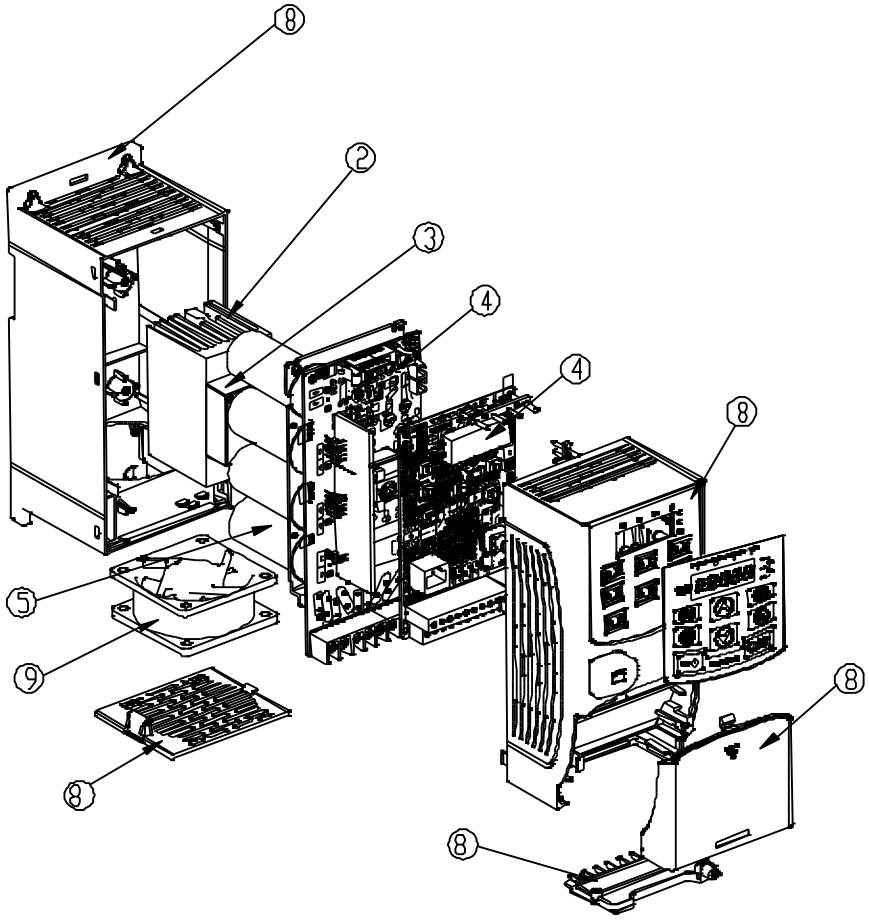

Part no.	Name	Quantity	Material	Weight (g)
2	Heat sink	1	Al-alloy (Mg, Si)	155
3	Semiconductors	1	Epoxy, Cu, Al, Si, Si gle, PBT, Pb, PPS, SiN, AIN	35
4	Printed circuit board	3	Various (FR4)	300
5	Electrolytic capacitor	4	Al, electrolytic solute	180
8	Cover parts	1	PC+ABS=Cycoloy ®	245
9	Fan	1	Various, plastic parts PBT+PA	80
13	Cables	1	PVC, Cu, GF, Sn, Au, Ni, phosphor bronze, thermoplastic polyester, glass-filled nylon	200
			Total weight	**1.0kg**

2.4 Structure of GD20 model frame size A4 and A7

The main parts and components are listed in the table below.

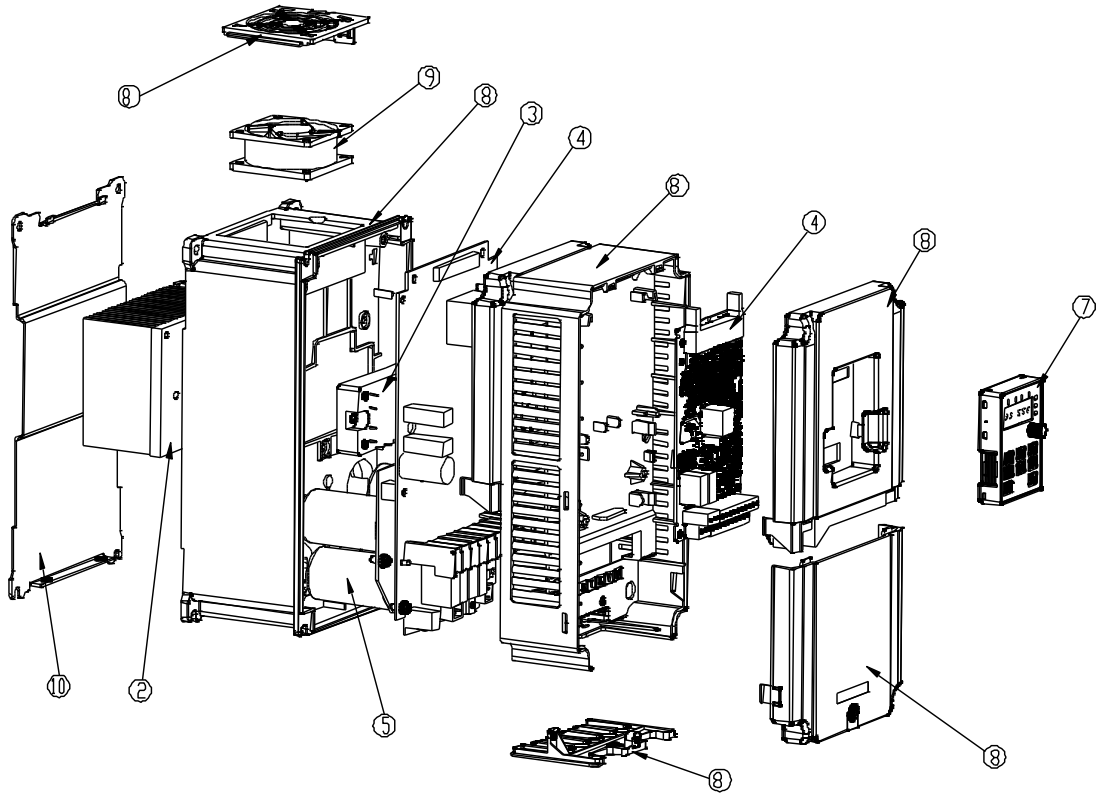

Part no.	Name	Quantity	Material	Weight (g)
2	Heat sink	1	Al-alloy(Mg, Si)	490
3	Semiconductors	1	Epoxy, Cu, Al, Si, Si gle, PBT, Pb, PPS, SiN, AIN	180
4	Printed circuit board	3	Various (FR4)	740
5	Electrolytic capacitor	4	Al, electrolytic solute	252
7	Panel	1	Various	100
8	Cover parts	1	PC+ABS=Cycoloy ®	590
9	Fan	1	Various, plastic parts PBT+PA	80
10	Sheet metal parts	1	Zn-coated steel	460
13	Cables	1	PVC, Cu, GF, Sn, Au, Ni, phosphor bronze, thermoplastic polyester, glass-filled nylon	200
			Total weight	**3.1kg**

2.5 Structure of GD20 model frame size A5 and A8

The main parts and components are listed in the table below.

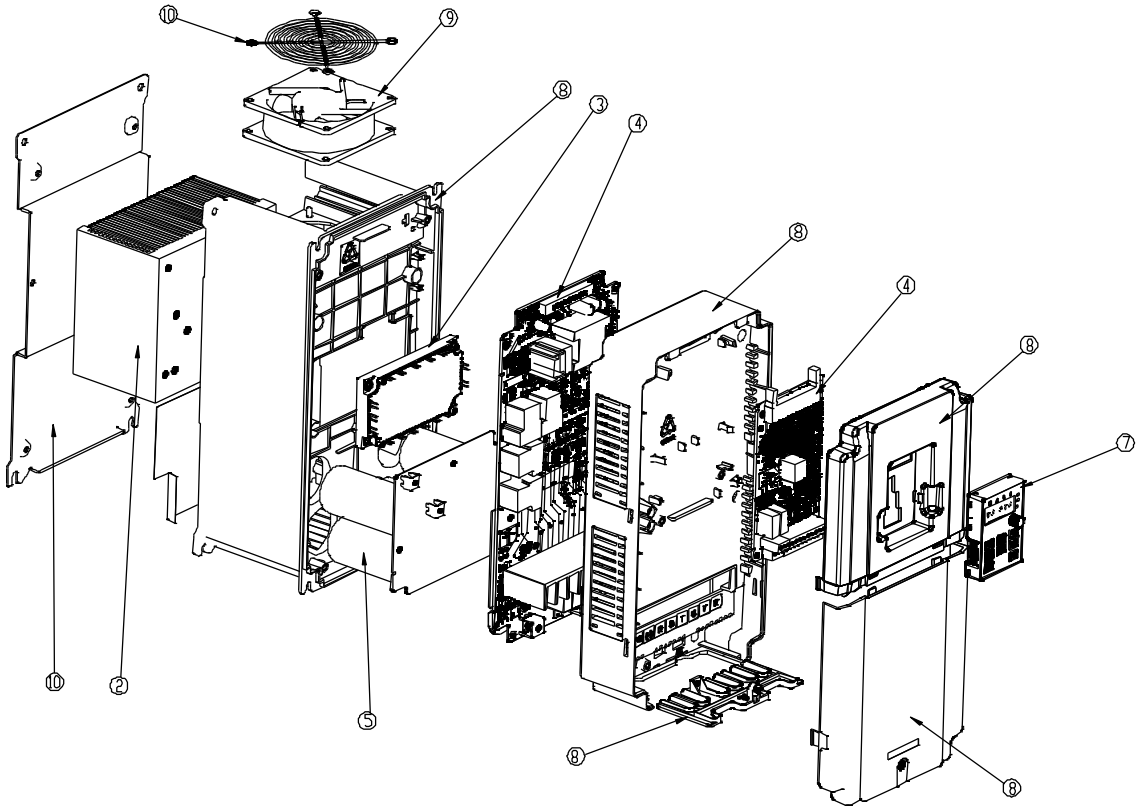

Part no.	Name	Quantity	Material	Weight (g)
2	Heat sink	1	Al-alloy (Mg, Si)	1820
3	Semiconductors	1	Epoxy, Cu, Al, Si, Si gle, PBT, Pb, PPS, SiN, AIN	250
4	Printed circuit board	3	Various (FR4)	880
5	Electrolytic capacitor	4	Al, electrolytic solute	700
6	Insulating parts	1	PC glass filler 10%/PA, GF, epoxy	5
7	Panel	1	Various	100
8	Cover parts	1	PC+ABS=Cycoloy ®	780
9	Fan	1	Various, plastic parts PBT+PA	190
10	Sheet metal parts	1	Zn-coated steel	660
13	Cables	1	PVC, Cu, GF, Sn, Au, Ni, phosphor bronze, thermoplastic polyester, glass-filled nylon	200
			Total weight	**5.6kg**

2.6 Structure of GD20 model frame size A9

The main parts and components are listed in the table below.

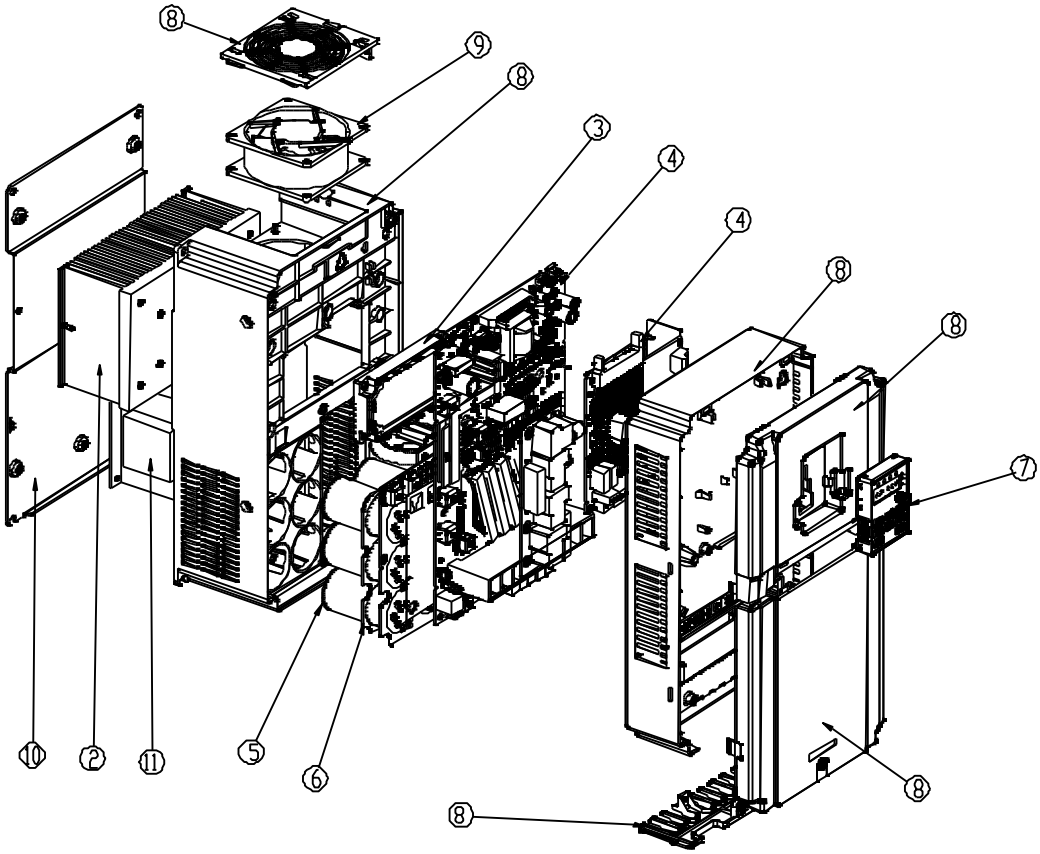

Part no.	Name	Quantity	Material	Weight (g)
2	Heat sink	1	Al-alloy (Mg, Si)	1520
3	Semiconductors	1	Epoxy, Cu, Al, Si, Si gle, PBT, Pb, PPS, SiN, AIN	300
4	Printed circuit board	4	Various(FR4)	1250
5	Electrolytic capacitor	6	Al, electrolytic solute	750
7	Panel	1	Various	100
8	Cover parts	1	PC+ABS=Cycoloy ®	940
9	Fan	1	Various, plastic parts PBT+PA	190
10	Sheet metal parts	1	Zn-coated steel	725
11	Chokes	1	Fe, Cu, Various	2500
12	Busbars	1	Sn-coated Cu	56
13	Cables	1	PVC, Cu, GF, Sn, Au, Ni, phosphor bronze, thermoplastic polyester, glass-filled nylon	200
			Total weight	**8.5kg**

2.7 Structure of GD20 model frame size A10

The main parts and components are listed in the table below.

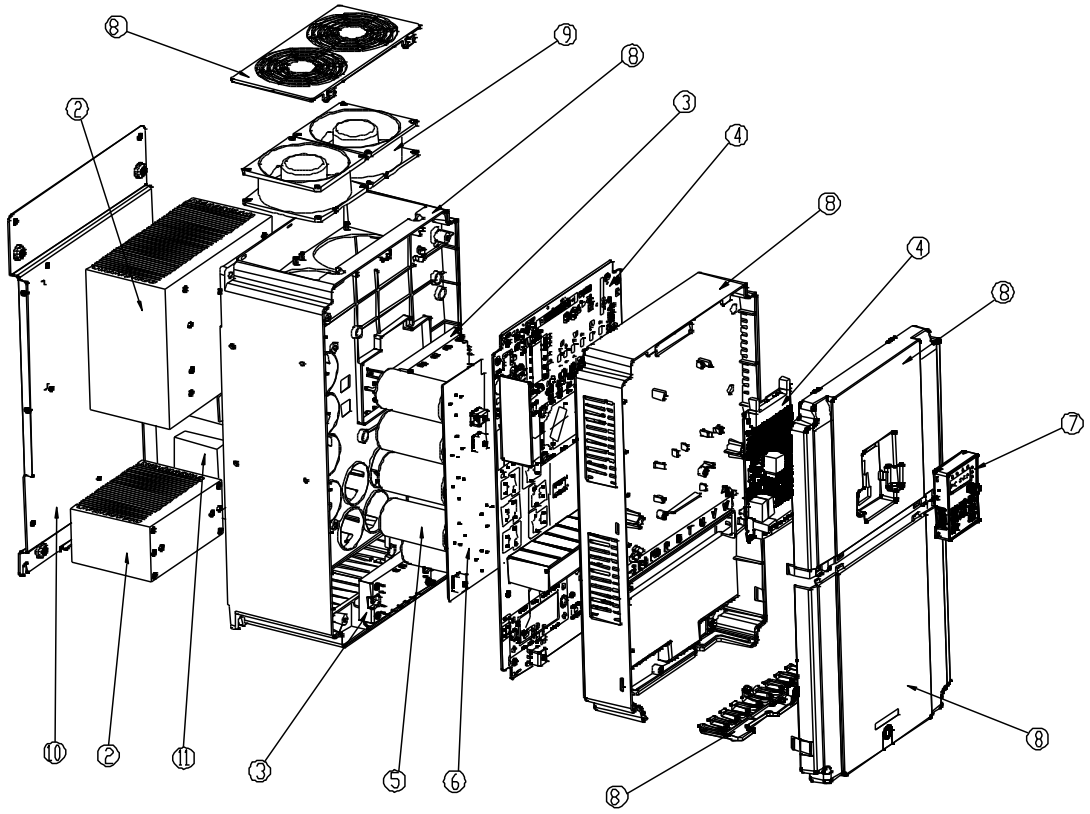

Part no.	Name	Quantity	Material	Weight (g)
2	Heat sink	2	Al-alloy(Mg, Si)	4765
3	Semiconductors	2	Epoxy, Cu, Al, Si, Si gle, PBT, Pb, PPS, SiN, AIN	500
4	Printed circuit board	3	Various(FR4)	2800
5	Electrolytic capacitor	8	Al, electrolytic solute	1200
7	Panel	1	Various	100
8	Cover parts	1	PC+ABS=Cycoloy ®	1574
9	Fan	2	Various, plastic parts PBT+PA	380
10	Sheet metal parts	1	Zn-coated steel	1214
11	Chokes	1	Fe, Cu, Various	2500
12	Busbars	1	Sn-coated Cu	180
13	Cables	1	PVC, Cu, GF, Sn, Au, Ni, phosphor bronze, thermoplastic polyester, glass-filled nylon	500
			Total weight	**16kg**

2.8 Structure of GD20 model frame size A11

The main parts and components are listed in the table below.

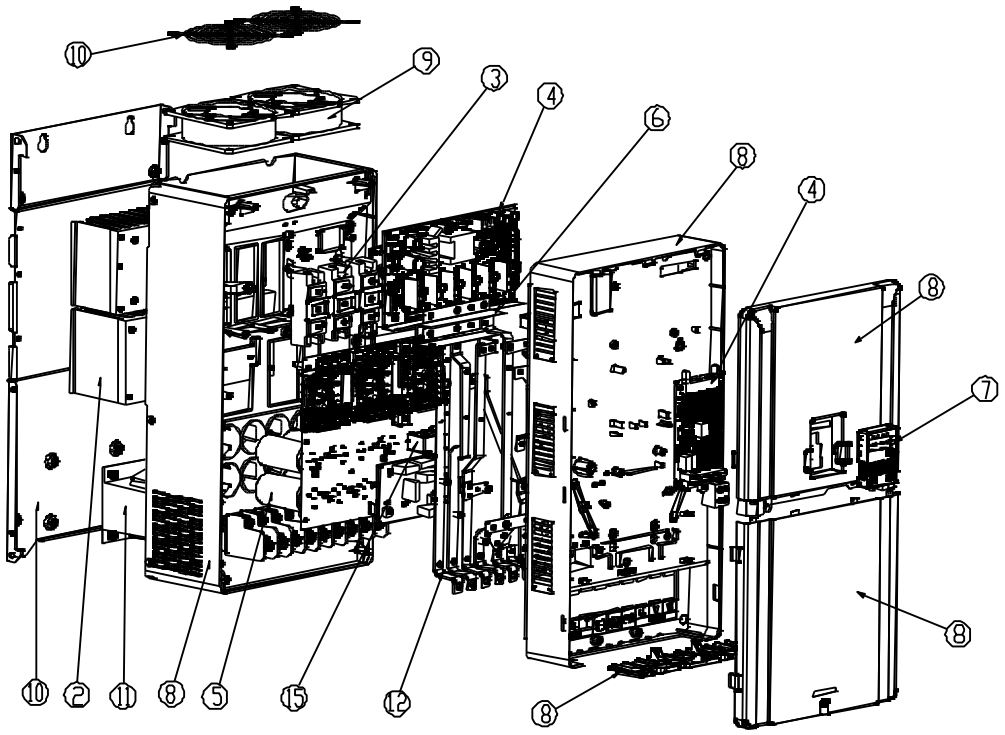

Part no.	Name	Quantity	Material	Weight (g)
1	Sheet metal parts painted	2	Polyester powder paint (Teknos CZ 8080R)	5042
2	Heat sink	1	Al-alloy(Mg, Si)	2410
3	Semiconductors	6	Epoxy, Cu, Al, Si, Si gle, PBT, Pb, PPS, SiN, AIN	726
4	Printed circuit board	6	Various(FR4)	3050
5	Electrolytic capacitor	12	Al, electrolytic solute	1800
6	Insulating parts	1	PC glass filler	18
7	Panel	1	Various	100
8	Cover parts	1	PC+ABS=Cycoloy ®	2310
9	Fan	2	Various, plastic parts PBT+PA	540
10	Sheet metal parts	2	Zn-coated steel	2450
11	Chokes	1	Fe, Cu, Various	5200
12	Busbar	1	Sn-coated Cu	1152
13	Cables	1	PVC, Cu, GF, Sn, Au, Ni, phosphor bronze, thermoplastic polyester, glass-filled nylon	500
15	Transducers	3	PC, PUR, Cu	60
			Total weight	**25kg**

2.9 Structure of GD20 model frame size A12

The main parts and components are listed in the table below.

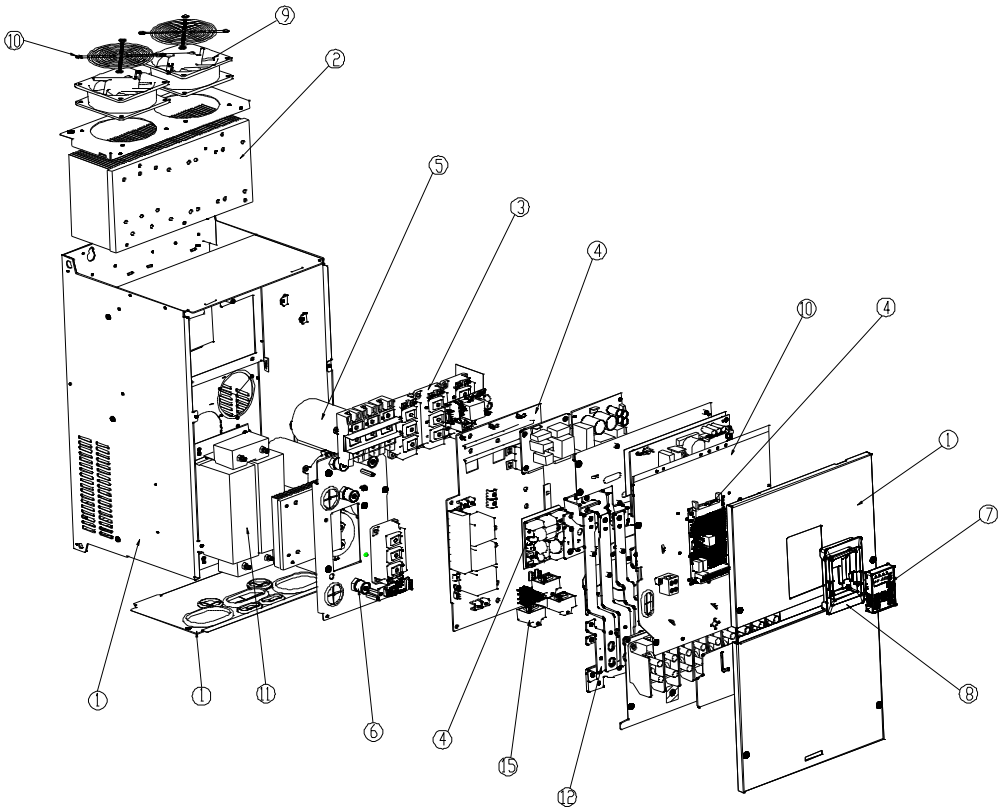

Part no.	Name	Quantity	Material	Weight (g)
1	Sheet metal parts painted	1	Polyester powder paint (Teknos CZ 8080R)	14362
2	Heat sink	1	Al-alloy (Mg, Si)	5700
3	Semiconductors	6	Epoxy, Cu, Al, Si, Si gle, PBT, Pb, PPS, SiN, AIN	1500
4	Printed circuit board	6	Various(FR4)	3700
5	Electrolytic capacitor	4	Al, electrolytic solute	4200
6	Insulating parts	1	PC glass filler, PA, GF, epoxy	13
7	Panel	1	Various	100
9	Fan	2	Various, plastic parts PBT+PA	540
11	Chokes	1	Fe, Cu, Various	7200
12	Busbar	1	Sn-coated Cu	2276
13	Cables	1	PVC, Cu, GF, Sn, Au, Ni, phosphor bronze, thermoplastic polyester, glass-filled nylon	1000
15	Transducers	3	PC, PUR, Cu	60
			Total weight	**41kg**

2.10 Materials of optional accessories

2.10.1 Filter

Voltage class	Model	Material	Weight (kg)
1-phase 220V	FLT-PS2003H-A	Iron, copper, FR4, epoxy	0.5
	FLT-LS2003H-A	Iron, copper, FR4, epoxy	
	FLT-PS2010H-A	Iron, copper, FR4, epoxy	1.0
	FLT-LS2010H-A	Iron, copper, FR4, epoxy	
3-phase 400V	FLT-P04006L-B	Iron, copper, FR4, epoxy	1.5
	FLT-L04006L-B	Iron, copper, FR4, epoxy	
	FLT-P04016L-B	Iron, copper, FR4, epoxy	2.5
	FLT-L04016L-B	Iron, copper, FR4, epoxy	
	FLT-P04032L-B	Iron, copper, FR4, epoxy	3.5
	FLT-L04032L-B	Iron, copper, FR4, epoxy	
	FLT-P04045L-B	Iron, copper, FR4, epoxy	4.0
	FLT-L04045L-B	Iron, copper, FR4, epoxy	
	FLT-P04065L-B	Iron, copper, FR4, epoxy	4.5
	FLT-L04065L-B	Iron, copper, FR4, epoxy	
	FLT-P04100L-B	Iron, copper, FR4, epoxy	9.0
	FLT-L04100L-B	Iron, copper, FR4, epoxy	9.0
	FLT-P04150L-B	Iron, copper, FR4, epoxy	9.0
	FLT-L04150L-B	Iron, copper, FR4, epoxy	
	FLT-P04240L-B	Iron, copper, FR4, epoxy	11.0
	FLT-L04240L-B	Iron, copper, FR4, epoxy	
	FLT-P04400L-B	Iron, copper, FR4, epoxy	34.0
	FLT-L04400L-B	Iron, copper, FR4, epoxy	32.0
	FLT-P04600L-B	Iron, copper, FR4, epoxy	27.0
	FLT-L04600L-B	Iron, copper, FR4, epoxy	22.0
	FLT-P04800L-B	Iron, copper, FR4, epoxy	27.0
	FLT-L04800L-B	Iron, copper, FR4, epoxy	22.0
	FLT-P041000L-B	Iron, copper, FR4, epoxy	27.0
	FLT-L041000L-B	Iron, copper, FR4, epoxy	22.0
3-phase 660V	FLT-P06050H-B	Iron, copper, FR4, epoxy	11.0
	FLT-L06050H-B	Iron, copper, FR4, epoxy	12.0
	FLT-P06100H-B	Iron, copper, FR4, epoxy	18.0
	FLT-L06100H-B	Iron, copper, FR4, epoxy	14.0
	FLT-P06200H-B	Iron, copper, FR4, epoxy	21.0
	FLT-L06200H-B	Iron, copper, FR4, epoxy	19.0
	FLT-P06300H-B	Iron, copper, FR4, epoxy	26.0
	FLT-L06300H-B	Iron, copper, FR4, epoxy	23.0
	FLT-P06400H-B	Iron, copper, FR4, epoxy	34.0
	FLT-L06400H-B	Iron, copper, FR4, epoxy	32.0
	FLT-P06600H-B	Iron, copper, FR4, epoxy	27.0
	FLT-L06600H-B	Iron, copper, FR4, epoxy	22.0
	FLT-P06800H-B	Iron, copper, FR4, epoxy	27.0
	FLT-L06800H-B	Iron, copper, FR4, epoxy	22.0
	FLT-P061000H-B	Iron, copper, FR4, epoxy	27.0
	FLT-L061000H-B	Iron, copper, FR4, epoxy	22.0

Voltage class	Model	Material	Weight (kg)
3-phase 1140V	FLT-P12050H-B	Iron, copper, FR4, epoxy	11.0
	FLT-L12050H-B	Iron, copper, FR4, epoxy	12.0
	FLT-P12100H-B	Iron, copper, FR4, epoxy	18.0
	FLT-L12100H-B	Iron, copper, FR4, epoxy	14.0
	FLT-P12200H-B	Iron, copper, FR4, epoxy	21.0
	FLT-L12200H-B	Iron, copper, FR4, epoxy	19.0
	FLT-P12300H-B	Iron, copper, FR4, epoxy	26.0
	FLT-L12300H-B	Iron, copper, FR4, epoxy	23.0
	FLT-P12400H-B	Iron, copper, FR4, epoxy	34.0
	FLT-L12400H-B	Iron, copper, FR4, epoxy	32.0
	FLT-P12600H-B	Iron, copper, FR4, epoxy	27.0
	FLT-L12600H-B	Iron, copper, FR4, epoxy	22.0
	FLT-P12800H-B	Iron, copper, FR4, epoxy	27.0
	FLT-L12800H-B	Iron, copper, FR4, epoxy	22.0
	FLT-P121000H-B	Iron, copper, FR4, epoxy	27.0
	FLT-L121000H-B	Iron, copper, FR4, epoxy	22.0

2.10.2 Reactor

2.10.2.1 Input reactor

Model in the operation manual	Main material (electromagnetic wire, silicon steel sheet and insulation)	Weight (kg)
ACL2-1R5-4	Copper, 50w470, frame	2.6
ACL2-2R2-4	Copper, 50w470, frame	2.8
ACL2-004-4	Copper, 50w470, frame	2.8
ACL2-5R5-4	Copper, 50w470, frame	3.3
ACL2-7R5-4	Copper, 50w470, frame	3.0
ACL2-011-4	Copper, 50w470, frame	4.8
ACL2-015-4	Copper, 50w470, frame	5.0
ACL2-018-4	Copper, 50w470, frame	7.6
ACL2-022-4	Copper, 50w470, frame	8.0
ACL2-030-4	Copper, 50w470, frame	8.0
ACL2-037-4	Copper, 50w470, frame	8.0
ACL2-045-4	Copper, 50w470, frame	11.8
ACL2-055-4	Al, 50W470, NM insulation paper	14.8
ACL2-075-4	Al, 50W470, NM insulation paper	20.1
ACL2-110-4	Al, 50W470, NM insulation paper	23.3
ACL2-132-4	Al, 50W470, NM insulation paper	29.4
ACL2-160-4	Al, 50W470, NM insulation paper	29.4
ACL2-200-4	Al, 50W470, NMN insulation paper	33.3
ACL2-250-4	Al, 50W470, NMN insulation paper	45.3
ACL2-280-4	Al, 50W470, NM insulation paper	45.5
ACL2-315-4	Al, 50W470, NM insulation paper	49.5
ACL2-350-4	Al, 50W470, NM insulation paper	53.6
ACL2-400-4	Al, 50W470, NM insulation paper	70.0
ACL2-500-4	Al, 50W470, NMN insulation paper	69.6
ACL2-630-4	Al, 50W470, NMN insulation paper	92.0

2.10.2.2 Output reactor

Model in the operation manual	Main material (electromagnetic wire, silicon steel sheet and insulation)	Weight (kg)
OCL2-1R5-4	Copper, 50w470, frame	2.4
OCL2-2R2-4	Copper, 50w470, frame	2.7
OCL2-004-4	Copper, 50w470, frame	2.6
OCL2-5R5-4	Copper, 50w470, frame	3.2
OCL2-7R5-4	Copper, 50w470, frame	3.8
OCL2-011-4	Copper, 50w470, frame	5.5
OCL2-015-4	Copper, 50w470, frame	5.5
OCL2-018-4	Copper, 50w470, frame	5.6
OCL2-022-4	Copper, 35w310, frame	6.6
OCL2-030-4	Copper, 30Q120, frame	6.2
OCL2-037-4	Copper, 30Q120, frame	6.5
OCL2-045-4	Copper, 35w310, frame	11.4
OCL2-055-4	Al, 35W310, NM insulation paper	16.3
OCL2-075-4	Al, 35W310, NM insulation paper	19.4
OCL2-110-4	Al, 35W310, NM insulation paper	19.6
OCL2-132-4	Al, 35W310, NM insulation paper	24.4
OCL2-160-4	Al, 35W310, NM insulation paper	27.4
OCL2-200-4	Al, 35W310, NM insulation paper	27.0
OCL2-250-4	Al, 30Q120, NMN insulation paper	40.8
OCL2-280-4	Al, 35W310, NM insulation paper	37.9
OCL2-315-4	Al, 35W310, NM insulation paper	44.2
OCL2-350-4	Al, 30Q120, NM insulation paper	46.0
OCL2-400-4	Al, 35W310, NM insulation paper	48.0
OCL2-500-4	Al, 30Q120, NM insulation paper	62.1
OCL2-630-4	Al, Z10-0.27, NMN insulation paper	80.0

The materials of screws used in GD20 series products: carbon steel, zinc coating

Definition of terms for plastic and rubber materials	
ABS	Acrylonitrile-butadiene-styrene
GF	Glass fiber
PA	Polyamide
PBT	Polybutylene terephthalate
PP	Polypropylene
PC	Polycarbonate
PPS	Polyphenylene sulfide
PUR	Polyurethane
PVC	Polyvinyl chloride

2.11 Package

The product package is made of corrugated board or plywood.

The plastic cover of the package is made from PE-LD and tied up by PP ribbon. The optional boards are packed into the protective bag made from PE-LD.

Users can recycle all the materials used in the package.

In order to prevent pollutions caused by repetitive transportation, the factory will not take back used packages. Users can contact local INVT offices for more recycling instructions.

Package recycling is recommended as it is conducive to preserve the raw materials and reduce industrial waste.

2.12 Operation manuals and brochures

To save natural resources and reduce paper consumption, INVT has uploaded all the operation manuals and brochures onto the official website for users to download as needed.

3 Manufacturing and application

3.1 Manufacturing

INVT has implemented a company-wide management system integrated with quality, environment and vocational health and safety. This system is certified by ISO9001:2015, ISO14001:2015 and OHSAS 18001:2007 and applied to all the departments..

3.2 Application

The application of drives is beneficial to the environment, for instance:

- Save energy and reduce cost;
- Improve process control;
- Reduce repair/maintenance needs.

4 Disposal

4.1 Contents of this chapter

This chapter describes instructions for product disposal.

4.2 Product disposal

The main body of the machine can be recycled to save natural resources and energy. The parts and materials should be dismantled and separated.

Generally, all the metals (such as steel, Al, copper, copper alloy and precious metal) can be recycled, while plastic, rubber and other packing material may be used in energy recycle.

PCBs (Printed circuit board) and DC capacitors should be disposed of in a proper manner in accordance with IEC 62635 instructions.

All the plastic parts are marked with identification code for the convenience of recycling.

The product disposal shall comply with international and national laws and regulations

4.3 Dismantle

The machine can be dismantled manually or mechanically. This chapter introduces in details these two dismantling modes.

4.4 Manual dismantle

The materials dismantled manually can be classified into the following categories based on the material content.

- Ferrous metal (plates, screws)
- Al (heat sink)
- Copper (bus)
- Plastic
- PCBs
- Electrolytic capacitor
- Others

Users can recycle the metal parts (iron and Al) and most of other materials in accordance with local regulations.

See *List of prohibited and restricted substances* for more details.

4.5 Mechanical dismantle

The machine can be shredded mechanically by shredding machine, and the shredded materials can be sorted out with professional sorting process.

User should remove the harmful materials inside the machine before mechanical shredding. See *List of*

prohibited and restricted substances for more details.

4.6 List of prohibited and restricted substances

This list aims to comply with legislation to avoid the use of chemical substances which may generate hazards to the environment or health.

The “prohibited substance” refers to the substances prohibited to be used; “restricted substance” refers to the substances whose use should be limited within INVT.

The definition and regulation concerning hazardous substances vary in countries and are likely to change when knowledge of materials increase. The materials used in the product are materials generally used in electrical and electronic equipment.

4.6.1 Reference

1. Directive 2011/65/EU of the European Parliament and of the Council of 8 June 2011 on the restriction of the use of certain hazardous substances in electrical and electronic equipment (RoHS II).
2. Regulation No 1907/2006/EC of the European Parliament and of the Council of 18 December 2006 concerning the Registration, Evaluation, Authorization and Restriction of Chemicals (REACH):
   - Annex XIV: List of substances subject to authorization
   - Annex XVII: Restrictions on use of substances in articles
   - SVHC: Candidate list of substances of very high concern for authorization.
3. Directive 2012/19/EU of the European Parliament and of the Council of 4 July 2012 on waste electrical and electronic equipment (WEEE).

4.7 Recycling information conforming to WEEE

The wheelie bin symbol indicates this product will enter recycling system at the end of life.

Users should dispose of the product in appropriate collection location. Do not discard the product in normal waste stream.

The wheelie bin symbol shown below indicates separate collection for electrical and electronic equipment (EEE)

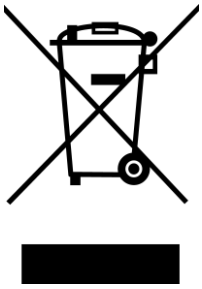

The horizontal bar underneath the wheelie bin indicates the equipment is manufactured after the directive come into effect in 2005.

The wheelie bin symbol is added to the type designation key of the product since 2018

Please refer to the example below.

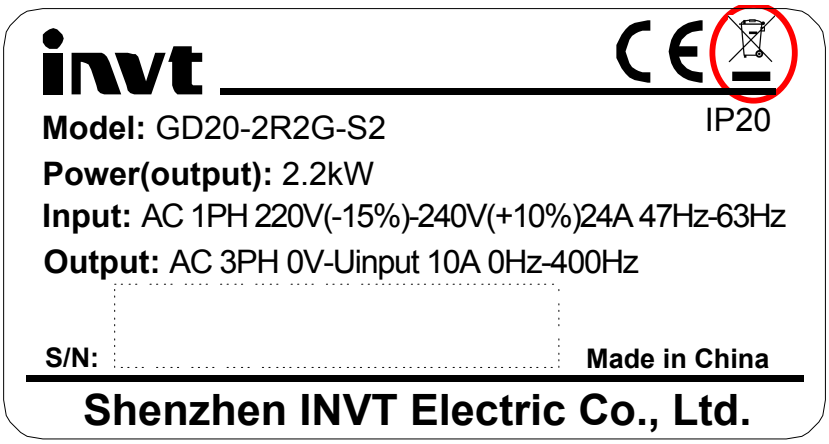

4.8 Recycling instance

This instance complies with the typical national regulations effective at the time of publishing this manual.

Materials	Recycling mode
Aluminum	Recycled as material
Cables	Recycles as material
Copper	Recycled as material
Ceramics	Landfilled
Electrolytic capacitors	Recycled as WEEE
Plastics	Energy recycling (incineration)
Printed circuit boards	Recycled as WEEE
Steel	Recycles as material
Other materials	Energy recycling (incineration)

Further Information

Product and service inquiries

Address any inquiries about the product to your local INVT offices, quoting the type designation and serial number of the unit in question. A listing of INVT sales, support and service contacts can be found by navigating to www.invt.com.cn.

Feedback of INVT Inverters manuals

Your comments on our manuals are welcome. Go to www.invt.com.cn, directly contact online service personnel or choose Contact Us to obtain contact information.

Document library on the Internet

You can find manuals and other product documents in PDF format on the Internet. Go to www.invt.com.cn and choose Service and Support > Data Download.